TIMEX 2068
TECHNICAL MANUAL

TIMEX SINCLAIR 2068
PERSONAL COLOR COMPUTER

TECHNICAL REFERENCE MANUAL

Prepared by

V. C. Corcoran
and
M. H. Branigin

TIMEX COMPUTER CORPORATION
Waterbury CT 06720

Copyright
May 1984

PREFACE

This manual is dedicated to the many individuals associated with the Timex Computer Corporation in the development and production of the TS2068. Our special thanks to Nan Parsons who prepared the TS2068 Schematic and other drawings used in this manual.

While every effort has been made to make this document complete and accurate, use of the technical information contained herein is at user's sole risk. Timex Corporation or its affiliates assume no responsibility or liability for the safety or performance of any product manufactured relying on the technical data contained herein, or any liability, loss, damage, or expense sustained by reason of any claim that such products infringe any patent or other industrial property right.

TABLE OF CONTENTS

1.0 INTRODUCTION

1.1 TS 2068 Overview

- 1.1.1 Hardware Overview
- 1.1.2 System Software Overview
- 1.1.3 Cartridge Software Overview

2.0 HARDWARE GUIDE

2.1 Major Hardware Functions

- 2.1.1 AC Adapter
- 2.1.2 Voltage Regulation
- 2.1.3 Z80A CPU
- 2.1.4 ROM
- 2.1.5 32K RAM
- 2.1.6 Programmable Sound Generator
- 2.1.7 Joystick Port
- 2.1.8 Control Logic
- 2.1.9 Keyboard
- 2.1.10 16K Video Display RAM
- 2.1.11 Video Generation
- 2.1.12 Cassette I/O
- 2.1.13 Port Map

2.2 Schematic

2.3 Unit Absolute Ratings

2.4 Interfaces and Connectors

- 2.4.1 System Bus Connector - P1-RGB Connections
- 2.4.2 Cartridge Connector - J4
- 2.4.3 Cassette I/O
- 2.4.4 Joystick
- 2.4.5 Composite Monitor Output
- 2.4.6 RF Output
- 2.4.7 Keyboard Interface Connector - J9
- 2.4.8 AC Adapter Power Plug

3.0 SYSTEM SOFTWARE GUIDE

3.1 Identifier

TABLE OF CONTENTS

(continued)

3.2 ROM Organization and Services

- 3.2.1 Home ROM
  - 3.2.1.1 Fixed Entry Points
  - 3.2.1.2 BASIC AROS Support
  - 3.2.1.3 General
- 3.2.2 Extension ROM
  - 3.2.2.1 Fixed Entry Points
  - 3.2.2.2 General
  - 3.2.2.3 Video Mode Change Service
  - 3.2.2.4 Extension ROM Interface Routine

3.3 RAM Organization and Services

- 3.3.1 System Variables
- 3.3.2 System Configuration Table
- 3.3.3 Machine Stack
- 3.3.4 OS RAM Routines
  - 3.3.4.1 RAM Interruption Handler
  - 3.3.4.2 RAM Service Routines
  - 3.3.4.3 Function Dispatcher

4.0 SYSTEM I/O GUIDE

4.1 I/O Channels

- 4.1.1 Keyboard
- 4.1.2 Video Screen
- 4.1.3 2040 Dot Matrix Printer

4.2 Cassette Tape
4.3 Joysticks
4.4 Software Generated Sound (BEEP)
4.5 Programmable Sound Chip (SOUND)

5.0 ADVANCED CONCEPTS

5.1 Cartridge Software/Hardware-PCB Layout for EPROM Board

5.2 Advanced Video Modes

5.3 Other

TABLE OF CONTENTS

(continued)

6.0 KNOWN "BUGS" AND CORRECTIONS

6.1 LROS and Machine Code AROS
6.2 Machine Code AROS
6.3 BASIC AROS
6.4 Video Mode Change Service
6.5 OS RAM Routines
6.6 General

APPENDICES

Appendix A - System ROM Maps/OS RAM Module
Appendix B - System Variables Definition File
Appendix C - Application Development Library

C-1 64-Column Mode
C-2 80-Column Mode
C-3 40-Column Mode
C-4 Dual Screen Mode
C-5 Sprite Support Package

Appendix D -

D-1 TS2068 PCB Assembly Drawing
D-2 TS2068 Parts List
D-3 TS2068 Schematic Diagram

LIST OF FIGURES

FIGURE NO.	TITLE
1.1-1	TS 2068 Block Diagram
1.1-2	Memory Configuration
1.1-3	RAM Mapping
1.1-4	System Initialization Flowchart
2.1.3-1	CPU Timing
2.1.3-2	Op Code Fetch Timing
2.1.3-3	Memory Read/Write Timing
2.1.3-4	I/O Read/Write Timing
2.1.3-5	Interrupt Request/Ack.Cycle
2.1.4-1	Rework for EPROM's
2.1.6-1	PSG Register Block Diagram
2.1.6-2	Tone Period Registers
2.1.6-3	Noise Period Register
2.1.6-4	Mixer Control-I/O Enable Reg.
2.1.6-5	D/A Converter Signal Generation
2.1.6-6	Amplitude Control Registers
2.1.6-7	Variable Amplitude Control
2.1.6-8	Envelope Period Registers
2.1.6-9	Envelope Shape/Cycle Control Reg.
2.1.6-10	Envelope Generator Output
2.1.6-11	Envelope Generator Output Detail
2.1.7-1	Joystick Port Operation
2.1.8-1	Bank Selection Logic
2.1.8-2	Video RAM Address Generation
2.1.9-1	Keyboard Schematic
2.1.10-1	Video RAM Data Organization
2.1.11-1	Composite Video Signal
2.4.1-1	P1 Mating Connector Mechanical Requirements
2.4.1-2	P1 Signal Layout
2.4.1-3	RGB Monitor Connection Schematic
2.4.2-1	J4 Mating Connector Mechanical Requirements
2.4.2-2	J4 Signal Layout
2.4.4-1	Joystick Connector
2.4.8-1	AC Adapter Plug
3.2.2-1	Ext.ROM Interruption Fielder
3.2.2-2	Ext.ROM Interface Routine
4.1.1-1	Keyboard Mode Control
4.1.1-2	Keyboard Support Routines Flowcharts
4.1.2-1	Standard Character Table Locations
4.1.2-2	Screen Row/Column Designations
4.2-1	Tape Header Formats
4.3-1	Joystick Data Format

LIST OF FIGURES
(continued)

FIGURE NO.	TITLE
5.1-1	EPROM Cartridge Board Schematic
5.1-2	Ctdg.Bd.Component Side Artwork
5.1-3	Ctdg.Bd.Solder Side Artwork
5.1-4	EPROM Cartridge Bd. Solder Mask
6.5-1	GET_STATUS Corrections
6.5-2	PUT_WORD Corrections
6.5-3	BANK_ENABLE and RESTORE_STATUS Corrections

LIST OF TABLES

TABLE NO.	TITLE
2-1	Z80A Control Signals
2.1.6-1	PSG I/O Enable Truth Table
2.1.6-2	PSG I/O Port Truth Table
2.1.8-1	SCLD I/O Pin Function Definitions
2.1.13-1	I/O Port Map
2.4.1-1	P1 Signal Definitions
2.4.1-2	P1 Signal Electrical Characteristics
2.4.2-1	J4 Signal Definitions
2.4.2-2	J4 Signal Electrical Characteristics
2.4.4-1	Joystick Connector Signal Assignment
3.2.2-1	Inputs to Video Mode Change Service
3.3.4-1	OS RAM Service Routines
3.3.4-2	Function Dispatcher Services

1.0 INTRODUCTION

This manual provides detailed technical information on the Timex Sinclair 2068 Personal Color Computer. In conjunction with the TS2068 User Manual, it is intended to assist the reader in understanding the architecture, hardware and software features, programming techniques and I/O techniques pertaining to the TS2068.

1.1 TS2068 Overview

1.1.1 Hardware Overview

Figure 1.1-1 is a block diagram of the TS2068 showing the major functional components and their logical connections. These components are:

Control Logic	- SCLD (Standard Cell Logic Device)
CPU	- Z80A Microprocessor
RAM	- 48K Random Access Memory
ROM	- 24K System Read-Only Memory (16K plus 8K Extension)

System Bus Connector
Cartridge Connector
Sound Generator/Speaker
Video Circuits
Cassette READ/WRITE
Joystick Connectors

The TS2068 Cartridge Connector provides for the plug-in of cartridges containing programmed ROM's with up to 64K of addressable memory. The full 64K is not normally utilized (e.g., due to need for access to RAM for the machine stack). See Section 5.1 for details.

Figure 1.1-2 shows the standard TS2068 memory configuration comprised of the Home Bank, the ROM Extension Bank and the Dock (Cartridge) Bank. This memory is selectable as eight 8K 'chunks' with the Home Bank being enabled by default, i.e., any chunk not selected in the Extension or Dock Bank is automatically enabled in the Home Bank.

Memory selection and I/O are controlled via the I/O ports. These topics are covered in detail in later sections.

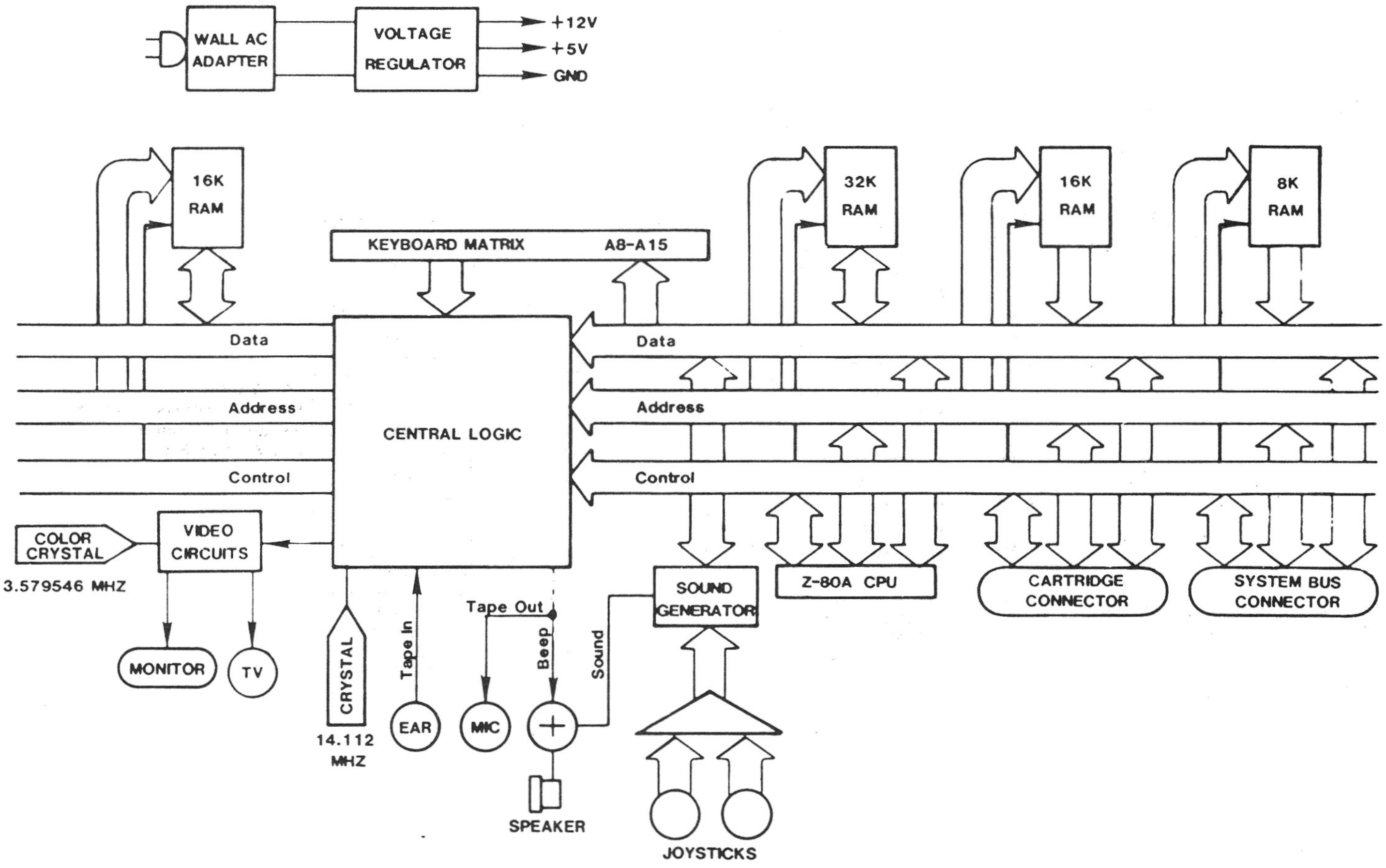
WALL AC ADAPTER
VOLTAGE REGULATOR
+12V
+5V
GND
16K RAM
32K RAM
16K RAM
8K RAM
KEYBOARD MATRIX
A8-A15
Data
Address
Control
CENTRAL LOGIC
Data
Address
Control
COLOR CRYSTAL
3.579546 MHZ
VIDEO CIRCUITS
MONITOR
TV
CRYSTAL
14.112 MHZ
Tape In
EAR
Tape Out
MIC
Beep
Sound
SPEAKER
SOUND GENERATOR
JOYSTICKS
Z-80A CPU
CARTRIDGE CONNECTOR
SYSTEM BUS CONNECTOR

Figure 1.1-1. TS 2068 BLOCK DIAGRAM

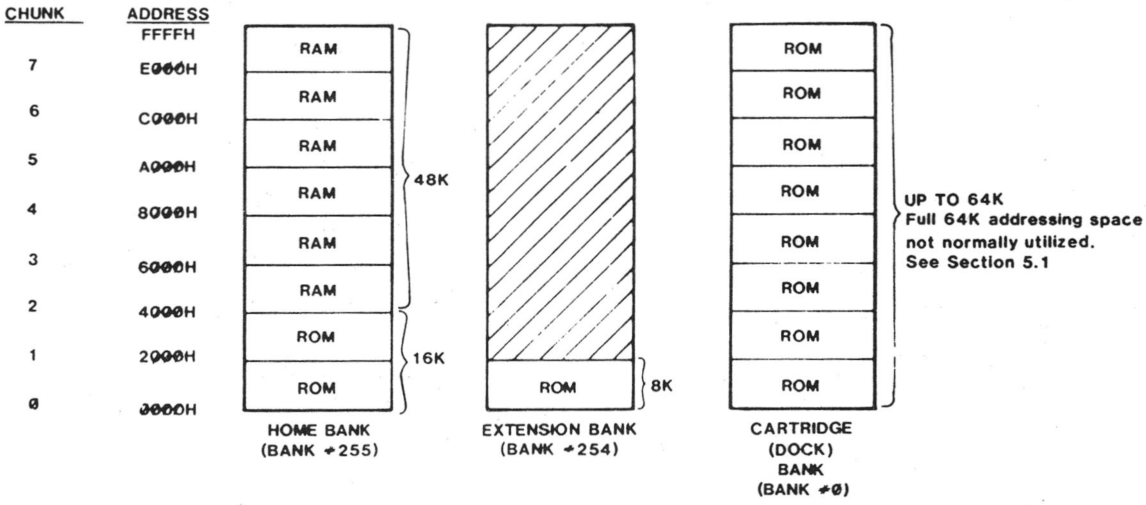
CHUNK
ADDRESS
FFFFH
7
E000H
6
C000H
5
A000H
4
8000H
3
6000H
2
4000H
1
2000H
0
0000H
RAM
RAM
RAM
RAM
RAM
RAM
ROM
ROM
48K
16K
HOME BANK
(BANK #255)
ROM
8K
EXTENSION BANK
(BANK #254)
ROM
ROM
ROM
ROM
ROM
ROM
ROM
ROM
CARTRIDGE
(DOCK)
BANK
(BANK #0)
UP TO 64K
Full 64K addressing space
not normally utilized.
See Section 5.1

Figure 1.1-2. TS 2068 STANDARD MEMORY CONFIGURATION

1.1.2 System Software Overview

The TS2068 System Software resides in the Home ROM, the Extension ROM, and dedicated RAM. It supports the following functions:

- System Initialization
- BASIC Interpreter (including BASIC cartridge support)
- BASIC I/O for Standard Peripherals
  - o keyboard
  - o video screen
  - o 2040 32-col. dot matrix printer
  - o cassette tape
  - o joysticks
  - o software generated sound (BEEP)
  - o programmable sound chip (SOUND)
- Video Mode Change Service
- Interruption Servicing (Z80 Int. Mode 1)
- Bank Switching/Data Transfer Services
- Function Dispatcher (provides access to selected system routines via a Service Code input)

In addition, portions of the Home Bank RAM are used for the machine stack, the BASIC system variables, the Printer Buffer and the Display Files. Figure 1.1-3 shows the standard mapping of the Home Bank RAM and the mapping necessary when the second display file is to be used with the BASIC interpreter still functional. The Video Mode Change Service routine makes these memory modifications. Note that there is no direct support of the second display file via BASIC or in the system ROM I/O routines.

Figure 1.1-4 is a Flowchart of the System Initialization process.

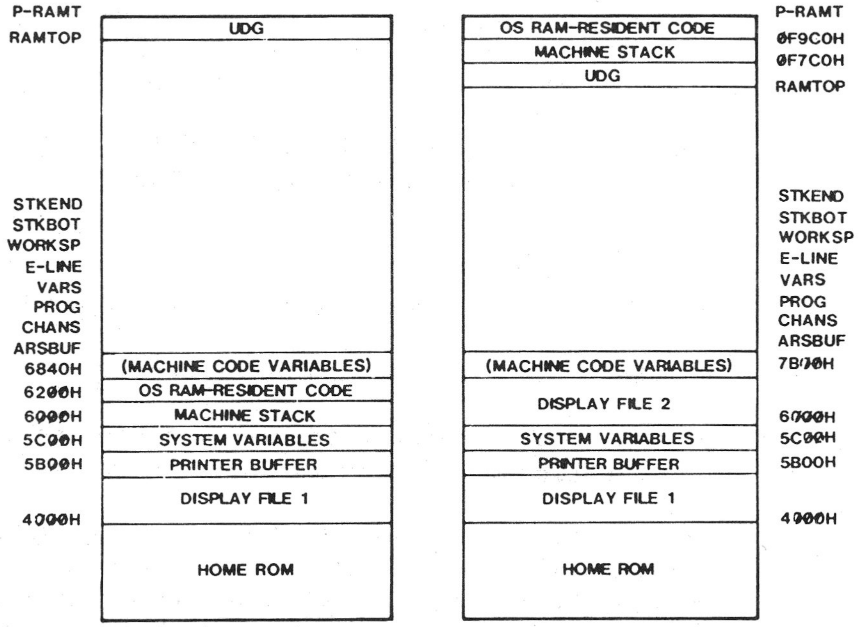
P-RAMT
RAMTOP
UDG
STKEND
STKBOT
WORKSP
E-LINE
VARS
PROG
CHANS
ARSBUF
6840H
(MACHINE CODE VARIABLES)
6200H
OS RAM-RESIDENT CODE
6000H
MACHINE STACK
5C00H
SYSTEM VARIABLES
5B00H
PRINTER BUFFER
DISPLAY FILE 1
4000H
HOME ROM
OS RAM-RESIDENT CODE
P-RAMT
MACHINE STACK
0F9C0H
UDG
0F7C0H
RAMTOP
STKEND
STKBOT
WORKSP
E-LINE
VARS
PROG
CHANS
ARSBUF
(MACHINE CODE VARIABLES)
7B00H
DISPLAY FILE 2
6000H
SYSTEM VARIABLES
5C00H
PRINTER BUFFER
5B00H
DISPLAY FILE 1
4000H
HOME ROM

A) 1 Display File

B) 2 Display File

Figure 1.1-3. HOME BANK RAM

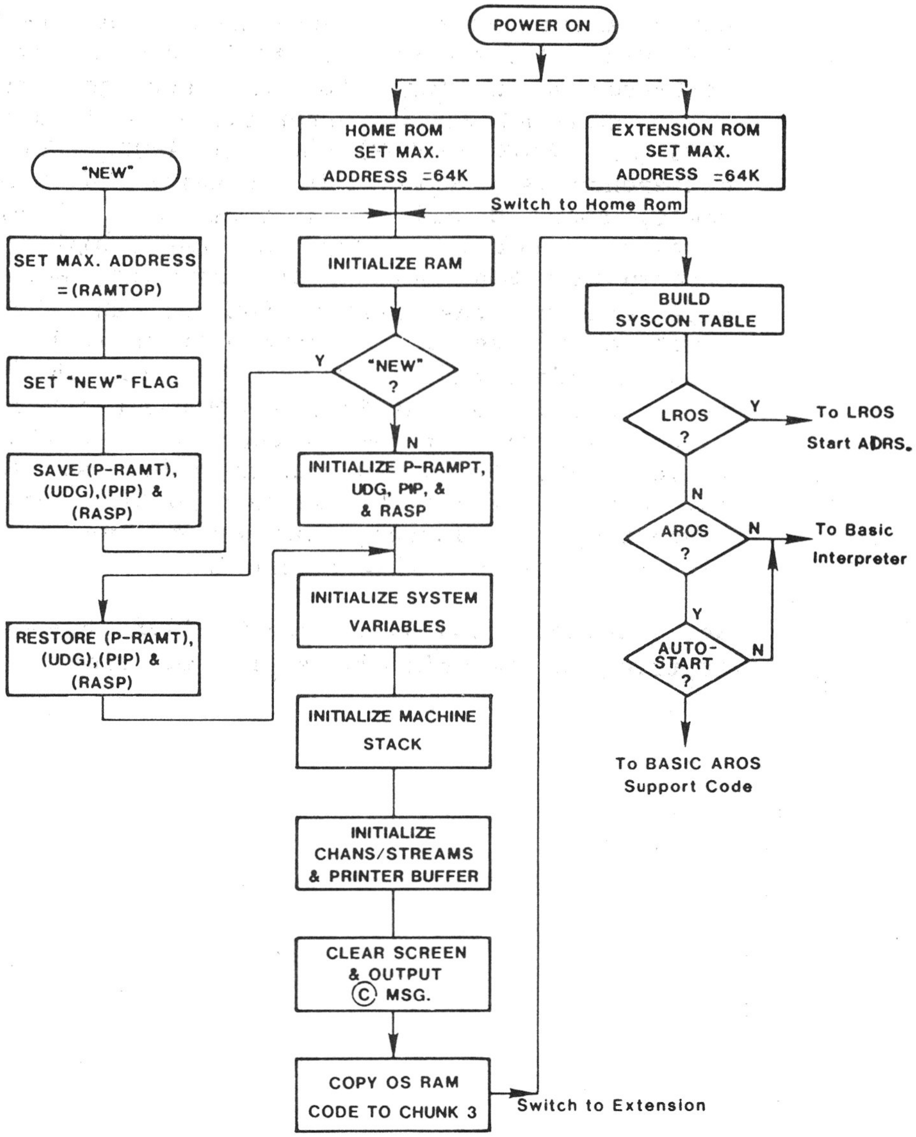
POWER ON
HOME ROM SET MAX. ADDRESS =64K
EXTENSION ROM SET MAX. ADDRESS =64K
"NEW"
Switch to Home Rom
SET MAX. ADDRESS =(RAMTOP)
INITIALIZE RAM
BUILD SYSCON TABLE
SET "NEW" FLAG
Y
"NEW" ?
N
LROS ?
Y
To LROS Start ADRS.
SAVE (P-RAMT), (UDG),(PIP) & (RASP)
INITIALIZE P-RAMPT, UDG, PIP, & & RASP
N
AROS ?
N
To Basic Interpreter
INITIALIZE SYSTEM VARIABLES
Y
RESTORE (P-RAMT), (UDG),(PIP) & (RASP)
AUTO-START ?
N
INITIALIZE MACHINE STACK
To BASIC AROS Support Code
INITIALIZE CHANS/STREAMS & PRINTER BUFFER
CLEAR SCREEN & OUTPUT © MSG.
COPY OS RAM CODE TO CHUNK 3
Switch to Extension

Figure 1.1-4. SYSTEM INITIALIZATION

1.1.3 Cartridge Software Overview

The TS2068 supports two basic types of Cartridge or ROM-Oriented Software designated as LROS (Language ROM-ORiented Software) and AROS (Application ROM-Oriented Software) which plug into the cartridge connector. They are identified via overhead bytes at Location 0 for an LROS or 32768 (8000H) for an AROS. The fundamental difference is that an LROS contains Z80 machine code in memory chunk 0 and is in total control of the TS2068 hardware including the RESTART implementation and Interruption Mode setting and handling, while an AROS is dependent on the System ROM or an LROS for these functions if needed. An AROS written in BASIC, which may also include machine code accessed via the USR function, is supported from the System ROM BASIC Interpreter and is mapped beginning in memory chunk 4. An AROS may also be written entirely in Z80 machine code. An AROS written in any other high-level language would require an LROS supporting that language and would have to be integrated with the LROS in a single cartridge.

See Sections 3.2.1.2, BASIC AROS Support and 5.1, Cartridge Software/Hardware, for additional details.

2.0 HARDWARE GUIDE

2.1 Description of Major Hardware Functions

Figure 1.1-1 shows a simplified block diagram of the TS2068. The following functional units are described in the following sections:

SECTION	FUNCTIONAL UNIT
2.1.1	AC Adapter
2.1.2	Voltage Regulation
2.1.3	Z-80A CPU
2.1.3.1	Address Bus
2.1.3.2	Data Bus
2.1.3.3	Control Signals
2.1.3.4	OP Code Fetch
2.1.3.5	Memory READ/WRITE
2.1.3.6	I/O READ/WRITE
2.1.3.7	Maskable Interruption
2.1.3.8	Non-Maskable Interruption (NMI)
2.1.4	ROM
2.1.5	32K RAM
2.1.6	Sound Generator
2.1.7	Joystick Port
2.1.8	Control Logic
2.1.8.1	Bank Selection Logic
2.1.8.2	Z80 Clock Generator
2.1.8.3	Display File Access
2.1.8.4	Interruption Generation
2.1.9	Keyboard
2.1.10	16K Video Display RAM
2.1.11	Video Generation
2.1.11.1	Composite Video
2.1.11.2	RF Modulator
2.1.12	Cassette I/O
2.1.13	Port Map

2.1.1 AC Adapter

The AC Adapter transforms 117V AC (Nominal) to filtered DC via a step down transformer, full-wave bridge rectifier, and filter capacitor to supply from 14 to 25 volts at 1 amp over the AC voltage variation range of 105 to 130 V AC. Transformer isolation exceeds 1500 volts.

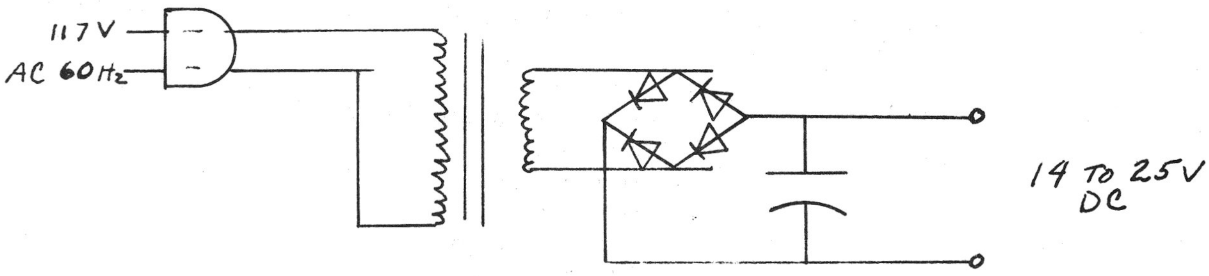

2.1.2 Voltage Regulation

Unregulated DC from the AC Adapter is supplied for regulation through a bi-filar torroidal inductor which reduces conducted line emanation for FCC compliance and through the power-ON/OFF switch located on the left side of the TS2068. This switch voltage is supplied to the System Bus Connector (see Section 2.4) and for regulation to the +12 V regulator and the +5 V regulator. Characteristics are as follows:

SUPPLY	VOLTAGE RANGE	CURRENT RANGE
5V	4.75 - 5.25V	200ma - 1.0 A
12V	11.5 - 12.5V	20ma - 100ma

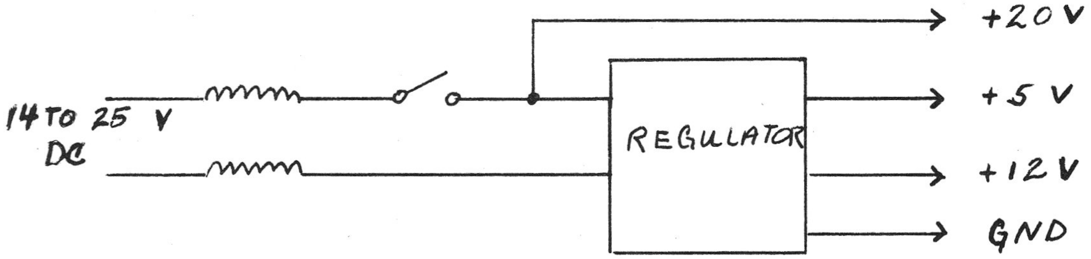

The 12V regulator is a 78L12 series regulator while the 5V regulator is a switching supply utilizing the 78S40 circuit.

2.1.3 Z-80A CPU

The Z-80A CPU of the TS2068 operates at a clock frequency of 3.53 MHz. Primary features of this CPU are:

158 instructions
Dual register set
Two index registers
On-chip refresh logic

The Z-80 CPU executes instructions by proceeding through a sequence of operations that include:

a) instruction Op code fetching
b) READ or WRITE memory
c) READ or WRITE I/O
d) Acknowledge an interruption

The basic clock period is referred to as a T time or state and three or more T states make up a machine cycle. In the TS2068, each T-time is approximately 283 nanoseconds (2.83×10^{-7} seconds). Figure 2.1.3-1 illustrates the basic timing.

FIGURE 2.1.3-1

BASIC CPU TIMING EXAMPLE

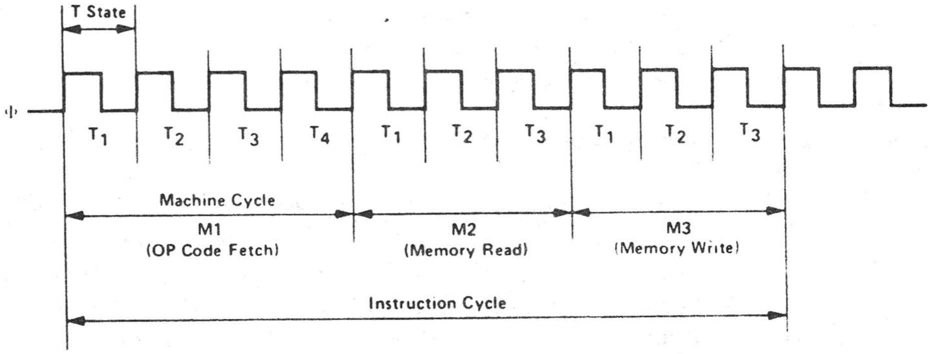
T State
Φ
T_1
T_2
T_3
T_4
T_1
T_2
T_3
T_1
T_2
T_3
Machine Cycle
M1
(OP Code Fetch)
M2
(Memory Read)
M3
(Memory Write)
Instruction Cycle

2.1.3.1 Address Bus

Output from the Z-80 are 16-bits of address information, A0 - A15, which are high-active tri-state signals and address for memory data and I/O device exchanges.

2.1.3.2 Data Bus

These input/output signals from the Z-80, D0 - D7, constitute an 8-bit bi-directional, high-active, tri-state data bus used for data exchanges with memory and I/O devices.

2.1.3.3 Control Bus

Associated with the Z-80 are 13 control lines which are provided by or used by the Z-80 to control system operation. These signals are detailed in Table 2-1.

2.1.3.4 Op Code Fetch

The timing during an M1 cycle (OP Code Fetch) is shown in Figure 2.1.3-2. At the beginning of the M1 cycle the PC (Program Counter) is placed onto the address bus, then one-half clock time later the $\overline{\mathrm{MREQ}}$ signal goes active indicating that the memory address is stable. The $\overline{\mathrm{RD}}$ signal is activated to indicate that memory read data should be gated onto the data bus. At the rising clock edge during the T3 state, the CPU samples the data on the data bus and deactivates the $\overline{\mathrm{RD}}$ and $\overline{\mathrm{MREQ}}$ signals. During the T3 and T4 states, the CPU decodes and executes the fetched instruction and the CPU places on the lower 7 bits of the address bus a memory refresh address and activates the $\overline{\mathrm{RFSH}}$ signal indicating a refresh read is to begin when $\overline{\mathrm{MREQ}}$ is activated.

2.1.3.5 Memory READ/WRITE

Memory read or write cycles other than Op Code Fetches are 3 clock periods long with the $\overline{\mathrm{MREQ}}$ and $\overline{\mathrm{RD}}$ signals used as in the fetch cycle. During a write cycle the $\overline{\mathrm{WR}}$ signal is activated when the write data is stable on the data bus. The address and data bus contents remain stable for one-half T state after the $\overline{\mathrm{WR}}$ signal goes active. Figure 2.1.3-3 illustrates.

FIGURE 2.1.3-2

INSTRUCTION OP CODE FETCH

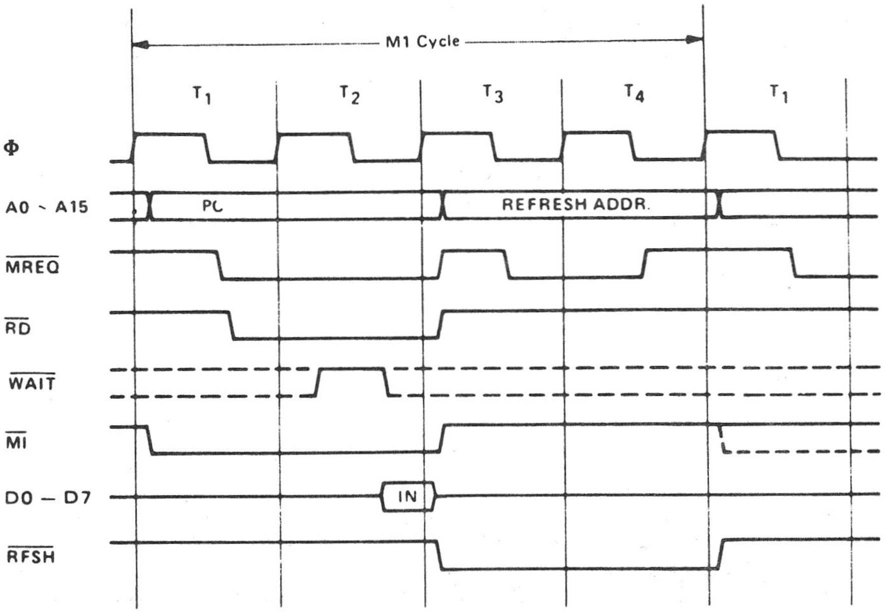
M1 Cycle
T_1
T_2
T_3
T_4
T_1
Φ
A0 ~ A15
PC
REFRESH ADDR.
$\overline{MREQ}$
$\overline{RD}$
$\overline{WAIT}$
$\overline{MI}$
D0 — D7
IN
$\overline{RFSH}$

FIGURE 2.1.3-3

MEMORY READ OR WRITE CYCLES

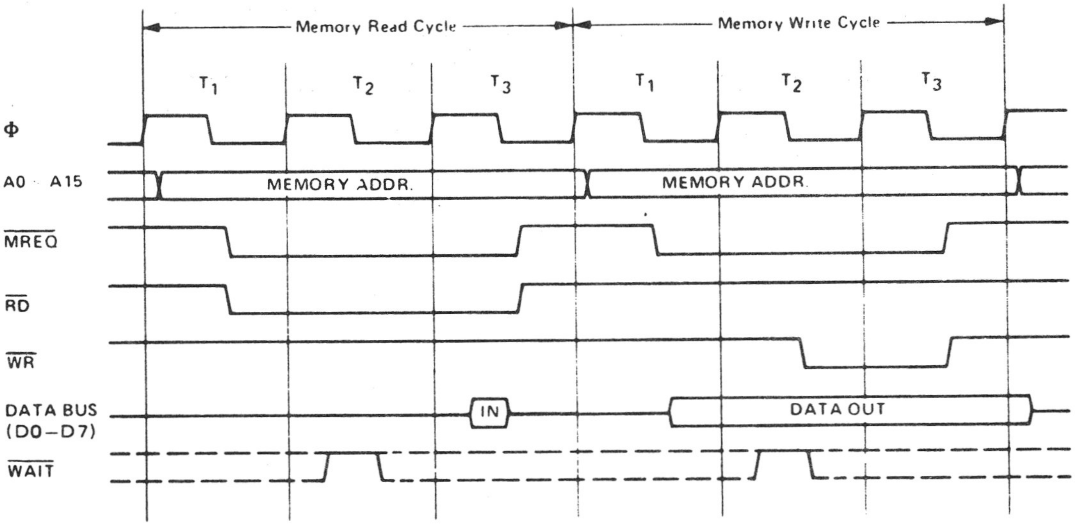
Memory Read Cycle
Memory Write Cycle
T_1
T_2
T_3
T_1
T_2
T_3
Φ
A0 A15
MEMORY ADDR.
MEMORY ADDR.
$\overline{MREQ}$
$\overline{RD}$
$\overline{WR}$
DATA BUS
(D0–D7)
IN
DATA OUT
$\overline{WAIT}$

2.1.3.6 I/O READ/WRITE

During I/O operations $\overline{\text{IORQ}}$ and $\overline{\text{RD}}$ or $\overline{\text{WR}}$ are activated on the leading edge of the T2 clock and a single Wait state is automatically inserted as illustrated in Figure 2.1.3-4. The $\overline{\text{RD}}$ and $\overline{\text{WR}}$ signals are used to enable data from the addressed port onto the data bus and to, on the rising edge of $\overline{\text{WR}}$, clock data to the I/O port, respectively. Note that external I/O may stretch the activation period of the $\overline{\text{WAIT}}$ line to extend the I/O cycles.

FIGURE 2.1.3-4

INPUT OR OUTPUT CYCLES

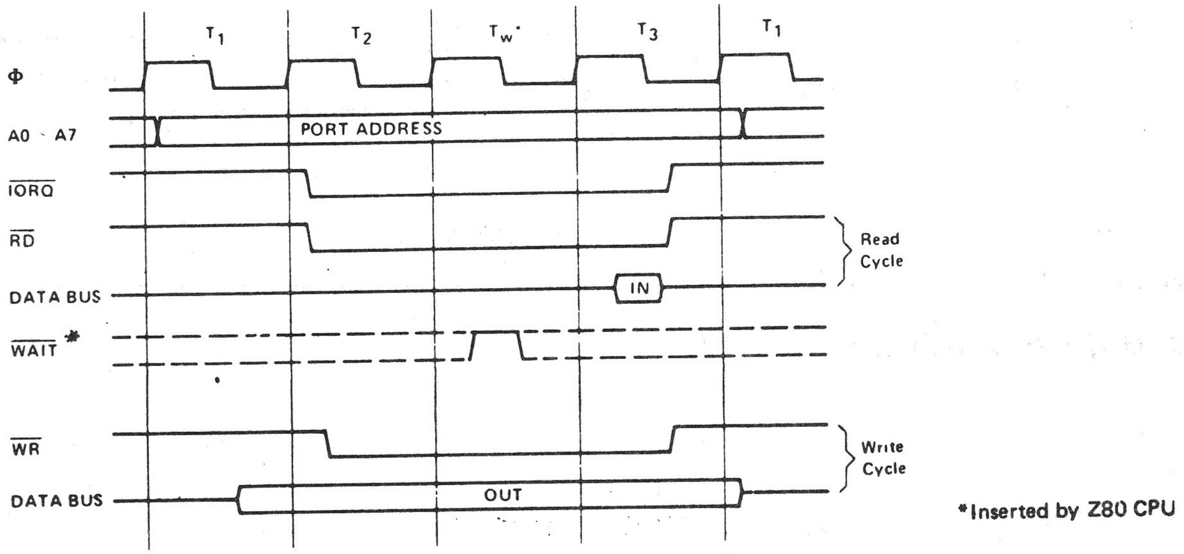
T1
T2
Tw*
T3
T1
Φ
A0 - A7
PORT ADDRESS
$\overline{\text{IORQ}}$
$\overline{\text{RD}}$
DATA BUS
IN
Read Cycle
$\overline{\text{WAIT}}$ *
$\overline{\text{WR}}$
DATA BUS
OUT
Write Cycle
*Inserted by Z80 CPU

2.1.3.7 Maskable Interruption

When enabled by software, when BUSRQ is not active and when INT is active at the rising edge of the last clock of any instruction, a maskable interruption occurs during the subsequent M1 cycle, as illustrated in Figure 2.1.3-5.

FIGURE 2.1.3-5

INTERRUPT REQUEST/ACKNOWLEDGE CYCLE

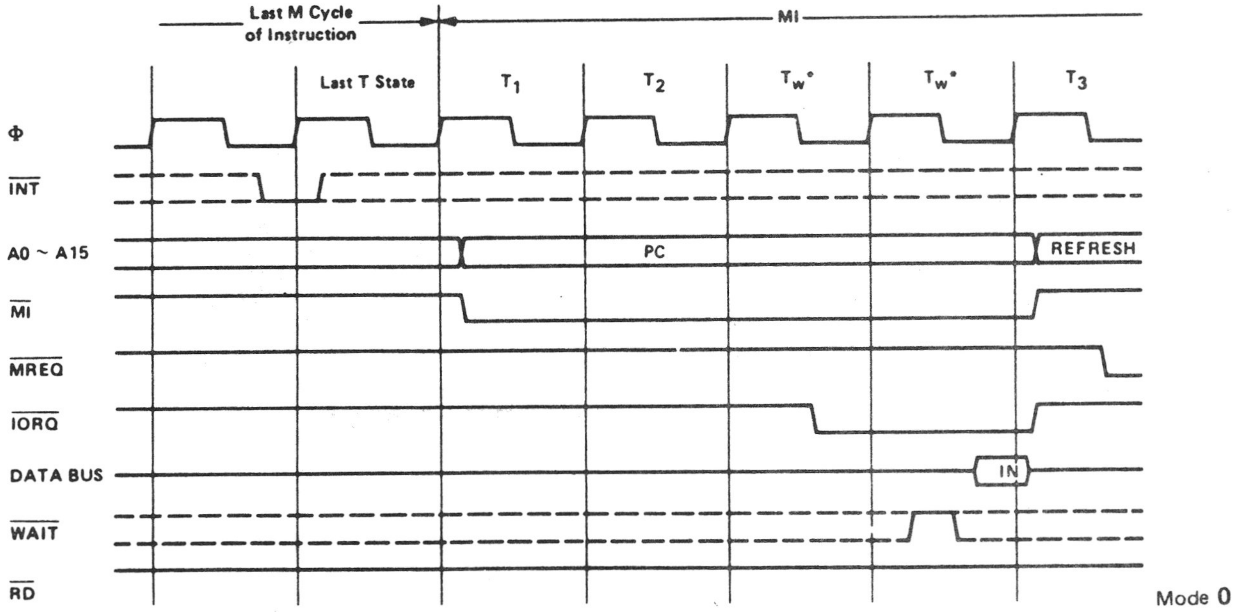
Last M Cycle of Instruction
MI
Last T State
T_1
T_2
T_w*
T_w*
T_3
Φ
INT
A0 ~ A15
PC
REFRESH
MI
MREQ
IORQ
DATA BUS
IN
WAIT
RD
Mode 0

In Interruption Mode 0, the interrupting I/O device places any instruction on the data bus during the IORQ activation and the CPU executes that instruction. The RESTART instruction is commonly used for this purpose. RESET will automatically set Interruption Mode 0.

In Interruption Mode 1, the CPU executes a RESTART to Location 0038H. This is the mode normally used by the TS 2068 software.

In Interruption Mode 2, the CPU concatenates the 8-bit argument, which must be a 2-byte boundary address, with the 8-bit I Register contents to form a 16-bit pointer to a memory table entry containing the 16-bit service routine address - the first byte in the table being the low order portion of the address. Once the interrupting device supplies the lower portion of the pointer (for concatenation), the CPU automatically pushes the PC onto the stack, obtains the starting address from the table, and does a jump to that address. 19 clock periods are required to complete this sequence.

2.1.3.8 Non-Maskable Interruption (NMI)

A pulse on the $\overline{\text{NMI}}$ input to the Z80 sets the internal latch which is tested by the CPU at the end of each instruction. The NMI has priority over the maskable interruption and its reponse is identical to the maskable interruption (Mode 1) except that the call location is 0066H instead of 0038H.

NOTES:

1. The NMI is not used by the TS 2068.

2. Comments in the ROM listing claiming to "mask the NMI" via the DI instruction are incorrect. The DI instruction masks only the maskable interruption.

TABLE 2-1

Z-80 CONTROL SIGNALS

	ACRONYM	DEFINITION
SYSTEM CONTROL	$\overline{\text{M1}}$	Machine Cycle 1 - Output, active low. This signal indicates that the current machine cycle is the OP code fetch cycle. During execution of instructions having a 2-byte OP code, this signal is generated as each OP code byte is fetched. $\overline{\text{M1}}$ is also used with $\overline{\text{IORQ}}$ to indicate an interrupt acknowledge cycle.
	$\overline{\text{MREQ}}$	Memory Request - Tri-state output, active low. This signal indicates that the Address Bus holds a valid address for a memory read or write operation.
	$\overline{\text{IORQ}}$	I/O Request - Tri-state output, active low. This signal indicates that the lower half of the Address Bus holds a valid I/O address for an I/O read or write operation. This signal is also used with $\overline{\text{M1}}$ in connection with acknowledging an interruption, indicating that an interrupt response vector can be placed on the data bus. I/O operations never occur during $\overline{\text{M1}}$ time.
	$\overline{\text{RD}}$	Memory Read - Tri-state output, active low. This signal indicates that the CPU wants to read data from memory or an I/O device. The addressed memory or device should use this signal to gate the requested data onto the CPU data bus.
	$\overline{\text{WR}}$	Memory Write - Tri-state output, active low. This signal indicates that the CPU data bus holds valid data to be stored in the addressed memory or I/O device.
	$\overline{\text{RFSH}}$	Refresh - Output, active low. This signal indicates that the lower 7 bits of the Address Bus contain a refresh address for dynamic memories and the current $\overline{\text{MREQ}}$ signal should be used to do a refresh read to all dynamic memories. A7 is a logic zero and the upper 8 bits of the Address Bus contain the contents of the I Register.

TABLE 2-1

Z80 CONTROL SIGNALS
(continued)

	ACRONYM	DEFINITION
CPU CONTROL	$\overline{\text{HALT}}$	Halt State - Output, active low. This signal indicates that the CPU has executed a HALT instruction. CPU operations are suspended until a Non-Maskable or a Maskable Interruption (with the mask enabled) occurs. While halted, the CPU executes NOP's to maintain memory refresh.
	$\overline{\text{WAIT}}$	Wait - Input, active low. This signal indicates to the CPU that the addressed memory or I/O device is not ready for a data transfer. The CPU will continue to enter wait states as long as this signal is active. This allows for synchronization of the CPU to external devices of varying speeds.
	$\overline{\text{INT}}$	Interrupt Request - Input, active low. This signal is generated by external devices and is honored at the end of the current instruction if the interrupt is not masked by the software and if the $\overline{\text{BUSRQ}}$ signal is not active. When the CPU accepts the interruption, an acknowledge signal is sent out at the beginning of the next instruction cycle ($\overline{\text{IORQ}}$ at M1 time). There are three interruption modes selectable by the software.
	$\overline{\text{NMI}}$	Non-Maskable Interruption - Input, negative edge triggered. This signal has a higher priority than $\overline{\text{INT}}$ and is always recognized at the end of the current instruction (cannot be masked). The CPU is forced to restart to location 0066H with the program counter saved in the external stack. NOTE: The NMI is not used in the TS2068 ROM software design.

TABLE 2-1

Z80 CONTROL SIGNALS
(continued)

	ACRONYM	DEFINITION
	$\overline{\text{RESET}}$	Reset - Input, active low. This signal forces the program counter to zero and initializes the CPU. Address and data buses go to their high impedance state and control output signals to their inactive state. No refresh occurs. Initialization includes: Disable the interrupt enable flip-flop and set Register I, Register R and the Interrupt Mode all to Zero.
CPU BUS CONTROL	$\overline{\text{BUSRQ}}$	Bus Request - Input, active low. This signal is used to request the CPU address bus, data bus and tri-state output control signals to go to a high impedance state permitting other devices to control these buses. The CPU sets these buses to a high impedance state at the termination of the current Machine cycle.
	$\overline{\text{BUSAK}}$	Bus Acknowledge - Output, active low. This signal is used to indicate to the requesting device that the CPU has set its address, data and control bus signals to a high impedance state in response to $\overline{\text{BUSRQ}}$.

2.1.4 ROM

The system includes both a 16K byte ROM and an 8K byte ROM mapped into the address space as shown below.

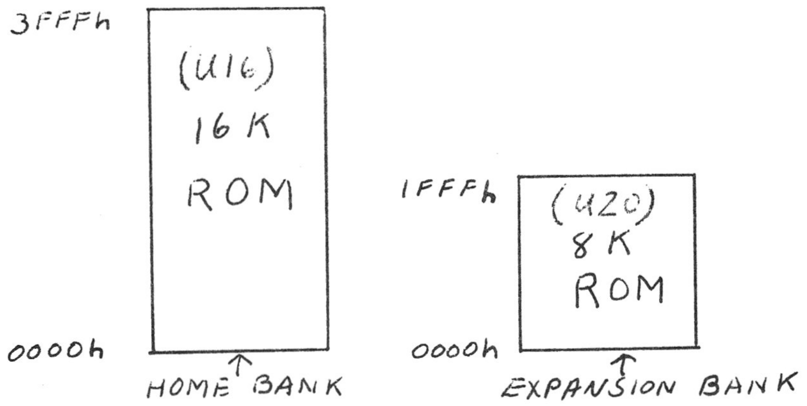

Section 2.1.8.1 describes the selection of the Home Bank and Expansion Bank via the control logic.

The devices involved are a 23128 and a 2364 for the 16K byte (128K-bit) and the 8K byte (64K-bit) ROM's respectively. Direct replacement of these devices with 27128 and 2764 EPROM's is not possible since pins 1 and 27 must be maintained in the high state for those devices (see schematic in Section 2.2). To replace U16 and U20 with 27128 and 2764 EPROM's requires the rework shown in Figure 2.1.4-1.

(1) Cut input to pin 27 on each chip.

(2) Wire +5V to pins 1 and 27 on each chip to pull high.

If U20 is to be a 27128, then replace the RD input to pin 26 with address A13 from pin 26 on U16.

2.1.5 32K RAM (Address 8000-FFFFH)

The upper 32K of RAM is composed of four 200ns 4416's (16K x 4 dynamic RAMs).

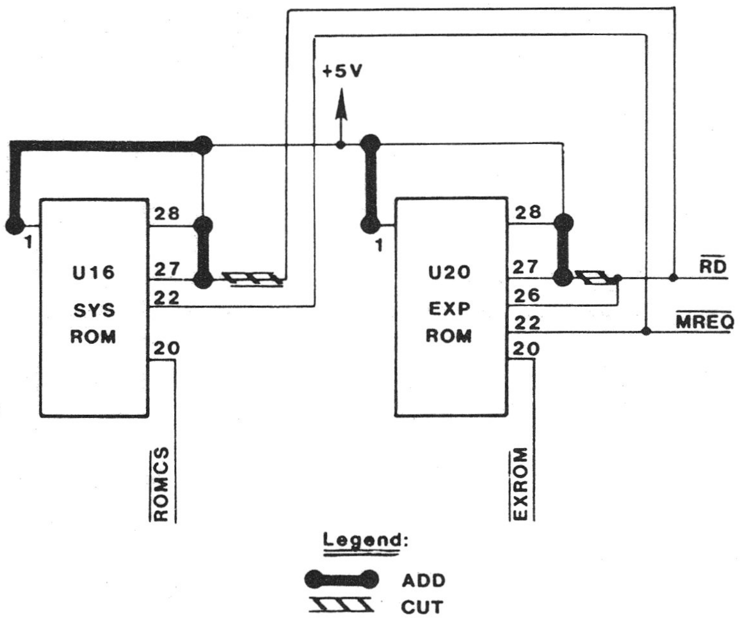
+5V
U16
SYS
ROM
1
28
27
22
20
ROMCS
U20
EXP
ROM
1
28
27
26
22
20
EXROM
RD
MREQ
Legend:
ADD
CUT

Figure 2.1.4-1. REWORK TO REPLACE ROM'S WITH EPROMS

2.1.6 Sound Generator

The Programmable Sound Generator (GI 8912) is accessed via Ports 0F5H (Address) and 0F6H (Data). The basic registers in the PSG which produce the programmed sounds include:

Tone Generators: Produce the basic square wave tone frequencies for each channel (A, B, C).

Noise Generator: Produces a frequency modulated pseudo-random pulse width square wave output.

Mixers: Combine the outputs of the Tone Generators and the Noise Generator. One for each channel (A, B, C).

Amplitude Control: Provides the D/A Converters with either a fixed or variable amplitude pattern. The fixed amplitude is under direct CPU control; the variable amplitude is accomplished by using the output of the Envelope Generator.

Envelope Generator: Produces an envelope pattern which can be used to amplitude modulate the output of each Mixer.

D/A Converters: The three D/A Converters each produce up to a 16-level output signal as determined by the Amplitude Control.

An additional register is shown in the PSG Block Diagram (Figure 2.1.6-1) which has nothing directly to do with the production of sound -- this is the I/O Port (A). Data to/from the CPU may be read/written to/from the 8-bit I/O Port without affecting any other function of the PSG. The TS 2068 uses the I/O Port to access the joysticks.

2.1.6.1 Tone Generator Control (Registers R0-R5)

The frequency of each square wave generated by the three Tone Generators (one each for Channels A, B, and C) is obtained in the PSG by first counting down the input clock by 16, then by further counting down the result by the programmed 12-bit Tone Period value. Each 12-bit value is obtained in the PSG by combining the contents of the relative Coarse and Fine Tune registers, as illustrated by Figure 2.1.6-2.

Note that the 12-bit value programmed in the combined Coarse and Fine Tune registers is a period value -- the higher the value in the registers, the lower the resultant tone frequency.

Note also that due to the design technique used in the Tone Period countdown, the lowest period value is 000000000001 (divide by 1) and the highest period value is 111111111111 (divide by 4095).

FIGURE 2.1.6-1

PSG REGISTER BLOCK DIAGRAM

REGISTER				BIT							
DEC	HEX	OCT		B7	B6	B5	B4	B3	B2	B1	B0
R0	R0	R0	Channel A	8 Bit Fine Tune							
R1	R1	R1	Tone Period	////////////////////////				4 Bit Coarse Tune			
R2	R2	R2	Channel B	8 Bit Fine Tune							
R3	R3	R3	Tone Period	////////////////////////				4 Bit Coarse Tune			
R4	R4	R4	Channel C	8 Bit Fine Tune							
R5	R5	R5	Tone Period	////////////////////////				4 Bit Coarse Tune			
R6	R6	R6	Noise Period	/////////////////			5 Bit Period Control				
				IN/OUT		NOISE			TONE		
R7	R7	R7	Enable	IOB	IOA	C	B	A	C	B	A
R8	R8	R10	Ch.A Amplitude	/////////////////			M	L3	L2	L1	L0
R9	R9	R11	Ch.B Amplitude	/////////////////			M	L3	L2	L1	L0
R10	RA	R12	Ch.C Amplitude	/////////////////			M	L3	L2	L1	L0
R11	RB	R13	Envelope	8 Bit Fine Tune E							
R12	RC	R14	Period	8 Bit Coarse Tune E							
R13	RD	R15	Envelope Shape/Cycle	//////////////////////// ////////////////////////				CONT.	ATT.	ALT.	HOLD
R14	RE	R16	I/O Port A Data Store	8 Bit Parallel I/O on Port A							

FIGURE 2.1.6-2

12-BIT TONE PERIOD (TP) TO TONE GENERATOR

COARSE TUNE REGISTER	CHANNEL	FINE TUNE REGISTER
R1	A	R0
R3	B	R2
R5	C	R4

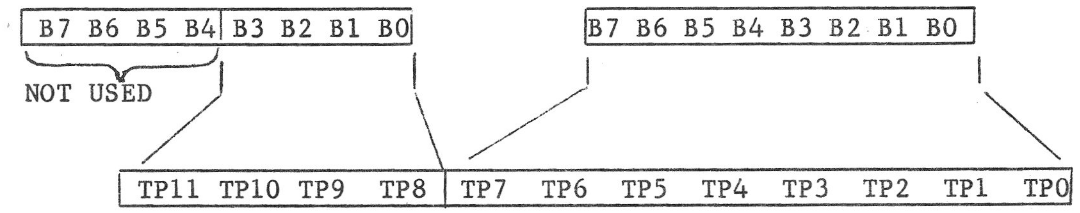
B7 B6 B5 B4 B3 B2 B1 B0
NOT USED
B7 B6 B5 B4 B3 B2 B1 B0
TP11 TP10 TP9 TP8 TP7 TP6 TP5 TP4 TP3 TP2 TP1 TP0

2.1.6.1 (continued)

The equations describing the relationship between the desired output tone frequency and the input clock frequency and Tone Period value are:

(a) $fT = \frac{fCLOCK}{16TP_{10}}$ (b) $TP_{10} = 256CT_{10} + FT_{10}$

Where:

fT = Desired tone frequency

$fCLOCK$ = Input clock frequency

TP_{10} = Decimal equivalent of the Tone Period bits TP11 to TP0

CT_{10} = Decimal equivalent of the Coarse Tune register bits B3 to B0 (TP11 to TP8)

FT_{10} = Decimal equivalent of the Fine Tune register bits B7 to B0 (TP7 to TP0)

From the above equations, it can be seen that the tone frequency can range from a low of:

fCLOCK/65520 (wherein $TP_{10} = 4095_{10}$)

to a high of:

fCLOCK/16 (wherein $TP_{10} = 1$).

The TS 2068 uses a 1.76475 MHZ input clock, so it can produce a range of 26.9 Hz to 110 kHz.

2.1.6.1 (continued)

To calculate the values for the contents of the Tone Period Coarse and Fine Tune registers, given the input clock and the desired output tone frequencies, we simply rearrange the above equations, yielding:

(a) $TP_{10} = \frac{fCLOCK}{16\ fT}$ (b) $CT_{10} + \frac{FT_{10}}{256} = \frac{TP_{10}}{256}$

Example 1: fT = 1 kHZ fCLOCK = 1.76475 MHz

$$TP_{10} = \frac{1.76475\text{x}\ 10^{6}}{16(1\text{x}10^{3})} = 110.3$$

Substituting this result into equation (b):

$$CT_{10} + \frac{FT_{10}}{256} = \frac{110.3_{10}}{256}$$

resulting in:

$$CT_{10} = 0 = 0000_2\ (B3\text{-}B0)$$

$$FT_{10} = 110_{10} = 01101110_2\ (B7\text{-}B0)$$

Example 2: fT = 100 Hz fCLOCK = 1.76475 MHz

$$TP_{10} = \frac{1.76475\text{x}10^{6}}{16(1\text{x}10^{2})} = 1103$$

Substituting this result into equation (b):

$$CT_{10} + \frac{FT_{10}}{256} = \frac{1103}{256} = 4 + 79/256$$

resulting in:

$$CT_{10} = 4_{10} = 0100_2\ (B3\text{-}B0)$$

$$FT_{10} = 79_{10} = 01001111_2\ (B7\text{-}B0)$$

2.1.6.2 Noise Generator Control (Register R6)

The frequency of the noise source is obtained in the PSG by first counting down the input clock by 16, then by further counting down the result by the programmed 5-bit Noise Period value. This 5-bit value consists of the lower 5 bits (B4-B0) of Register R6 as illustrated by Figure 2.1.6-3.

FIGURE 2.1.6-3

NOISE PERIOD REGISTER R6

B7	B6	B5	B4	B3	B2	B1	B0
NOT USED			5-BIT NOISE PERIOD (NP) TO NOISE GENERATOR				

Note that the 5-bit value in R6 is a period value -- the higher the value in the register, the lower the resultant noise frequency. Note also that, as with the Tone Period, the lowest period value is 00001 (divide by 1); the highest period value is 11111 (divide by 31_{10}).

The noise frequency equation is: $$fN = \frac{fCLOCK}{16\,NP_{10}}$$

Where:

fN = Desired noise frequency
$fCLOCK$ = Input clock frequency
NP_{10} = Decimal equivalent of the Noise Period register bits B4-B0.

From the above equation it can be seen that the noise frequency can range from a low of fCLOCK/496 (wherein $NP_{10}=31_{10}$) to a high of fCLOCK/16 (wherein $NP_{10} = 1$). Using a 1.76475 MHz clock, for example, would produce a range of noise frequencies from 3.6 kHz to 110.3 kHz.

To calculate the value for the contents of the Noise Period register, given the input clock and the desired output noise frequencies, we simply rearrange the above equation, yielding:

$$NP_{10} = fCLOCK/16fN$$

2.1.6.3 Mixer Control I/O Enable (Register R7)

Register 7 is a multi-function Enable register which controls the three Noise/Tone Mixers and the two general purpose I/O ports.

The Mixers, as previously described, combine the noise and tone frequencies for each of the three channels. The determination of combining neither/either/both noise and tone frequencies on each channel is made by the state of bits B5 thru B0 of R7.

The direction (input or output) of the two general purpose I/O ports (IOA and IOB) is determined by the state of bits B7 and B6 of R7. Note that in the TS 2068 there is no second I/O Port B.

These functions are illustrated by Figure 2.1.6-4 and Tables 2.1.6-1 and 2.1.6-2 below.

FIGURE 2.1.6-4

MIXER CONTROL - I/O ENABLE REGISTER R7

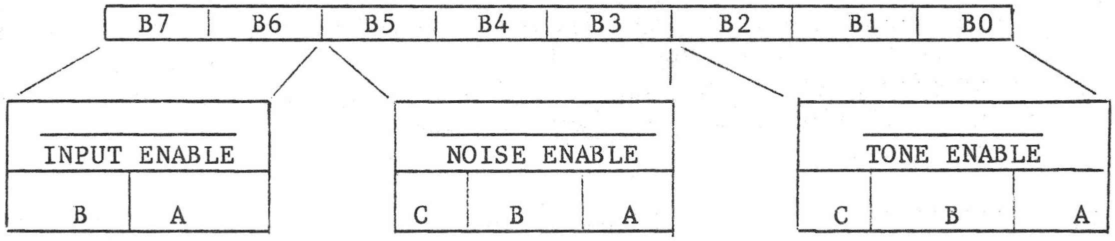

TABLE 2.1.6-1

I/O ENABLE TRUTH TABLE

NOISE ENABLE TRUTH TABLE		TONE ENABLE TRUTH TABLE	
R7 BITS B5 B4 B3	Noise Enabled on Channel	R7 BITS B2 B1 B0	Tone Enabled on Channel
0 0 0	C B A	0 0 0	C B A
0 0 1	C B -	0 0 1	C B -
0 1 0	C - A	0 1 0	C - A
0 1 1	C - -	0 1 1	C - -
1 0 0	- B A	1 0 0	- B A
1 0 1	- B -	1 0 1	- B -
1 1 0	- - A	1 1 0	- - A
1 1 1	- - -	1 1 1	- - -

TABLE 2.1.6-2

I/O PORT TRUTH TABLE

R7 BITS	I/O Port Status
B6	IOA
0	Input
1	Output

NOTE

Disabling noise and tone does not turn off a channel. Turning a channel off can only be accomplished by writing all zeroes into the corresponding Amplitude Control register, R8, R9 or R10 (refer to Paragraph 2.1.6.4).

2.1.6.4 Amplitude Control (Registers R8, R9, R10)

The amplitudes of the signals generated by each of the three D/A Converters (one each for Channels A, B, and C) is determined by the contents of the lower 5 bits (B4-B0) of Registers R8, R9 and R10 as illustrated by Figure 2.1.6-5.

FIGURE 2.1.6-5

D/A CONVERTER SIGNAL GENERATION

AMPLITUDE CONTROL REGISTER #	CHANNEL
R8	A
R9	B
R10	C

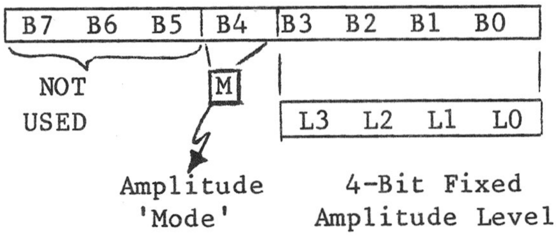
B7 B6 B5
B4
B3 B2 B1 B0
NOT USED
M
L3 L2 L1 L0
Amplitude 'Mode'
4-Bit Fixed Amplitude Level

2.1.6.4 (continued)

The amplitude 'mode' (Bit M) selects either fixed level amplitude (M=0) or variable level amplitude (M=1). It follows then that Bits L3-L0 defining the value of a 'fixed' level amplitude, are only active when M=0. When fixed level amplitude is selected, it is 'fixed' only in the sense that the amplitude level is under the direct control of the system processor (via bits L3-L0). Varying the amplitude when in this 'fixed' amplitude mode requires in each instance the direct intervention of the system processor via an address latch/write data sequence to modify the L3-L0 data.

When M=1 (select 'variable' level amplitudes), the amplitude of each channel is determined by the envelope pattern as defined by the Envelope Generator's 4-bit output E3-E0 (refer to Paragraph 2.1.6.5).

The amplitude 'mode' (Bit M) can be thought of as an 'envelope enable' bit, i.e. when M=0 the envelope is not used, and when M=1 the envelope is enabled.

Figure 2.1.6-6 illustrates all combinations of the 5-bit Amplitude Control.

FIGURE 2.1.6-6

AMPLITUDE CONTROL REGISTERS

AMPLITUDE CONTROL REGISTER #	CHANNEL
R8	A
R9	B
R10	C

B7 B6 B5	B4	B3	B2	B1	B0	Amplitude Control Output				
NOT USED	M	L3	L2	L1	L0					
	0	0	0	0	0	*0	0	0	0	The amplitude is fixed at 1 of 16 levels as determined by L3-L0.
	0	.	.	.	.	.	.	.	.	
	0	.	.	.	.	.	.	.	.	
	0	.	.	.	.	.	.	.	.	
	0	.	.	.	.	.	.	.	.	
	0	1	1	1	1	1	1	1	1	
	1	X	X	X	X	E3	E2	E1	E0	The amplitude is variable at 16 levels as determined by the output of the Envelope Gen.

(X=Don't Care)

*The all zeros code is used to turn a channel "off".

2.1.6.4 (continued)

Figure 2.1.6-7 graphically illustrates a selection of variable level (envelope-controlled) amplitude where the 16 levels directly reflect the output of the Envelope Generator. A fixed level amplitude would correspond to only one of the levels shown, with the level directly determined by the decimal equivalent of Bits L3-L0.

FIGURE 2.1.6-7

VARIABLE AMPLITUDE CONTROL (M=1)

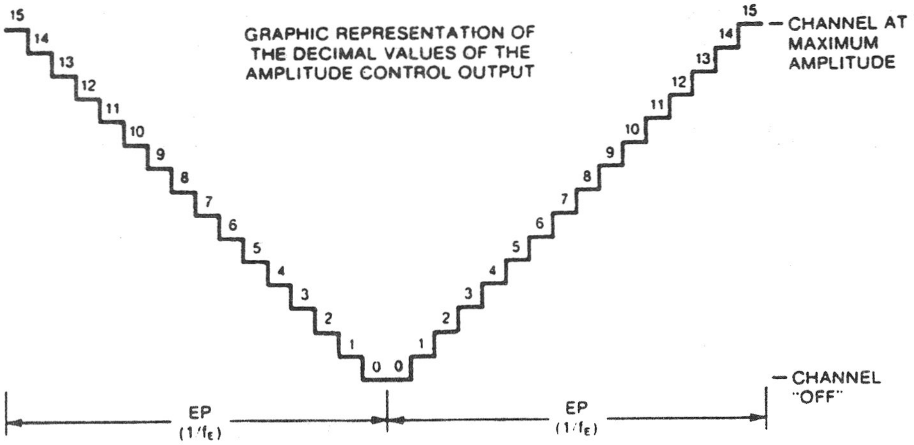
GRAPHIC REPRESENTATION OF THE DECIMAL VALUES OF THE AMPLITUDE CONTROL OUTPUT
15
14
13
12
11
10
9
8
7
6
5
4
3
2
1
0
0
1
2
3
4
5
6
7
8
9
10
11
12
13
14
15
— CHANNEL AT MAXIMUM AMPLITUDE
— CHANNEL "OFF"
EP (1/fE)
EP (1/fE)

2.1.6.5 Envelope Generator Control (Registers R11, R12, R13)

To accomplish the generation of fairly complex envelope patterns, two independent methods of control are provided in the PSG; first, it is possible to vary the frequency of the envelope using registers R11 and R12; and second, the relative shape and cycle pattern of the envelope can be varied using register R13. The following paragraphs explain the details of the envelope control functions, describing first the envelope period control and then the envelope shape/cycle control.

2.1.6.5.1 Envelope Period Control (Registers R11, R12)

The frequency of the envelope is obtained in the PSG by first counting down the input clock by 256, then by further counting down the result by the programmed 16-bit Envelope Period value. This 16-bit value is obtained in the PSG by combining the contents of the Envelope Coarse and Fine Tune registers, as illustrated by Figure 2.1.6-8.

FIGURE 2.1.6-8

16-BIT ENVELOPE PERIOD (EP) TO ENVELOPE GENERATOR

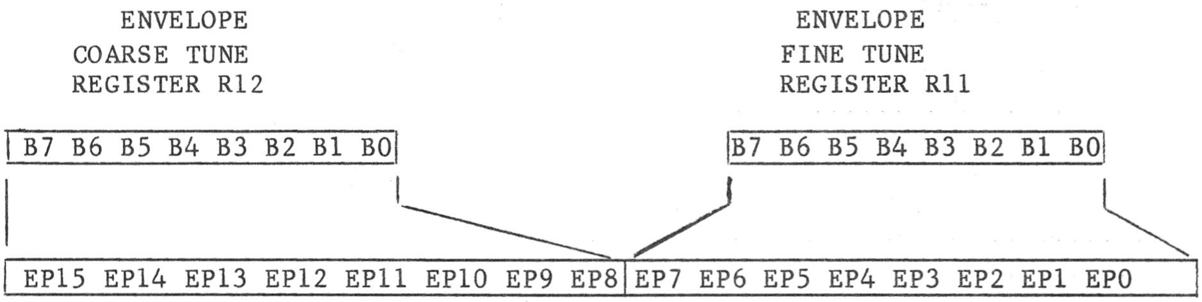
ENVELOPE
COARSE TUNE
REGISTER R12
ENVELOPE
FINE TUNE
REGISTER R11
B7 B6 B5 B4 B3 B2 B1 B0
B7 B6 B5 B4 B3 B2 B1 B0
EP15 EP14 EP13 EP12 EP11 EP10 EP9 EP8
EP7 EP6 EP5 EP4 EP3 EP2 EP1 EP0

Note that the 16-bit value programmed in the combined Coarse and Fine Tune registers is a period value - the higher the value in the registers, the lower the resultant envelope frequency.

Note also that, as with the Tone Period, the lowest period value is 000000000000001 (divide by 1); the highest period value is 1111111111111111_2 (divide by $65{,}535_{10}$).

The envelope frequency equations are:

(a) $$f_E = \frac{f_{CLOCK}}{256\ EP_{10}}$$ (b) $$EP_{10} = 256\ CT_{10} + FT_{10}$$

Where:

f_E = Desired envelope frequency
f_{CLOCK}= Input clock frequency
EP_{10} = Decimal equivalent of the Envelope Period bits EP15-EP0
CT_{10} = Decimal equivalent of the Coarse Tune register bits B7-B0 (EP15-EP8)
FT_{10} = Decimal equivalent of the Fine Tune register bits B7-B0 (EP7-EP0)

From the above equation it can be seen that the envelope frequency can range from a low of $f_{CLOCK}/16{,}766{,}960_{10}$ (wherein $EP_{10} = 65{,}535_{10}$) to a high of $f_{CLOCK}/256_{10}$ (wherein $EP_{10}=1$). Using a 1.76475 MHz clock, for example, would produce a range of envelope frequencies from 0.105 Hz to 6893.6 Hz.

To calculate the values for the contents of the Envelope Period Coarse and Fine Tune registers, given the input clock and the desired envelope frequencies, we rearrange the above equations, yielding:

(a) $EP_{10} = \frac{fCLOCK}{256fE}$ (b) $CT_{10} + \frac{FT_{10}}{256} = \frac{EP_{10}}{256}$

Example:

$fE = 0.5$ Hz
$fCLOCK = 1.76475$ MHz

$$EP_{10} = \frac{1.76475 \times 10^{6}}{256(0.5)} = 13787$$

Substituting this result into equation (b):

$$CT_{10} + \frac{FT_{10}}{256} = \frac{13787}{256} = 53 + \frac{219}{256}$$

$CT_{10} = 53 = 00110101_{2}$ (B7-B0)

$FT_{10} = 219 = 11011011_{2}$ (B7-B0)

2.1.6.5.2 Envelope Shape/Cycle Control (Register R13)

The Envelope Generator further counts down the envelope frequency by 16, producing a 16-state per cycle envelope pattern as defined by its 4-bit counter output, E3-E0. The particular shape and cycle pattern of any desired envelope is accomplished by controlling the count pattern (count up/count down) of the 4-bit counter and by defining a single-cycle or repeat-cycle pattern. This envelope shape/cycle control is contained in the lower 4 bits (B3-B0) of register R13. Each of these 4 bits controls a function in the envelope generator, as illustrated in Figure 2.1.6-9.

FIGURE 2.1.6-9

ENVELOPE SHAPE/CYCLE CONTROL REGISTER (R13)

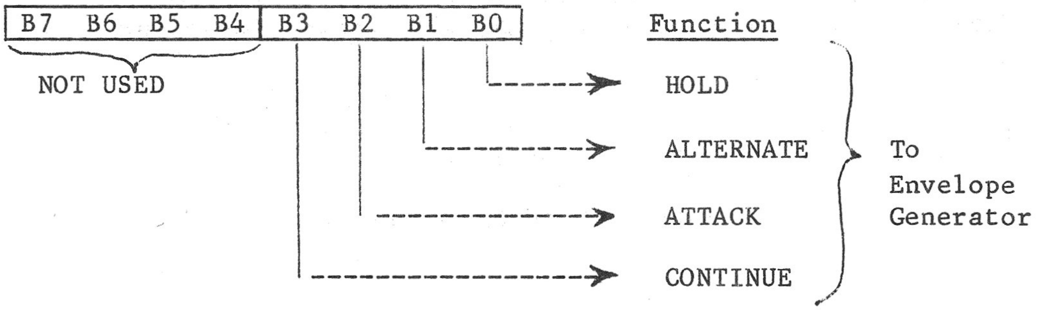

The definition of each function is as follows:

HOLD	When set to logic "1", limits the envelope to one cycle, holding the last count of the envelope counter (E3-E0 = either 0000 or 1111, depending on whether the envelope counter was in countdown or countup mode respectively.
ALTERNATE	When set to logic "1", the envelope counter reverses count direction (up-down) after each cycle.

NOTE

When both the Hold bit and the Alternate bit are ones, the envelope counter is reset to its initial count before holding.

ATTACK	When set to logic "1", the envelope counter will count up (attack) from E3-E0 = 0000 to E3-E0 = 1111; when set to logic "0", the envelope counter will count down (decay) from 1111 to 0000.
CONTINUE	When set to logic "1", the cycle pattern will be as defined by the Hold bit; when set to logic "0", the envelope generator will reset to 0000 after one cycle and hold at that count.

To further describe the above functions, numerous charts of the binary count sequence of E3-E0 could be used, showing each combination of Hold, Alternate, Attack and Continue. However, since these outputs are used (when selected by the Amplitude Control registers) to amplitude modulate the output of the Mixers, a better understanding of their effect can be accomplished via a graphic representation of their value for each condition selected, as illustrated in Figures 2.1.6-10 and 2.1.6-11.

FIGURE 2.1.6-10

ENVELOPE GENERATOR OUTPUT

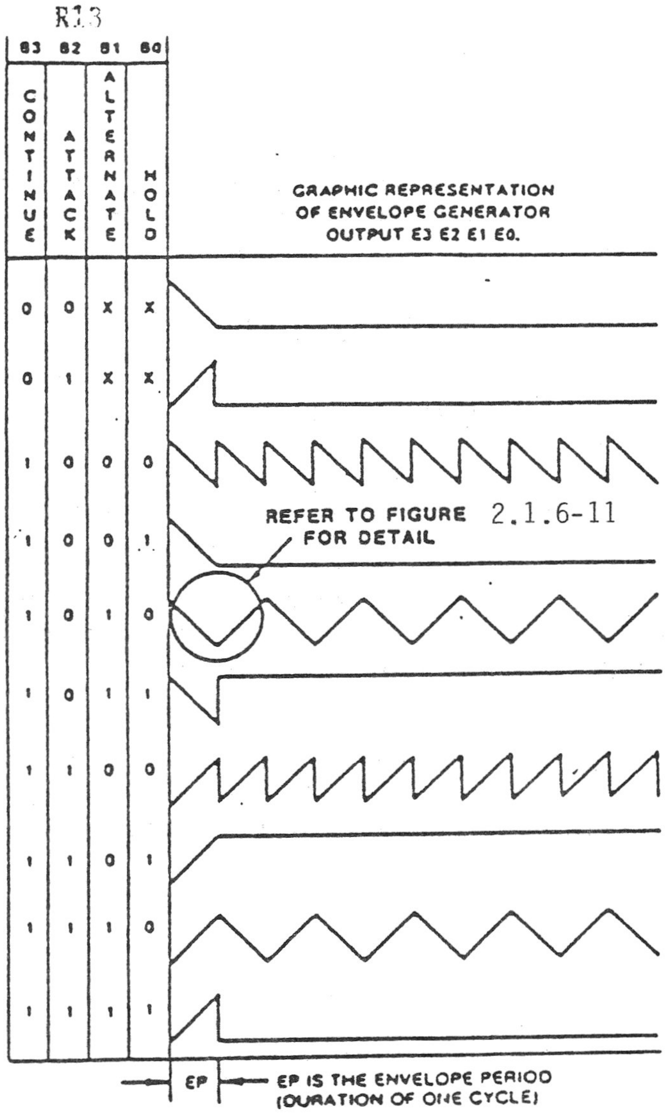
R13
B3 B2 B1 B0
CONTINUE
ATTACK
ALTERNATE
HOLD
GRAPHIC REPRESENTATION OF ENVELOPE GENERATOR OUTPUT E3 E2 E1 E0.
0 0 X X
0 1 X X
1 0 0 0
1 0 0 1
1 0 1 0
1 0 1 1
1 1 0 0
1 1 0 1
1 1 1 0
1 1 1 1
REFER TO FIGURE 2.1.6-11 FOR DETAIL
EP
EP IS THE ENVELOPE PERIOD (DURATION OF ONE CYCLE)

FIGURE 2.1.6-11

DETAIL OF TWO CYCLES OF FIGURE 2.1.6-10

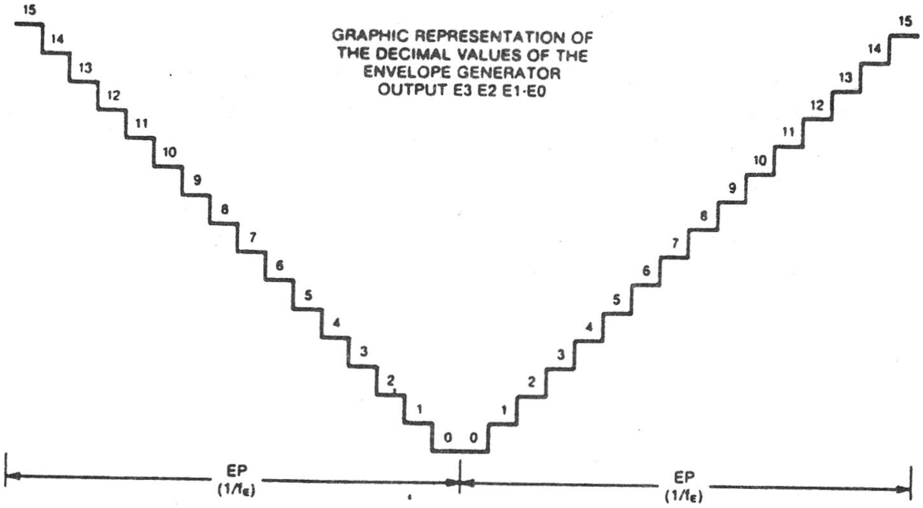
GRAPHIC REPRESENTATION OF THE DECIMAL VALUES OF THE ENVELOPE GENERATOR OUTPUT E3 E2 E1·E0
15
14
13
12
11
10
9
8
7
6
5
4
3
2
1
0
0
1
2
3
4
5
6
7
8
9
10
11
12
13
14
15
EP (1/fE)
EP (1/fE)

2.1.6.6 I/O Port Data Store (Register R14)

Register R14 functions as an intermediate data storage register between the PSG/CPU data bus (DA7-DA0) and the I/O Port (IOA7-IOA0). This port is available for reading the joysticks. Using register R14 for the transfer of I/O data has no effect at all on sound generation.

To output data from the CPU bus to a peripheral device connected to I/O Port A would require the following steps:

1. Latch address R7 (select Enable register)
2. Write data to PSG (setting R7, B6=1)
3. Latch address R14 (select IOA register)
4. Write data to PSG (data to be output on I/O Port A)

To input data from I/O Port A to the CPU bus would require the following:

1. Latch address R7 (select Enable register)
2. Write data to PSG (setting R7, B6=0)
3. Latch address R14 (select IOA register)
4. Read data from PSG (data from I/O Port A)

Note that once loaded with data in the output mode, the data will remain on the I/O port until changed either by loading different data, by applying a reset (grounding the Reset pin), or by switching to the input mode.

Note also that when in the input mode, the contents of register R14 will follow the signals applied to the I/O port. However, transfer of this data to the CPU bus requires a "read" operation as described above.

2.1.7 Joystick Port Operation

The joystick port (Register 14 of the Sound Chip - Section 2.1.6.6) is read via an IN-instruction directed at port F6H with selection of activating data from the left (player 1) or right (player 2) determined by Address bits 8 and 9 as shown in Figure 2.1.7-1. In order to address Register 14, a 0EH must be written to port F5H (Sound Generator Address) prior to reading joystick data. Section 4.4 describes the software sequence necessary to control this hardware.

In the example of Figure 2.1.7-1, the joystick, shown schematically in the lower left of the drawing, is composed of a movable center stick which is pushed up to touch the up-contact and, therefore, electronically connects pin-8 to pin-1. In this state, a read of port F6H with address bit A8 high, causes actions as follows:

(1) Address A8 high turns on transistor Q8
(2) Q8 drives cable pin-8 low
(3) The movable center stick of the joystick in contact with the up-contact results in a conductive path from cable pin-8 to cable pin-1.
(4) Pin-1 low results in a 0 in bit position 0 of the I/O register via the isolation diode.

The various positions of the stick similarly result in various bits being read from the I/O register.

Note that +5 volts and ground are available on the connector so +5V logic could be attached to the joystick port.

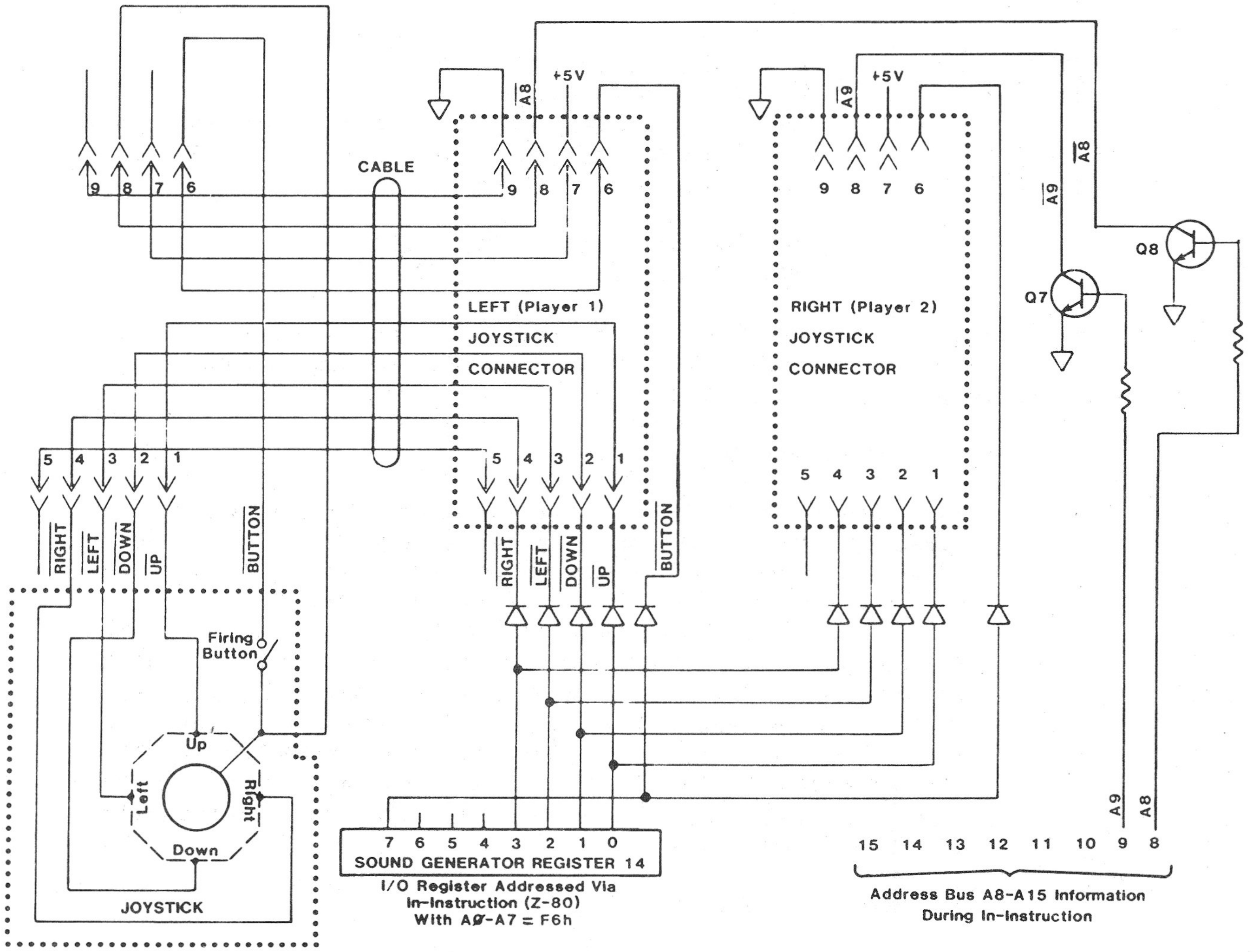
CABLE
9 8 7 6
5 4 3 2 1
+5V
$\overline{A8}$
$\overline{A9}$
LEFT (Player 1)
JOYSTICK
CONNECTOR
RIGHT (Player 2)
JOYSTICK
CONNECTOR
Q7
Q8
$\overline{RIGHT}$
$\overline{LEFT}$
$\overline{DOWN}$
$\overline{UP}$
$\overline{BUTTON}$
Firing Button
Up
Left
Right
Down
JOYSTICK
7 6 5 4 3 2 1 0
SOUND GENERATOR REGISTER 14
I/O Register Addressed Via
In-Instruction (Z-80)
With A0-A7 = F6h
A9
A8
15 14 13 12 11 10 9 8
Address Bus A8-A15 Information
During In-Instruction

Figure 2.1.7-1. JOYSTICK PORT OPERATION

2.1.8 Control Logic

The control logic of the TS2068 is primarily a Standard Cell Logic Device in a 68-pin JEDEC leaded carrier package and includes the following major functions:

SECTION	FUNCTION
2.1.8.1	Bank Selection Logic
2.1.8.2	Z-80 Clock Generation
2.1.8.3	Display Timing, DMA Display File Access, Attribute Control, and Pixel Data Serial Shift
2.1.8.4	Interruption Generation
	BEEP Output (See Section 2.1.13.2)
	CASSETTE I/O (See Section 2.1.12).

Additionally, Table 2.1.8-1 provides a description of the function of each SCLD I/O pin. See the System Schematic in Appendix D for pin numbering.

2.1.8.1 Bank Selection Logic

The TS2068 is a Z-80 based computer, therefore it can directly address only 64K bytes of memory via its 16-bit address. Additionally, since the Z-80 has no relocation or indirection capability, the conventional technique of extending the memory space available to the Z-80 is bank switching. The TS2068 provides extended bank switching by allowing selection of memory in 8K "chunks" which are identified by bank number and chunk number as illustrated in Figure 2.1.8-1 for the internal bank selection logic. The externally sourced $\overline{\text{BE}}$ (Bank Enable) signal can be used by external logic to disable the internally controlled memories.

As shown in Figure 2.1.8-1:

(1) The cartridge is selected on a memory access with:

- a. Port FF bit 7 = 0
- b. The HSR at port F4h has a "1" in the bit selected by a decode of Address bits A13-A15. and
- c. $\overline{\text{BE}}$ is high

causing activation of $\overline{\text{ROSCS}}$ (ROS Chip Select).

(2) The EXROM bank is selected on a memory access with:

- a. Port FF bit 7 = 1
- b. The HSR at port F4H has a "1" in the bit selected by a decode of Address bits A13 - A15.
- c. $\overline{\text{BE}}$ is high

causing the activation of $\overline{\text{EXROM}}$ (Ext. ROM Enable)

(3) The Home Bank is selected on a memory access with

- a. The HSR at Port F4H has a "0" in the bit selected by a decode of Address bits A13 - A15.
- b. $\overline{\text{BE}}$ is high.

causing the activation of the appropriate enable signal as detailed below.

To understand the details of the schematic of Section 2.2 (Appendix D):

(1) SELECT CARTRIDGE of Figure 2.1.8-1 involves activating $\overline{\text{ROSCS}}$ to its low active state

(2) SELECT EXROM of Figure 2.1.8-1 involves activating $\overline{\text{EXROM}}$ to its low active state

(3) SELECT HOME BANK of Figure 2.1.8-1 involves

- a. Activating $\overline{\text{ROMCS}}$ to its low active state when A15=0 and A14=0
- b. Activating $\overline{\text{CAS1}}$ to its low active state when A15=0 and A14-1
- c. Activating $\overline{\text{CAS2}}$ to its low active state when A15=1 and A14-0
- d. Activating $\overline{\text{CAS3}}$ to its low active state when A15=1 and A14=1.

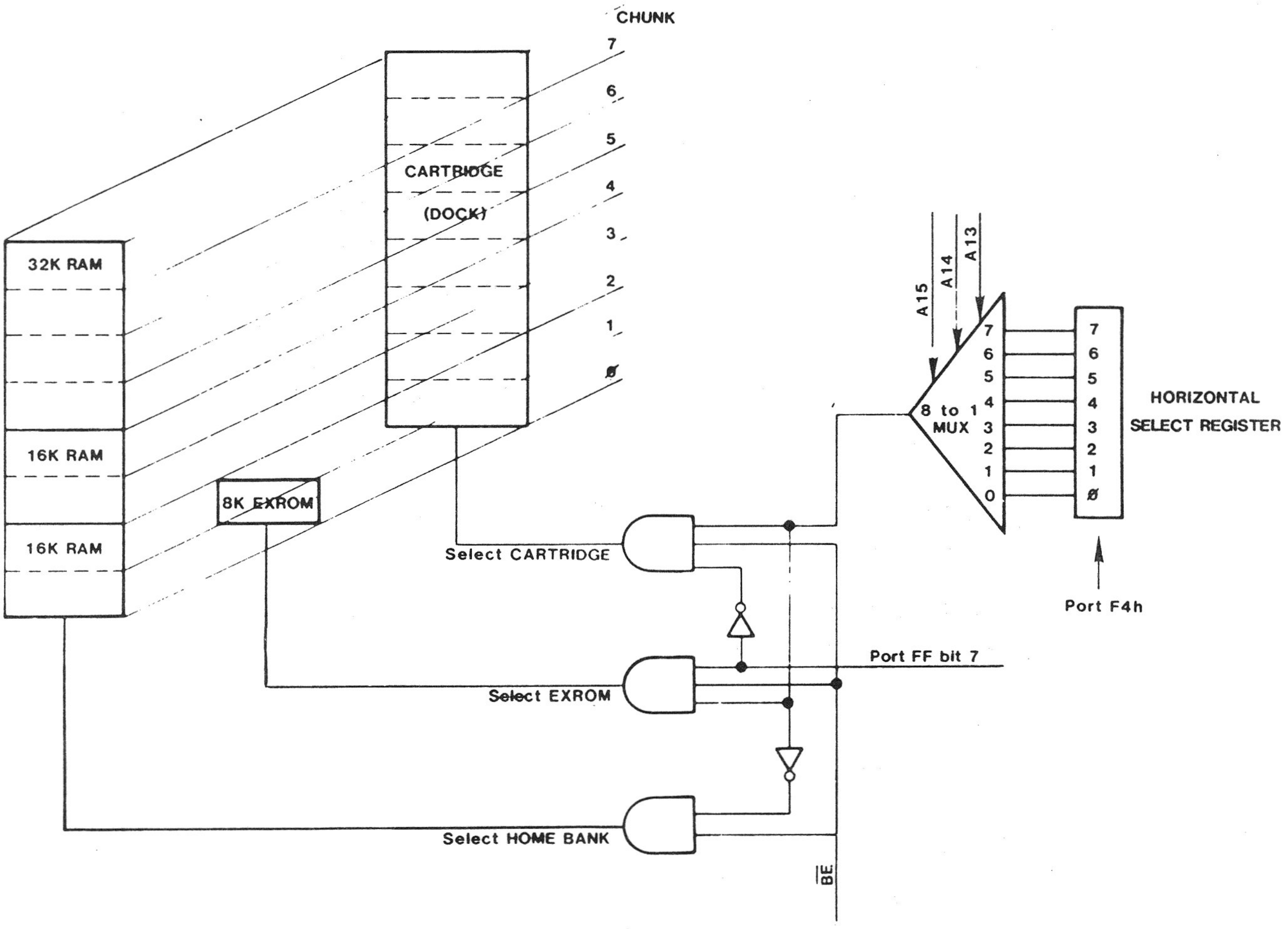
CHUNK
7
6
5
4
3
2
1
0
CARTRIDGE
(DOCK)
32K RAM
16K RAM
16K RAM
8K EXROM
A15
A14
A13
8 to 1
MUX
HORIZONTAL
SELECT REGISTER
Port F4h
Select CARTRIDGE
Select EXROM
Select HOME BANK
Port FF bit 7
BE

Figure 2.1.8-1. BANK SELECTION LOGIC

TABLE 2.1.8-1

SCLD I/O PIN FUNCTION DEFINITIONS

SYMBOL	NAME	DIRECTION OF SCLD IN/OUT	FUNCTION
A0-A7 A13-A15	Address Bus	In	Address Bus lines Input from Z80A
D0-D7	Data Bus	In/Out	Data Bus inputs/outputs from/to Z80A through U9-74LS245 or inputs from display RAM (16K) - U6 and U7
KB0-KB4	Keyboard Outputs	In	Inputs from 5 lines of keyboard matrix - goes low at one of 8 address line (active low) sequences on I/O Request
A7R	A7+Refresh	Out	To refresh and address 8th bit address line input of RAM memory (not display) of 32K of 4416 RAM's (Home Bank 8000H to FFFFH)
MA0-MA7	Muxed Adrs.Bus	Out	Display memory muxed address bus and refresh
$\overline{\text{TS}}$	Tri-State Display Memory Ctl.	Out	Tri-State control for address and data buffers when CPU is addressing display memory at same time display controller is addressing the display memory
ϕCPU	Clock to CPU	Out	CLK - Clock to Z80A CPU which is interrupted to stop CPU when CPU wants to address display RAM at same time as display controller
$\overline{\text{RD*}}$	Read Direction Control to SCLD	Out	To control read/write direction of 74LS245 Data Bus Buffer between CPU and SCLD
$\overline{\text{ROMCS}}$	Home ROM Chip Select	Out	To activate the 16K Home ROM (first 16K) when memory selection (MS) is set to Home Bank
$\overline{\text{RAS1}}$	Row Address Strobe #1	Out	To activate row address strobe for display memory only during memory read/write, refresh and display read

TABLE 2.1.8-1

SCLD I/O PIN FUNCTION DEFINITIONS
(continued)

SYMBOL	NAME	DIRECTION OF SCLD IN/OUT	FUNCTION
$\overline{\text{CAS1}}$	Column Address Strobe #1	Out	To activate column address strobe for display memory only (2nd 16K) during memory read/write and display read
$\overline{\text{CAS2}}$	Column Address Strobe #2	Out	To activate column address strobe for Home Bank RAM (3rd 16K)
$\overline{\text{CAS3}}$	Column Address Strobe #3	Out	To activate column address strobe for Home Bank RAM (4th 16K)
$\overline{\text{DRAMWE}}$	Dynamic RAM Write Enable	Out	When active low, enables a write into the display RAM only
MUX	Mux Control of RAM Address	Out	Mux control to 74LS157 (U10 & U11 to multiplex the row and column addresses to all dynamic RAM's
V	Chroma Vector V	Out	Color vector level for quadrature (R-Y) input to video modulator
$\overline{\text{Y}}$	Luminance $\overline{\text{Y}}$	Out	Luminance (brightness) control level
$\overline{\text{RD}}$	Read to CPU	In	CPU is reading from a memory or I/O location
$\overline{\text{WR}}$	Write from CPU	In	CPU is writing to a memory or I/O location
$\overline{\text{MREQ}}$	Memory Request	In	CPU is requesting access to a memory location to read or write
$\overline{\text{IORQ}}$	I/O Request	In	CPU is requesting access to an I/O location to read or write

TABLE 2.1.8-1

SCLD I/O PIN FUNCTION DEFINITIONS
(continued)

SYMBOL	NAME	DIRECTION OF SCLD IN/OUT	FUNCTION
$\overline{\text{RFSH}}$	Refresh	In	CPU is generating a refresh address to refresh dynamic RAM's
Tape In	Tape Input	In	Magnetic tape signal input
$\overline{\text{BE}}$	Bank Enable	In	When active low, indicates that internal memory is disabled (Home, Extension and Dock Banks) and an external memory is in use
$\overline{\text{EXROM}}$	Extension ROM Select	Out	Active low chip select signal for Extension ROM
VCC	+5 Volt Power	In	Power (+5V) input to SCLD
$\overline{\text{INT}}$	Interrupt to CPU	Out	Interrupts CPU to handle keyboard strobing and timer for PAUSE command. Open drain N channel with internal pull-up
$\overline{\text{ROSCS}}$	ROS Chip Select	Out	ROM-Oriented Software (Cartridge Bank) Chip Select
SPKR/TAPE OUT	Speaker and Tape Output	Out	Digital output to magnetic tape and to sound amplifier for speaker output
ϕC	Clock "C"	Out	Clock for sound chip @1.764 MHz.
BDIR	Bus Direction to Sound Chip	Out	A bus direction control signal to the PSG. When high the sound chip either receives a write to PSG or latches addresses from the data bus
BC1	Bus Control to Sound Chip	Out	A bus control signal to the PSG. When high the sound chip either is read to data bus or latches addresses from the data bus

TABLE 2.1.8-1

SCLD I/O PIN FUNCTION DEFINITIONS
(continued)

SYMBOL	NAME	DIRECTION OF SCLD IN/OUT	FUNCTION
OSC Out	Oscillator Out	Out	Xtal Oscillator amplifier output to drive crystal
OSC In	Oscillator In	In	Xtal Oscillator amplifier input to sense crystal signal
U	Chroma Vector U	Out	Color vector level for quadrature (B-Y) input to video modulator
GND	Ground	In	Ground return of SCLD
$\overline{\emptyset}$	Buffered Clock	Out	Buffered CPU clock to outside (J1 - connector)
R	Red Color Output	Out	Produce color signals to RGB monitor (TTL level)
G	Green Color Output	Out	Produce color signals to RGB monitor (TTL level)
B	Blue Color Output	Out	Produce color signals to RGB monitor (TTL level)

2.1.8.2 Z-80 Clock Generation

The oscillator circuit utilizes an AT-cut quartz crystal at 14.112 MHz. This oscillator feeds a divide by 4 chain to generate the 3.528 MHz clock for the CPU (Ø CPU). This clock runs continuously except when the CPU addresses the 16K bytes of RAM containing the video display file at the same time the video display processor logic requires access to that same RAM. For this contention case the CPU clock is stopped in the high state until the video display processor access has been completed, then the CPU clock continues in its normal manner.

2.1.8.3 Display File H/W Control and Timing

The 14.112 MHz oscillator is also used to drive the counter chain deriving video timing. By dividing the 14.112 MHz. signal by 896 a 15.75 KHz horizontal sweep frequency is generated. The 15.75 KHz signal feeds a 9-stage counter which counts from 0 to 106H (262 decimal) developing the 60.1145 Hz vertical sync. See Figure 2.1.8-2.

During each horizontal scan the video display processor accesses, in the standard video mode, 32 bytes of pixel data plus 32 bytes of attributes by 32 memory accesses reading 2 bytes per access in RAM page mode, i.e. the low order address bits are provided to the RAM once via RAS activation, then the data byte is read during the first activation of CAS and the attribute byte is read during the second activation of CAS. The page mode operation is completed by deactivating RAS. (See Fig. 2.1.8-2.)

The accessed pixel data is serially shifted out to the video generation circuitry at a rate of 1 bit each 142 nanoseconds (7.056 MHz) resulting in the need to fetch a new data/attribute pair each 1.134 microseconds during the horizontal scan time. The shifted out pixel information is used to control the selection of the 3 paper color (pixel=0) or 3 ink color (pixel=1) bits to be gated out as the R, G, and B signals. When FLASH is enabled by the attribute byte, the INK and PAPER field information is swapped at the 1.879 Hz. flash rate. The R, G, and B signals control the D-to-A converter which generates the proper U, V, and $\overline{\text{Y}}$ outputs for use by the 1889 to create composite video.

The address information provided to the RAM's during RAS and CAS times is as shown in Figure 2.1.8-2. This address generation logic explains the non-sequential nature of the video display as described in Section 2.1.10.

FIGURE 2.1.8-2

VIDEO DISPLAY PROCESSOR RAM ADDRESS GENERATION
(Normal Video Mode)

DISPLAY PIXEL DATA ADDRESS

Address Bit:	15	14	13	12	11	10	9	8	7	6	5	4	3	2	1	0
Range= 4000H- 57FFH	0	1	0	R	Q	M	L	K	P	O	N	I	H	G	F	D
	CAS 1A								RAS							

DISPLAY ATTRIBUTE ADDRESS

Address Bit:	15	14	13	12	11	10	9	8	7	6	5	4	3	2	1	0
Range= 5800H- 5AFFH	0	1	0	1	1	0	R	Q	P	O	N	I	H	G	F	D
	CAS 1B								RAS							

VIDEO TIMING COUNTER CHAIN

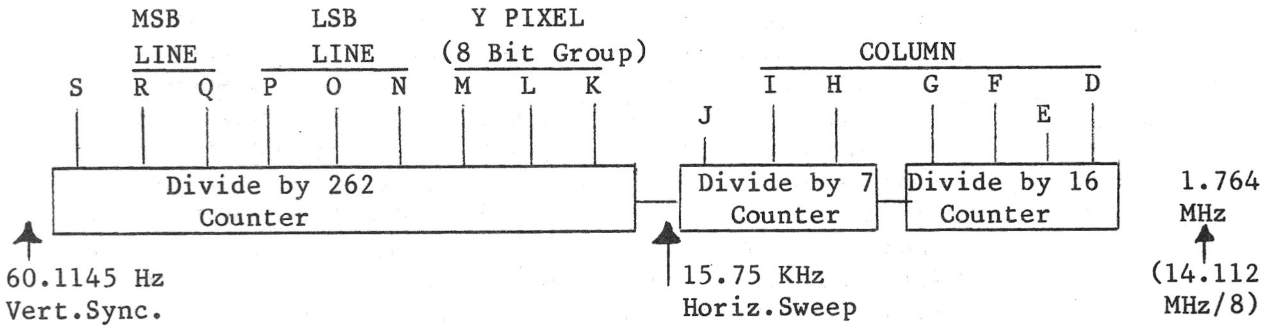
MSB LINE
LSB LINE
Y PIXEL (8 Bit Group)
COLUMN
S
R
Q
P
O
N
M
L
K
J
I
H
G
F
E
D
Divide by 262 Counter
Divide by 7 Counter
Divide by 16 Counter
1.764 MHz
(14.112 MHz/8)
60.1145 Hz Vert.Sync.
15.75 KHz Horiz.Sweep

2.1.8.4 Interruption Generation (17 ms)

During the vertical blanking interval (once each 16.635 ms) the SCLD, if enabled by the INTEN bit (Bit 6) of I/O Port FFH, activates the $\overline{\text{INT}}$ signal which directly connects to the $\overline{\text{INT}}$ input to the Z80. A CPU maskable interruption can then occur, as described in Section 2.1.3.7, if enabled.

2.1.9 Keyboard

The keyboard for the TS 2068 has forty-two (42) hard keys (typewriter style) with tactile feel utilizing an over-dead-center type of rubber spring pad and a carbon pill that hits the P.C. board, just under the keyboard, to short-out a pair of closely placed precious metal contacts. The read-out matrix is an eight by five cross point switching as shown in Figure 2.1.9-1.

Each switch closure connects one of the eight high order address lines (by going low through a diode) to one of the five input lines to the SCLD (KB0 through KB4).

Scanning is by software algorithm as described in Section 4.1.1. During the IN instruction, address bits A0-A7=FEH select the Keyboard I/O port while bits A8-A15 select the particular 5 keys to be sampled during the particular IN instruction execution. For example, an IN instruction directed at the keyboard I/O port with address bit A8 low and A9-A15 high will supply 0's on KB0, KB1, KB2, KB3, and/or KB4 if the CAP SHIFT, Z, X, C, and/or V keys are respectively depressed.

Note that when reading the I/O port FEH, data bits D5-D7 are not part of the keyboard information.

Section 2.4.7 details the connection of the keyboard to the main P.C. board.

2.1.10 16K Video Display RAM

The 16K-byte video display RAM, composed of two 4416's, is isolated from the Z80A CPU by the SCLD control logic and buffers to allow the video display processor to access pixel and attribute data from the display files independent of the CPU (see Section 2.1.8.3).

The Video Display RAM is located in Chunks 2 and 3 of the Home Bank, beginning at 4000H and 6000H respectively. Figure 2.1.10-1 illustrates the organization of the Primary Display File located at 4000H. The second display file utilizes the same organization. Based on the video mode set via Port FFH, the video hardware accesses the RAM for pixel data and attribute control information.

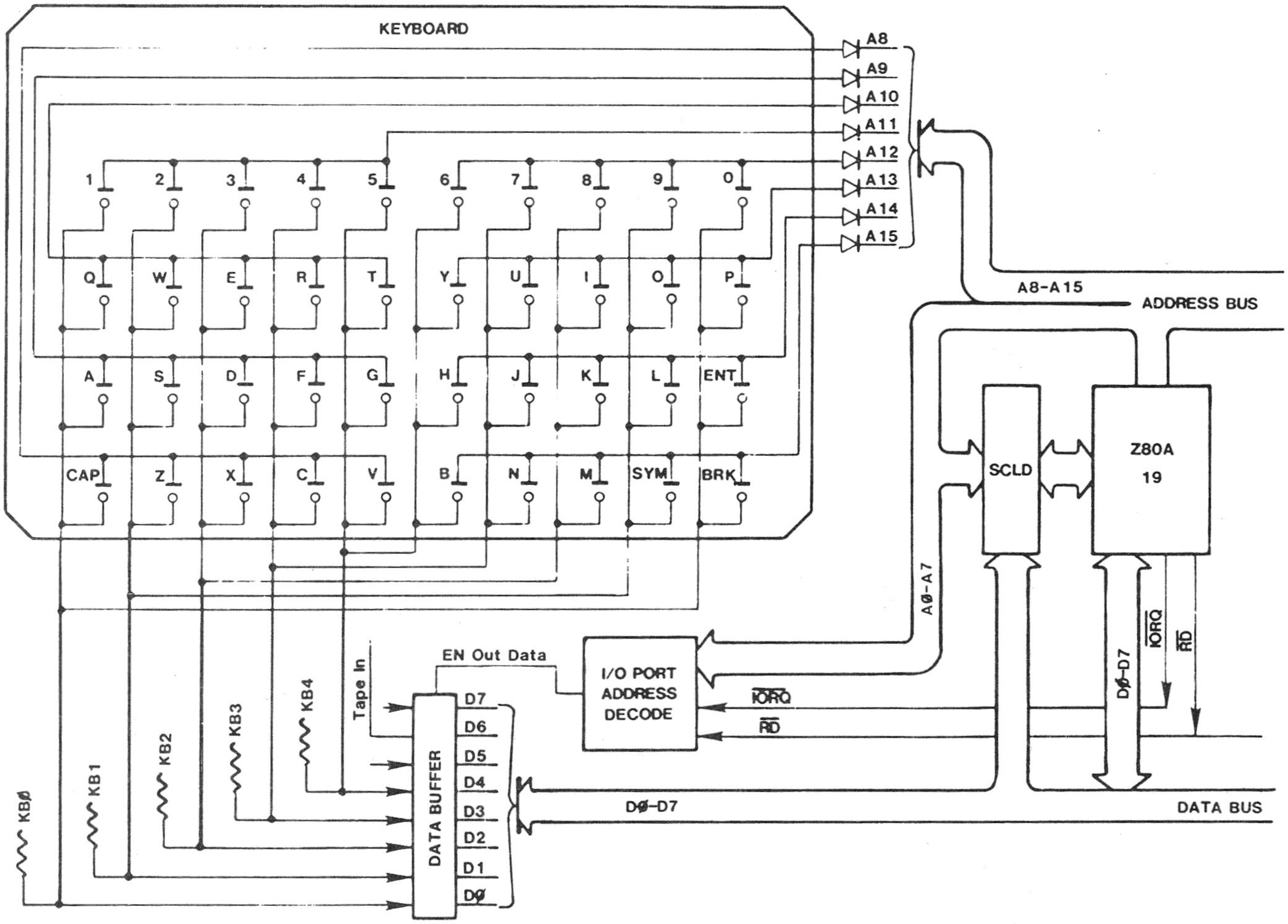
KEYBOARD
A8
A9
A10
A11
A12
A13
A14
A15
1
2
3
4
5
6
7
8
9
0
Q
W
E
R
T
Y
U
I
O
P
A
S
D
F
G
H
J
K
L
ENT
CAP
Z
X
C
V
B
N
M
SYM
BRK
A8-A15
ADDRESS BUS
SCLD
Z80A
19
A0-A7
D0-D7
$\overline{IORQ}$
$\overline{RD}$
EN Out Data
I/O PORT ADDRESS DECODE
$\overline{IORQ}$
$\overline{RD}$
Tape In
KB0
KB1
KB2
KB3
KB4
DATA BUFFER
D7
D6
D5
D4
D3
D2
D1
D0
D0-D7
DATA BUS

Figure 2.1.9. KEYBOARD SCHEMATIC

FIG. 2.1.10-1
DISPLAY FILE ORGANIZATION (NORMAL MODE)

		32 BYTES LINE 0		32 BYTES LINE 1		32 BYTES LINE 7	
B	Scan 0	4000	4001.....401F	4020.......403F	....	40E0	40E1 ......40FF
L	1	4100	4101.....411F	4120.......413F	....	41E0	41E1 ......41FF
O	2	4200	4201.....421F	4220.......423F	....	42E0	42E1 ......42FF
C	3	4300	4301.....431F	4320.......433F	....	43E0	43E1 ......43FF
K	4	4400	4401.....441F	4420.......443F	....	44E0	44E1 ......44FF
	5	4500	4501.....451F	4520.......453F	....	45E0	45E1 ......45FF
0	6	4600	4601.....461F	4620.......463F	....	46E0	46E1 ......46FF
	7	4700	4701.....471F	4720.......473F	....	47E0	47E1 ......47FF
		CHAR. POS. 0/0	CHAR. POS. 0/1 CHAR. POS. 0/31			CHAR. POS. 7/0	CHAR. POS. 7/1 CHAR. POS. 7/31

		32 BYTES LINE 8		32 BYTES LINE 9		32 BYTES LINE 15	
B	Scan 0	4800	4801.....481F	4820.......483F	....	48E0	48E1 ......48FF
L	1	4900	4901.....491F	4920.......493F	....	49E0	49E1 ......49FF
O	2	4A00	4A01.....4A1F	4A20.......4A3F	....	4AE0	4AE1 ......4AFF
C	3	4B00	4B01.....4B1F	4B20.......4B3F	....	4BE0	4BE1 ......4BFF
K	4	4C00	4C01.....4C1F	4C20.......4C3F	....	4CE0	4CE1 ......4CFF
	5	4D00	4D01.....4D1F	4D20.......4D3F	....	4DE0	4DE1 ......4DFF
1	6	4E00	4E01.....4E1F	4E20.......4E3F	....	4EE0	4EE1 ......4EFF
	7	4F00	4F01.....4F1F	4F20.......4F3F	....	4FE0	4FE1 ......4FFF
		CHAR. POS. 8/0	CHAR. POS. 8/1 CHAR. POS. 8/31			CHAR. POS. 15/0	CHAR. POS. 15/1 CHAR. POS. 15/31

		32 BYTES LINE 16		32 BYTES LINE 17		32 BYTES LINE 23	
B	Scan 0	5000	5001.....501F	5020.......503F	....	50E0	50E1 ......50FF
L	1	5100	5101.....511F	5120.......513F	....	51E0	51E1 ......51FF
O	2	5200	5201.....521F	5220.......523F	....	52E0	52E1 ......52FF
C	3	5300	5301.....531F	5320.......533F	....	53E0	53E1 ......53FF
K	4	5400	5401.....541F	5420.......543F	....	54E0	54E1 ......54FF
	5	5500	5501.....551F	5520.......553F	....	55E0	55E1 ......55FF
2	6	5600	5601.....561F	5620.......563F	....	56E0	56E1 ......56FF
	7	5700	5701.....571F	5720.......573F	....	57E0	57E1 ......57FF
		CHAR. POS. 16/0	CHAR. POS. 16/1 CHAR. POS. 16/31			CHAR. POS. 23/0	CHAR. POS. 23/1 CHAR. POS. 23/31

ATTRIBUTE FILE:

BLOCK 0	LINE 0 5800.....581F	LINE 1 5820.....583F	LINES 2 - 6 5840....................58DF	LINE 7 58E0......58FF
BLOCK 1	LINE 8 5900.....591F	LINE 9 5920.....593F	LINES 10-14 5940....................59DF	LINE 15 59E0......59FF
BLOCK 2	LINE 16 5A00.....5A1F	LINE 17 5A20.....5A3F	LINES 18-22 5A40....................5ADF	LINE 23 5AE0......5AFF

2.1.11 Video Generation

2.1.11.1 Composite Video

The U, V, and $\overline{Y}$ signals from the SCLD are supplied to the LM1889 and associated circuitry to produce composite video and modulated RF. This circuitry produces color vectors at approximately the following angles:

PHASE	TS 2068	NTSC STANDARD
	(Degrees)	(Degrees)
Blue	350	350
Magenta	64	62
Red	116	112
Green	242	240
Cyan	284	284
Yellow	170	170
Reference	224	180

The Front Porch, Sync Pulse, Back Porch, and Color Burst portions of the composite video signal are illustrated in Figure 2.1.11-1. In proper adjustment the following should be observed:

Sync Pulse = 40 +/- 2 IRE units
Color Burst = 35 to 45 IRE units
Color Burst Freq. = 3.579545 MHz.+/-70 Hz

The following three facts may aid in understanding problems with certain monitors.

1. The color burst is not synchronous with the waveform since it is generated from the 3.579545 MHz crystal and the waveform is derived from the 14.112 MHz crystal. The result is observed ripples at color boundaries, e.g. green to magenta.

2. The color burst duration is 8 cycles while standard TV broadcast stations provide 9 cycles. This "short" burst is a problem for some monitors.

3. The color burst starts 6.4 microseconds from the leading edge of sync. Many monitors are designed to expect this start as early as 5.3 microseconds, thus these monitors may not produce color when attached to the TS 2068.

FIGURE 2.1.11-1

COMPOSITE VIDEO SIGNALS

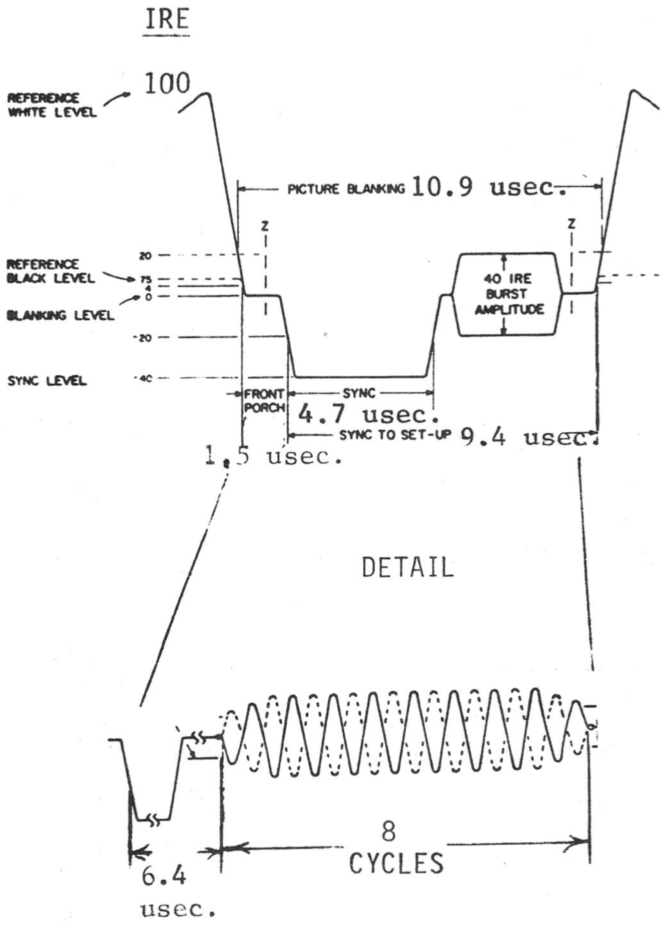
IRE
100
REFERENCE WHITE LEVEL
PICTURE BLANKING 10.9 usec.
Z
Z
20
REFERENCE BLACK LEVEL
7.5
0
BLANKING LEVEL
-20
SYNC LEVEL
-40
40 IRE BURST AMPLITUDE
FRONT PORCH
SYNC
4.7 usec.
SYNC TO SET-UP 9.4 usec.
1.5 usec.
DETAIL
8 CYCLES
6.4 usec.

2.1.11.2 RF Modulator

The composite video information is used to AM modulate the selected channel frequency via the LM1889 and associated Channel 2/3 tank circuitry. The modulated output is filtered through the output filter network to reduce harmonic generation to comply with FCC requirements. The RF circuitry is physically contained inside the RF-can at the rear left corner of the PCB (at the RF output jack). 75 ohms is the output impedance.

2.1.12 Cassette I/O

See Sections 2.1.13.2, 2.4.3 and 4.2.

2.1.13 Port Map

Table 2.1.13-1 summarizes the I/O addressing of ports utilized by the TS 2068. Details of the data bits of each of these ports is provided by the following sections.

2.1.13.1 Display Enhancement Control (Port FFH)

The display enhancement control register within the SCLD controls:

a) Selection of Enhanced Video Modes

b) Ink selection for 64-Column Mode

c) Enable/Inhibit the 17 ms interruption to the Z80

d) Selection of Extension ROM or Cartridge (see Section 2.1.8.1)

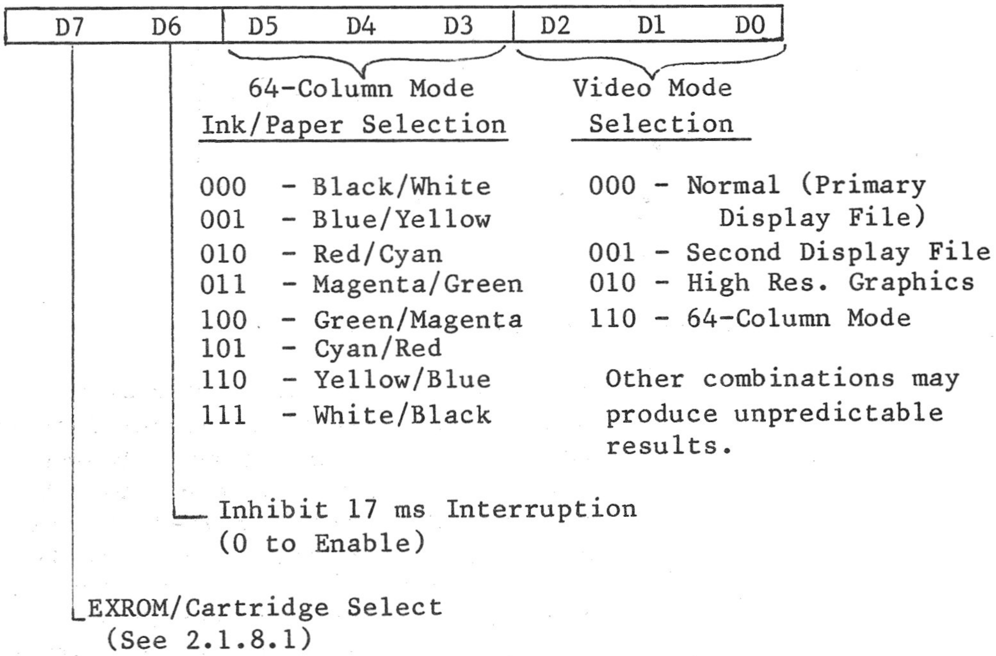

64-Column Mode Ink/Paper Selection

000 - Black/White
001 - Blue/Yellow
010 - Red/Cyan
011 - Magenta/Green
100 - Green/Magenta
101 - Cyan/Red
110 - Yellow/Blue
111 - White/Black

Video Mode Selection

000 - Normal (Primary Display File)
001 - Second Display File
010 - High Res. Graphics
110 - 64-Column Mode

Other combinations may produce unpredictable results.

Inhibit 17 ms Interruption (0 to Enable)

EXROM/Cartridge Select (See 2.1.8.1)

TABLE 2.1.13-1

I/O PORT MAP

FUNCTION	PORT ADDRESS (HEX)	(DECIMAL)	(BINARY)	OPERATION	REFERENCE
Display Enhancement Control	FF	255	11111111	R/W	2.1.10, 2.1.13.1, 3.2.2.3, 5.2
Keyboard/Tape I/O	FE	254	11111110	R/W	2.1.9, 2.1.13.2, 2.4.3, 4.1.1, 4.2
Reserved	FD	253	11111101		
Reserved	FC	252	11111100		
TS 2040 Printer	FB	251	11111011	R/W	2.1.13.3, 4.1.3
Sound Chip & Joystick Data	F6	246	11110110	R/W	2.1.6, 2.1.7, 2.1.13.4 2.4.4, 4.3, 4.5
Sound Chip Address	F5	245	11110101	W	Same
Horizontal Select Register	F4	244	11110100	R/W	2.1.8.1

2.1.13.2 Keyboard/Tape I/O (Port FEH)

Port FEH is used to input Keyboard and Tape data and to output Border color, Tape data, and Sound (BEEP) tones.

READ (IN)

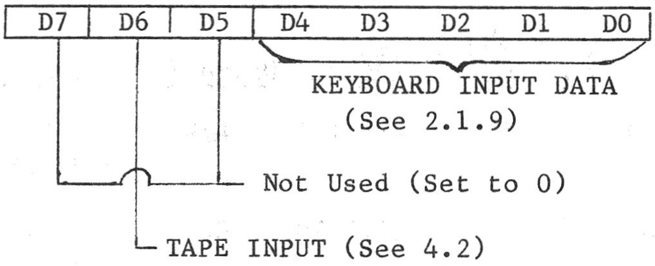
D7
D6
D5
D4
D3
D2
D1
D0
KEYBOARD INPUT DATA
(See 2.1.9)
Not Used (Set to 0)
TAPE INPUT (See 4.2)

WRITE (OUT)

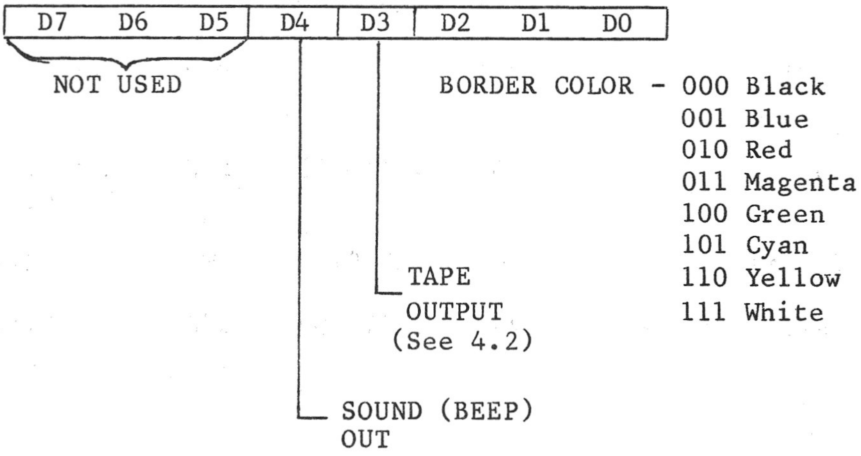
D7
D6
D5
D4
D3
D2
D1
D0
NOT USED
BORDER COLOR - 000 Black
001 Blue
010 Red
011 Magenta
100 Green
101 Cyan
110 Yellow
111 White
TAPE OUTPUT (See 4.2)
SOUND (BEEP) OUT

2.1.13.3 TS 2040 Printer (Port 1XXXX0XX)

The TS 2040 Printer peripheral is written to and status read from via OUT and IN instructions with Bit 7 = 1 and Bit 2 = 0 (other bits are not decoded by the printer).

READ (IN)

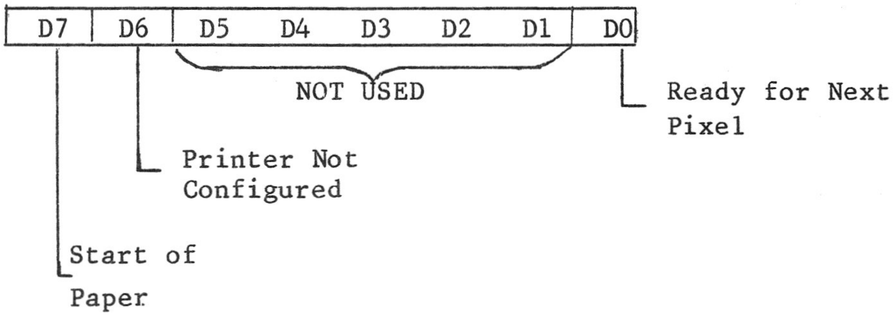
D7
D6
D5
D4
D3
D2
D1
D0
NOT USED
Ready for Next Pixel
Printer Not Configured
Start of Paper

WRITE (OUT)

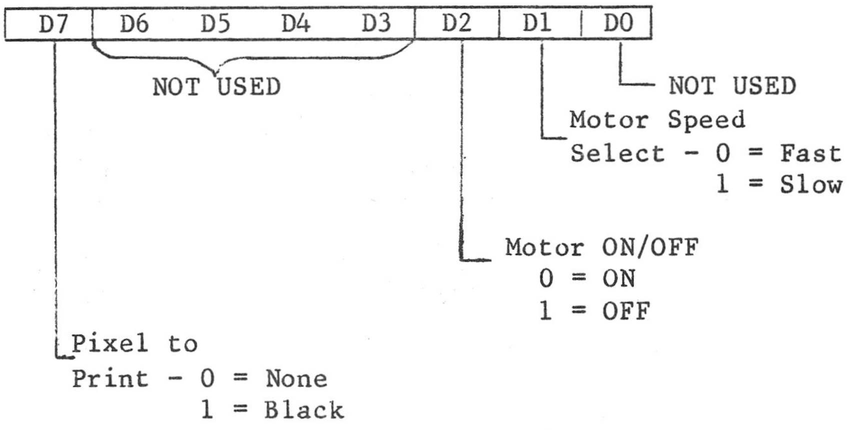
D7
D6
D5
D4
D3
D2
D1
D0
NOT USED
NOT USED
Motor Speed
Select - 0 = Fast
1 = Slow
Motor ON/OFF
0 = ON
1 = OFF
Pixel to
Print - 0 = None
1 = Black

2.1.13.4 Sound Chip & Joystick (Ports F5H and F6H)

Ports F5H and F6H are used to control and access the Sound Generator and the Joysticks. Details of the registers available via these ports is contained in Sections 2.1.6 and 2.1.7.

2.1.13.5 Horizontal Select Register (Port F4H)

The HSR addressed via Port F4H is used in the control of the Bank Switching logic as detailed in Section 2.1.8. Each bit, when set, enables the corresponding 8K memory "chunk" in either the Dock Bank (Port FF, Bit 7=0) or the Extension ROM Bank (Port FF, Bit 7=1). The HSR must be set to all zeroes in order to enable the entire Home Bank.

2.2 Schematic Diagram

Appendix D contains a detailed schematic diagram of the TS 2068.

2.3 Unit Absolute Ratings

FUNCTION	DESCRIPTION	MIN	MAX
TS	Storage Temperature	-40°C	+65°C
VAC	AC Line Voltage	105V	130V
Ta	Operating Ambient Temp	0°C	40°C
Vin	Voltage on any Logic Pin	-0.3V	+5.3V
Vin (EAR)	EAR input Peak AC	-2.0V	+5.0V
Vdc (IN)	Input DC Voltage	14.75V	26V

2.4 Interfaces and Connectors

The TS2068 has a number of specialized interfaces that are accessible via the following connectors:

CONNECTOR	TYPE	LOCATION
System Bus	2X32 Card Edge	Right Rear
Cartridge	2X18 Card Edge	Under TCC door
MIC	1/8" Mini Phone	Rear
EAR	1/8" Mini Phone	Rear
Player 1 Joystick	9-pin "D"	Left Side
Player 2 Joystick	9-pin "D"	Right Side
Monitor	RCA Phono	Rear
TV	RCA Phono	Rear
Keyboard	14-pin SIP	Inside-Left Rear
AC Adapter		Rear

2.4.1 System Bus Connector - P1

The TS2068 provides a 2 X 32 pin connector, which is designated as P1, at the right rear corner of the console. The mechanical, functional, and electrical requirements of the system buss connector are detailed in the following tables and figures:

FIGURE/TABLE	TITLE
Figure 2.4.1-1	P1 Mating Connector Mechanical Requirements
Figure 2.4.1-2	P1 Signal Layout
Table 2.4.1 - 1	P1 Signal Definition
Table 2.4.1 - 2	P1 Signal Electrical Characteristics

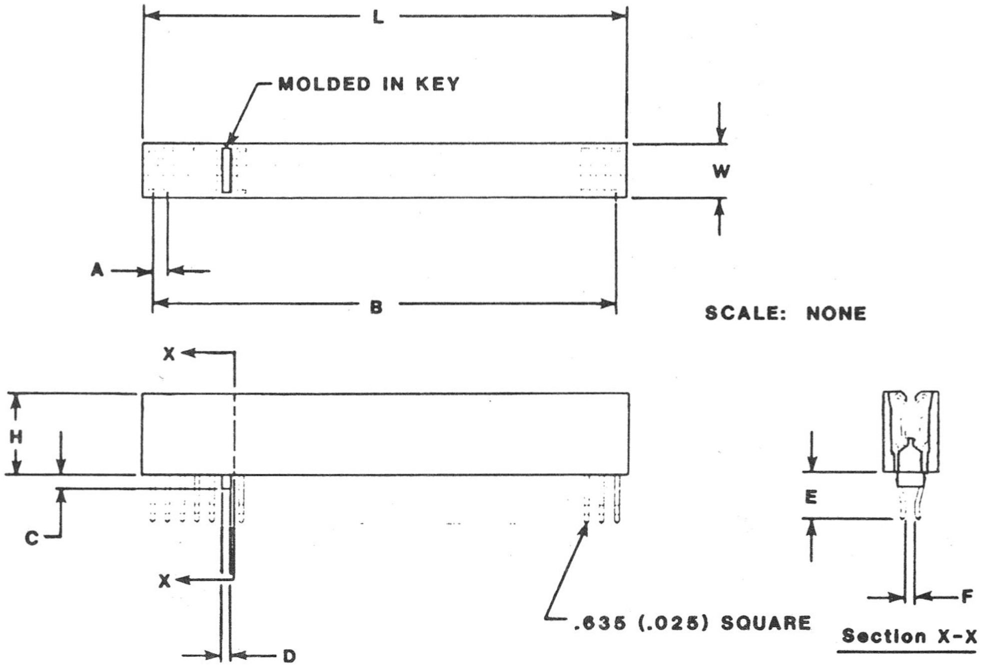

SPECIFICATIONS:

LTR	DIMENSION *
L	82.55 (3.25)
W	9.525±0.127 (.375±.005)
H	13.97±0.254 (.550±.010)
A	2.54 (.100)
B	31 EQUAL SPACES AT 2.54(.100)=78.74(3.100)
C	2.54 (.10)
D	1.727 (.068) MAX
E	8.382±0.508 (.330±.020)
F	FOR 1.575(.062) BOARD

*All dimensions are in millimeters, dimensions shown (XX.X) are in inches.

NOTES:

1. INSULATOR MATERIAL: Insulator body shall be 30% glass-filled polyester and shall meet UL94V-0 requirements.
2. CONTACT MATERIAL: Contact material shall be phosphor bronze.
3. CONTACT FINISH: Contacts shall be selectively plated with gold, 0.00038 (.000015) thick over nickel on contact surfaces.
4. INSERTION FORCE: Insertion forces shall be 170.1-283.5 grams (6-10 oz) per contact pair using a 1.575 (.062) flat steel test blade .
5. WITHDRAWAL FORCE: Withdrawal forces shall be 226.8-340.2 grams (8-12 oz) per contact pair using a 1.575 (.062) flat test blade.
6. NORMAL FORCE: Normal force shall be 85.05 grams (3 oz) minimum when mated with a 1.37 (.054) thick test board.
7. PURCHASE FROM: San Diego Microtronics INC. San Diego,CA 92123.

64 PIN CONNECTOR

Figure 4.1-1. PI MATING CONNECTOR MECHANICAL REQUIREMENTS

FIGURE 2.4.1-2

P1 CONNECTOR SIGNAL LAYOUT

COMPONENT SIDE

TS1000 COMPATIBLE

	A (COMP SIDE)	B (NON COMP SIDE)
1	SIG GND	SIG GND
2	EAR	SPKR/TAPE OUT
3	A7RB	+15V
4	D7	+5V
5	DZIN	NOT USED
6	SLOT	SLOT
7	D0	PWR GND
8	D1	PWR GND
9	D2	Ø
10	D6	A0
11	D5	A1
12	D3	A2
13	D4	A3
14	$\overline{\text{INT}}$	A15B
15	$\overline{\text{NMI}}$	A14B
16	$\overline{\text{HALT}}$	A13B
17	$\overline{\text{MREQB}}$	A12
18	$\overline{\text{IORQB}}$	A11
19	$\overline{\text{RDB}}$	A10
20	$\overline{\text{WRB}}$	A9
21	$\overline{\text{BUSAK}}$	A8
22	$\overline{\text{WAIT}}$	A7
23	$\overline{\text{BUSRQ}}$	A6
24	$\overline{\text{RESET}}$	A5
25	$\overline{\text{MI}}$	A4
26	$\overline{\text{RFSHB}}$	NOT USED
27	$\overline{\text{EXROM}}$	R
28	$\overline{\text{ROSCS}}$	G
29	$\overline{\text{BE}}$	B
30	IOA5	BUSISO
31	SOUND	VIDEO
32	SIG GND	SIG GND

NON-COMPONENT SIDE

(VIEW FROM FRONT OF COMPUTER)

TABLE 2.4.1 - 1

P1 SIGNAL DEFINITION

PIN #	SIGNAL NAME	DESCRIPTION
1A	GND	Signal Ground
1B	GND	Signal Ground
2A	EAR	EAR Input
2B	SPKR/TAPE OUT	Speaker/Tape Output
3A	A7RB	Refresh Address Bit 7 Buffered
3B	+15V	+15 Volts DC
4A	D7	Data Bus Bit 7
4B	+5V	+5 Volts
5A	DZIN	Daisy In (Not Connected)
5B	Not Used	--
6A	Slot	--
6B	Slot	--
7A	D0	Data Bus Bit 0
7B	GND	Power Ground
8A	D1	Data Bus Bit 1
8B	GND	Power Ground
9A	D2	Data Bus Bit 2
9B	$\overline{0}$	CPU Clock (Inverted)
10A	D6	Data Bus Bit 6
10B	A0	Address Bus Bit 0
11A	D5	Data Bus Bit 5
11B	A1	Address Bus Bit 1
12A	D3	Data Bus Bit 3
12B	A2	Address Bus Bit 2
13A	D4	Data Bus Bit 4
13B	A3	Address Bus Bit 3
14A	$\overline{\text{INT}}$	Interrupt Request (Active Low)
14B	A15B	Address Bus Bit 15, Buffered
15A	$\overline{\text{NMI}}$	Non-Maskable Int.(Active Low)
15B	A14B	Address Bus Bit 14, Buffered
16A	$\overline{\text{HALT}}$	CPU HALT Indicator (Active Low)
16B	A13B	Address Bus Bit 13, Buffered
17A	$\overline{\text{MREQB}}$	Memory Request (Active Low),Bfrd.
17B	A12	Address Bus Bit 12
18A	$\overline{\text{IORQB}}$	I/O Request (Active Low), Bfrd.
18B	A11	Address Bus Bit 11
19A	$\overline{\text{RDB}}$	Read (Active Low), Buffered
19B	A10	Address Bus Bit 10
20A	$\overline{\text{WRB}}$	Write (Active Low), Buffered
20B	A9	Address Bus Bit 9
21A	$\overline{\text{BUSAK}}$	Bus Acknowledge (Active Low)
21B	A8	Address Bus Bit 8
22A	$\overline{\text{WAIT}}$	CPU WAIT (Active Low)

TABLE 2.4.1 - 1

P1 SIGNAL DEFINITION
(continued)

PIN #	SIGNAL NAME	DESCRIPTION
22B	A7	Address Bus Bit 7
23A	$\overline{\text{BUSRQ}}$	Bus Request (Active Low)
23B	A6	Address Bus Bit 6
24A	$\overline{\text{RESET}}$	CPU Reset (Active Low)
24B	A5	Address Bus Bit 5
25A	$\overline{\text{M1}}$	CPU M1 State (Active Low)
25B	A4	Address Bus Bit 4
26A	$\overline{\text{RFSHB}}$	Refresh (Active Low),Buffered
26B	DZOUT	Daisy Out (Not Connected)
27A	$\overline{\text{EXROM}}$	Extension ROM Enable (Active Low)
27B	R	Color Signal - Red
28A	$\overline{\text{ROSCS}}$	ROS Chip Select (Active Low) (Dock Bank Enable)
28B	G	Color Signal - Green
29A	$\overline{\text{BE}}$	Bank Enable (Active Low)
29B	B	Color Signal - Blue
30A	IOA5	
30B	BUSISO	
31A	SOUND	Analog Sound Signal Output(0-5V)
31B	VIDEO	Composite Video Signal Output
32A	GND	Signal Ground
32B	GND	Signal Ground

NOTE: All A Pins are on component side of board
All B Pins are on non-component (soldering) side of board

TABLE - 2.4.1-2

P1 SIGNAL ELECTRICAL CHARACTERISTICS

MNEMONIC	OUTPUTS FROM TS2068				INPUTS TO TS2068			
	CAPACITIVE LOADING MAX (PF)	V(OL) MAX VOLTS	I(LOAD) MAX (MA)	V(OH) MIN VOLTS	V(IL) MAX VOLTS	V(IH) MIN VOLTS	I IN (MAX) µA	INPUT CAPACITIVE LOADING MAX (PF)
A15B	30	0.5	1.8	2.4	0.8	2.0	1800	40
A14B	30	0.5	1.8	2.4	0.8	2.0	1800	40
A13B	30	0.5	1.8	2.4	0.8	2.0	1800	40
A12	30	0.4	1.8	2.4	0.8	2.0	1800	74
A11	30	0.4	1.8	24	0.8	2.0	1800	74
A10	30	0.4	1.8	24	0.8	2.0	1800	74
A9	30	0.4	1.8	2.4	0.8	2.0	1800	76
A8	30	0.4	1.8	2.4	0.8	2.0	1800	76
A7	30	0.4	1.8	2.4	0.8	2.0	1800	72
A6	30	0.4	1.8	2.4	0.8	2.0	1800	72
A5	30	0.4	1.8	2.4	0.8	2.0	1800	72
A4	30	0.5	1.8	2.4	0.8	2.0	1800	72
A3	30	0.4	1.8	2.4	0.8	2.0	1800	72
A2	30	0.4	1.8	2.4	0.8	2.0	1800	72
A1	30	0.4	1.8	2.4	0.8	2.0	1800	72
A0	30	0.4	1.8	2.4	0.8	2.0	1800	98
A7RB	30	0.5	0.35	2.7	0.8	2.0	----	120
$\overline{\text{IORQB}}$	30	0.5	12	2.4	0.8	2.0	20	10
$\overline{\text{WRB}}$	30	0.5	12	2.4	0.8	2.0	20	10
$\overline{\text{RFSHB}}$	30	0.5	12	2.4	0.8	2.0	20	10
$\overline{\text{EXROM}}$	30	0.5	12	2.4	---	---	----	--
$\overline{\text{ROSCS}}$	30	0.5	12	2.4	---	---	----	--
$\overline{\text{MREQB}}$	30	0.5	12	2.4	0.8	2.0	20	10
$\overline{\text{RDB}}$	30	0.5	12	2.4	0.8	2.0	20	10
$\overline{\text{MI}}$	30	0.4	1.8	2.4	0.8	2.0	20	10
$\overline{\text{BE}}$	--	---	---	---	0.8	2.0	10	12
$\overline{\text{BUSAK}}$	30	0.4	1.8	2.4	---	---	----	--
$\overline{\text{WAIT}}$	--	---	---	---	0.8	2.0	----	10
$\overline{\text{HALT}}$	30	0.4	1.8	2.4	0.8	2.0	----	10
$\overline{\text{NMI}}$	--	---	---	---	0.8	2.0	----	10
$\overline{\text{INT}}$	OPEN COLLECTOR WITH PULL-UP							

TABLE -2.4.1-2
(cont.)
P1 SIGNAL ELECTRICAL CHARACTERISTICS

	OUTPUTS FROM TS2068				INPUTS TO TS2068			
MNEMONIC	CAPACITIVE LOADING MAX (PF)	V(OL) MAX VOLTS	I(LOAD) MAX (MA)	V(OH) MIN VOLTS	V(IL) MAX VOLTS	V(IH) MIN VOLTS	I IN (MAX) µA	INPUT CAPACITIVE LOADING MAX (PF)
R	50	0.4	1.8	2.4	---	---	----	--
G	50	0.4	1.8	2.4	---	---	----	--
B	50	0.4	1.8	2.4	---	---	----	--
VIDEO	TO 75 ohm COAX							
D0	30	0.4	1.8	2.4	0.8	2.0	20	120
D1	30	0.4	1.8	2.4	0.8	2.0	20	120
D2	30	0.4	1.8	2.4	0.8	2.0	20	120
D3	30	0.4	1.8	2.4	0.8	2.0	20	120
D4	30	0.4	1.8	2.4	0.8	2.0	20	120
D5	30	0.4	1.8	2.4	0.8	2.0	20	120
D6	30	0.4	1.8	2.4	0.8	2.0	20	120
D7	30	0.4	1.8	2.4	0.8	2.0	20	120
SPKP/TAPE OUT	500	0.2	0.04	0.3-0.5	---	---	----	--
EAR	15	0.5	1.6	2.4	+/- 1.3	+/- 5.0	----	--
SOUND	100	0	---	2.5	-0.3	+5.0	----	--
BUSRQ	--	---	---	---	0.8	2.0	----	10
RESET	1 µF WITH 220K PULL-UP							
IOA5	--	---	---	---	---	---	----	--

2.4.1.1 Attachment of an RGB Monitor

The TS 2068 provides via the P1 rear-edge connector the ability to attach an RGB monitor for excellent picture clarity and resolution. The TTL-level logic signals appear directly on the rear-edge connector of the TS 2068 -- the necessary synch signals can be derived from the simple synch stripper/separator circuit described here.

The Schematic of Figure 2.4.1-3 shows the required connections and electronics. Attachment is via the 64-pin keyed P1 connector. Shielding should not normally be required, but ferrite beads are recommended on each wire to minimize EMI, TVI, etc.

Circuit Operation - R1 and the base-emitter junction of Q1 operate as a DC restoration circuit with current flowing only when the composite video input signal from connector pin B31 is at the synch level. With the charge maintained on C1, Q1 conducts only during the synch pulse interval (not during the color burst time). During this conduction interval, the composite synch signal appears in inverted form on the collector of Q1. The Q2 stage simply re-inverts the signal, providing at its collector a composite synch signal for the connected monitor.

To provide a separated Vertical synch pulse, R5 and C3 filter the output of Q1 to partially eliminate the Horizontal synch pulses which are shorter than the Vertical synch pulses. The partially filtered inverted signal is re-inverted by Q3, then R6 and C4 complete the elimination of the Horizontal synch pulses so that a separate Vertical synch pulse is supplied for the attached monitor.

Signals R, G, and B from connector pins B27, B28, and B29 can be supplied directly to the attached monitor.

Q1, Q3: 2N2907 OR EQUAL

Q2: 2N2222 OR EQUAL

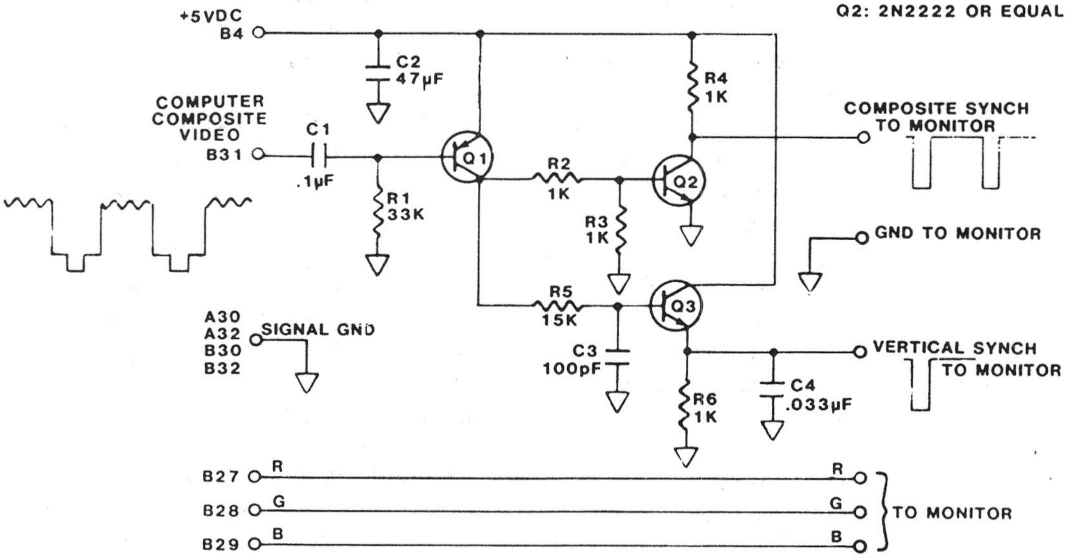
+5VDC
B4
C2
47µF
R4
1K
COMPUTER
COMPOSITE
VIDEO
B31
C1
.1µF
R1
33K
Q1
R2
1K
Q2
R3
1K
COMPOSITE SYNCH
TO MONITOR
GND TO MONITOR
R5
15K
Q3
C3
100pF
A30
A32
B30
B32
SIGNAL GND
VERTICAL SYNCH
TO MONITOR
C4
.033µF
R6
1K
B27
B28
B29
R
G
B
R
G
B
TO MONITOR

Figure 2.4.1-3. SCHEMATIC FOR RGB MONITOR CONNECTION

2.4.2 Cartridge Connector - J4

The TS2068 provides a 2 X 18 pin connector (designated J4 on the schematic) under the door at the front right of the console. The table and figures listed below detail the mechanical, functional, and electrical requirements and limits of the J4 Cartridge Connector.

FIGURE/TABLE	TITLE
Figure 2.4.2-1	J4 Mating PCB Mechanical Requirements
Figure 2.4.2-2	J4 Signal Layout
Table 2.4.2-1	J4 Signal Definition
Table 2.4.2-2	J4 Signal Electrical Characteristics

FIGURE 2.4.2-1

J4 MATING PCB MECHANICAL REQUIREMENTS

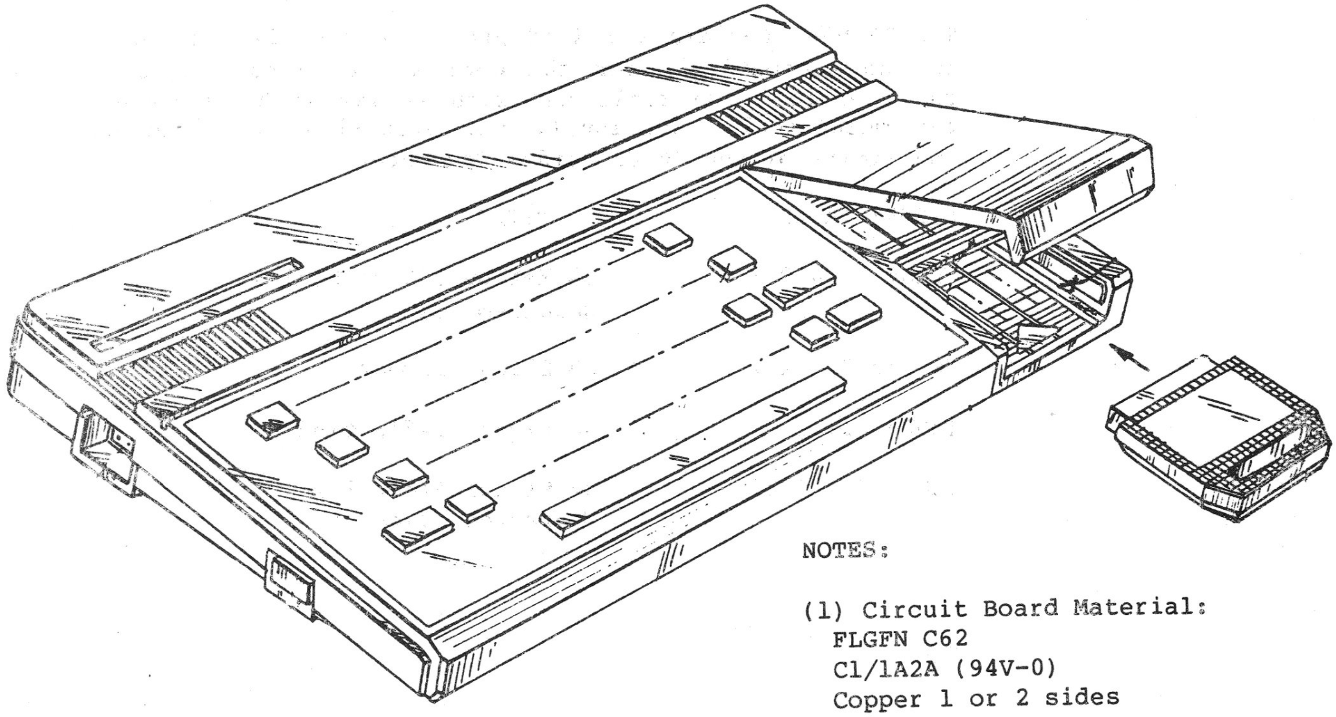

NOTES:

(1) Circuit Board Material:
FLGFN C62
C1/1A2A (94V-0)
Copper 1 or 2 sides

(2) Contact Fingers: Min. 10 millionth MIL-G - 45204 Gold over .00005 to .00010 inch low stress nickel.

(3) Contact Fingers 2 and 36 should be longer than other fingers to latch-up when inserted with power on.

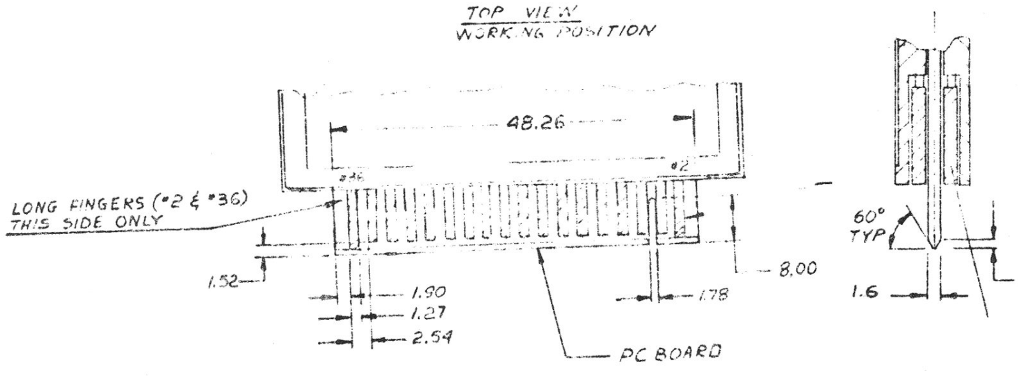
TOP VIEW
WORKING POSITION
48.26
#36
#2
LONG FINGERS (#2 & #36)
THIS SIDE ONLY
1.52
1.90
1.27
2.54
PC BOARD
1.78
8.00
60°
TYP
1.6
.73

FIGURE 2.4.2-2

J4 SIGNAL LAYOUT

(View from Front)

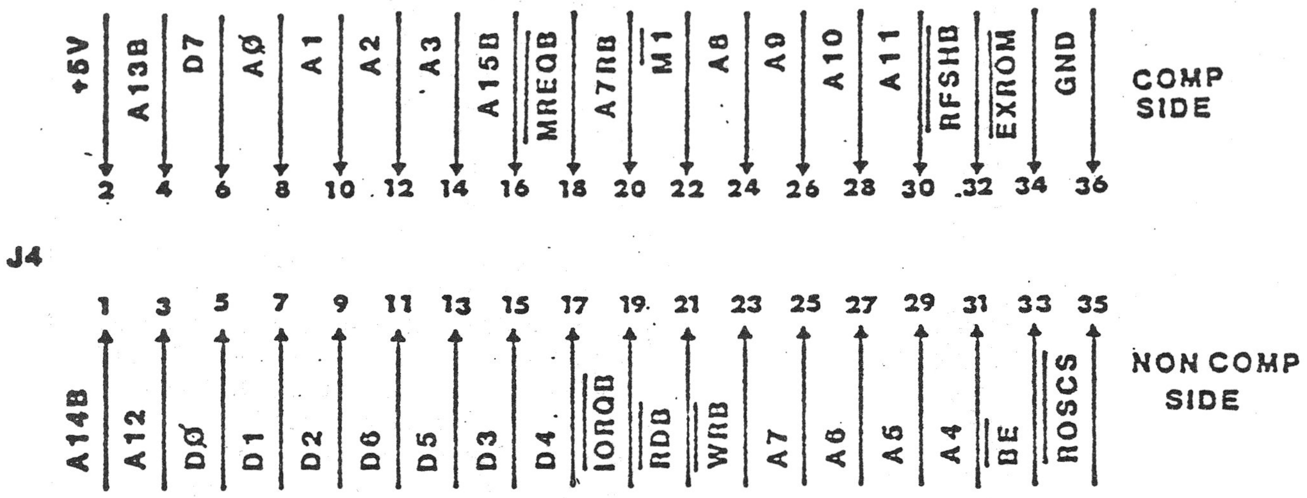
+5V
A13B
D7
A0
A1
A2
A3
A15B
MREQB
A7RB
M1
A8
A9
A10
A11
RFSHB
EXROM
GND
COMP SIDE
2
4
6
8
10
12
14
16
18
20
22
24
26
28
30
32
34
36
J4
1
3
5
7
9
11
13
15
17
19
21
23
25
27
29
31
33
35
A14B
A12
D0
D1
D2
D6
D5
D3
D4
IORQB
RDB
WRB
A7
A6
A5
A4
BE
ROSCS
NON COMP SIDE

TABLE 2.4.2-1

J4 CONNECTOR SIGNAL DEFINITIONS

PIN #	SIGNAL NAME	DESCRIPTION
1	A14B	Address Bus Bit 14, Buffered
2	+5V	+5 volts DC
3	A12	Address Bus Bit 12
4	A13B	Address Bus Bit 13, Buffered
5	D0	Data Bus Bit 0
6	D7	Data Bus Bit 7
7	D1	Data Bus Bit 1
8	A0	Address Bus Bit 0
9	D2	Data Bus Bit 2
10	A1	Address Bus Bit 1
11	D6	Data Bus Bit 6
12	A2	Address Bus Bit 2
13	D5	Data Bus Bit 5
14	A3	Address Bus Bit 3
15	D3	Data Bus Bit 3
16	A15B	Address Bus Bit 15,Buffered
17	D4	Data Bus Bit 4
18	$\overline{\text{MREQB}}$	Memory Request (Active Low),Bfrd.
19	$\overline{\text{IORQB}}$	I/O Request (Active Low),Buffered
20	A7RB	Refresh Address Bit 7, Buffered
21	$\overline{\text{RDB}}$	Read (Active Low), Buffered
22	$\overline{\text{M1}}$	CPU M1 State (Active Low)
23	$\overline{\text{WRB}}$	Write (Active Low), Buffered
24	A8	Address Bus Bit 8
25	A7	Address Bus Bit 7
26	A9	Address Bus Bit 9
27	A6	Address Bus Bit 6
28	A10	Address Bus Bit 10
29	A5	Address Bus Bit 5
30	A11	Address Bus Bit 11
31	A4	Address Bus Bit 4
32	$\overline{\text{RFSHB}}$	Refresh (Active Low), Buffered
33	$\overline{\text{BE}}$	Bank Enable (Active Low)
34	$\overline{\text{EXROM}}$	Extension ROM Enable (Active Low)
35	$\overline{\text{ROSCS}}$	ROS Chip Select (Active Low) (Dock Bank Enable)
36	GND	Ground

TABLE 2.4.2-2

J4 SIGNAL ELECTRICAL CHARACTERISTICS

MNEMONIC	OUTPUTS FROM TS2068 CAPACITIVE LOADING MAX (PF)	V(OL) MAX VOLTS	I(LOAD) MAX (MA)	V(OH) MIN VOLTS	I(LOAD)* MIN (uA)	INPUTS TO TS2068 V(IL) MAX VOLTS	V(IH) MIN VOLTS	I IN (MAX) µA	INPUT CAPACITIVE LOADING MAX (PF)
A15B	30	0.5	1.8	2.4	10				
A14B	30	0.5	1.8	2.4	10				
A13B	30	0.5	1.8	2.4	10				
A12	30	0.4	1.8	2.4	10				
A11	30	0.4	1.8	2.4	10				
A10	30	0.4	1.8	2.4	10				
A9	30	0.4	1.8	2.4	10				
A8	30	0.4	1.8	2.4	10				
A7	30	0.4	1.8	2.4	10				
A6	30	0.4	1.8	2.4	10				
A5	30	0.4	1.8	2.4	10				
A4	30	0.4	1.8	2.4	10				
A3	30	0.4	1.8	2.4	10				
A2	30	0.4	1.8	2.4	10				
A1	30	0.4	1.8	2.4	10				
A0	30	0.4	1.8	2.4	10				
A7RB	30	0.5	0.35	2.7					
ROSCS	30	0.4	1.8	2.4	10				
MREQB	30	0.5	1.8	2.4	10				
RDB	30	0.5	1.8	2.4	10				
IORQB	30	0.5	12	2.4	10				
WRB	30	0.5	12	2.4	10				
RFSHB	30	0.5	12	2.4	10				
EXROM	30	0.5	12	2.4	10				
MI	30	0.5	12	2.4	10				
D0	30	0.4	1.8	2.4		0.8	2.0	15	120
D1	30	0.4	1.8	2.4		0.8	2.0	15	120
D2	30	0.4	1.8	2.4		0.8	2.0	15	120
D3	30	0.4	1.8	2.4		0.8	2.0	15	120

TABLE 2.4.2-2
(cont)
J4 SIGNAL ELECTRICAL CHARACTERISTICS

	------------ OUTPUTS FROM TS2068 ----------					---------------- INPUTS TO TS2068 --------			
MNEMONIC	CAPACITIVE LOADING MAX (PF)	V(OL) MAX VOLTS	I(LOAD) MAX (MA)	V(OH) MIN VOLTS	I(LOAD)* MIN (uA)	V(IL) MAX VOLTS	V(IH) MIN VOLTS	I IN (MAX) µA	INPUT CAPACITIVE LOADING MAX (PF)
D4	30	0.4	1.8	2.4		0.8	2.0	15	120
D5	30	0.4	1.8	2.4		0.8	2.0	15	120
D6	30	0.4	1.8	2.4		0.8	2.0	15	120
D7	30	0.4	1.8	2.4		0.8	2.0	15	120
Vcc (+5V)	--	5.25	300	4.75					
GND	--	--	---	---					

2.4.3 Cassette I/O

The EAR and MIC connectors provided on the rear of the TS2068 are 1/8" mini-phone jacks requiring 1/8" mini-phone plugs as mating connectors.

The MIC output is filtered by a low-pass filter with a breakpoint of 2.5KHz and provides a signal output of 0.15 to 0.67 V p-p.

The EAR input is filtered by a low-pass filter with a breakpoint of 23 KHz. Input voltages should be between 4.0 and 10.0 V p-p.

2.4.4 Joystick

The joystick input connectors, one on each side of the TS2068 case, are standard 9-pin "D" type connectors for use with 5-switch type joysticks.

Connector layout and the function of each pin is given in Figure 2.4.4-1 and Table 2.4.4-1, respectively.

FIGURE 2.4.4-1

JOYSTICK CONNECTOR

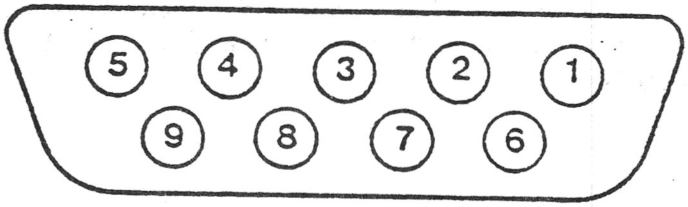

TABLE 2.4.4-1

JOYSTICK CONNECTOR SIGNAL ASSIGNMENT

P/N	SIGNAL NAME	I/O PORT BIT	FUNCTION
1	$\overline{\text{DIR1}}$	0	STICK UP
2	$\overline{\text{DIR2}}$	1	STICK DOWN
3	$\overline{\text{DIR3}}$	2	STICK LEFT
4	$\overline{\text{DIR4}}$	3	STICK RIGHT
5	---	----	not used
6	$\overline{\text{BUTTON}}$	7	PUSH BUTTON
7	5V	---	5 VOLT POWER
8	$\overline{\text{READ STROBE}}$	---	ADDRESS BIT 8 OR 9*
9	GND	---	POWER GROUND

*When Address Bit 8 is high, the READ strobe to the left joystick is driven low. When address Bit 9 is high, the READ strobe to the right joystick is driven low.

2.4.5 Composite Monitor Output

The MONITOR output on the rear of the TS2068 provides a 1 V p-p (+/- 20%) composite color video signal output to an RCA phono jack which is mated by a standard phono plug into a 75 ohm coax cable. See Section 2.1.11.1.

2.4.6 RF Output

The TV output on the rear of the TS2068 provides a modulated color video signal on VHF Channel 2 or Channel 3 as selected by the channel select switch on the bottom of the unit. Connection to the RCA phono jack output should be via a standard phono plug and 75 ohm coax cable. See Section 2.1.11.2.

Channel frequencies provided are

Channel 2	55,250 +/- 100 KHz
Channel 3	61,250 +/- 100 KHz

Output levels are less than 3 milliwatts as limited by the Federal Communications Commission.

2.4.7 Keyboard Interface - J9 Connector

Located on the PCB inside the TS 2068 is a 14-pin single-in-line flex cable connector (AMP TRIO-MATE P/N 1-520315-4 or equivalent). Signals are as listed below:

PIN	SIGNAL
0	GND
1	KB0
2	KB1
3	KB2
4	KB3
5	KB4
6	CR6/A11
7	CR7/A10
8	CR8/A9
9	CR9/A12
10	CR10/A13B
11	CR11/A8
12	CR12/A14B
13	CR13/A15B

Any modification to or replacement of the keyboard supplied must consider the following:

(1) Contact resistance less than 200 ohms.

(2) Bounce less than 10 ms.

(3) Capacitance per line less than 20 pF (0 or 1 key depressed); less than 40 pF (more than 1 key depressed).

2.4.8 AC Adapter Power Plug

The AC Adapter provided with the TS 2068 provides unregulated DC to the unit as described in Section 2.1.1 Mechanical details of the plug which mates to the TS 2068 are shown below:

FIGURE 2.4.8-1

AC ADAPTER PLUG

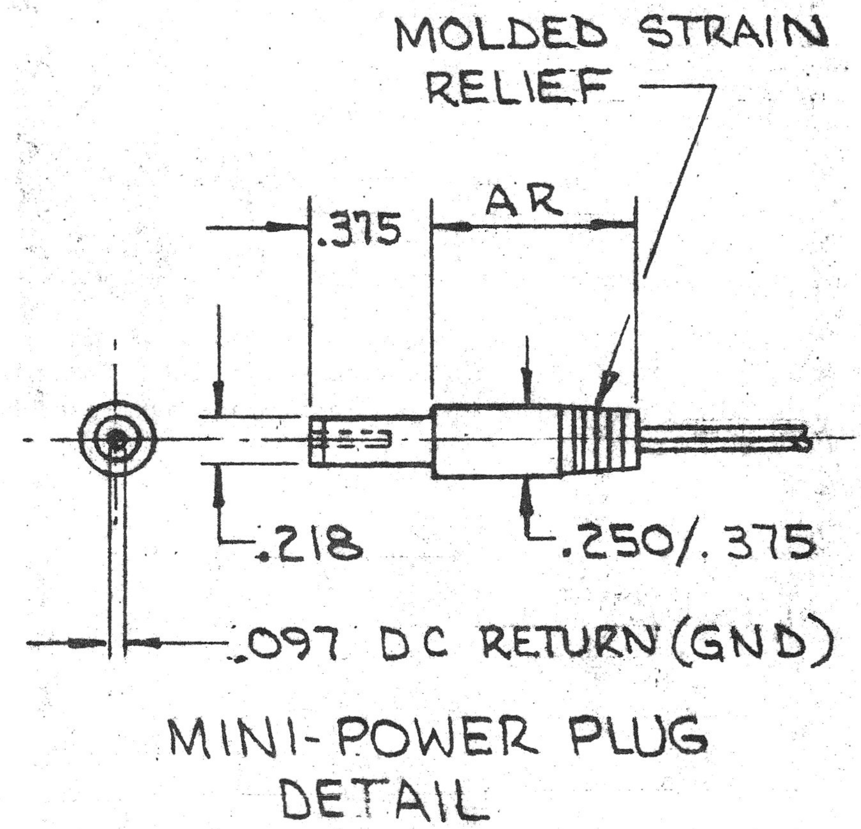
MOLDED STRAIN
RELIEF
.375
AR
.218
.250/.375
.097 DC RETURN (GND)
MINI-POWER PLUG
DETAIL

3.0 SYSTEM SOFTWARE GUIDE

3.1 Identifier

Location 19 (13H) of the Home Bank ROM is used to identify the revision level of the System Software. The initial version is identified by this location having a value of 255 (FFH). Any subsequent versions will decrement this value by 1, e.g., the first revision would be identified by a value of 254 (FEH). This identifier should be used to conditionally apply patches or execute "work-arounds" identified as necessary with a particular version of the System Software.

3.2 ROM Organization and Services

3.2.1 Home ROM

3.2.1.1 Fixed Entry Points

Home ROM Location 0 is the entry to the system initialization code upon power-up (Ref. Figure 1.1-4). Locations 8 through 48 (8H through 30H) are the Z80 RESTART entry points for the following functions:

RESTART	FUNCTION
8	ERROR - Error exit from BASIC (Address on Stack points to Error Number)
16	WRCH - Write Character (Code in A) to Current Output Channel as established by SELECT (Address of output routine pointed to by System Variable CURCHL). (See Section 4.0).
24	IGN_SP - Return in A the current significant character in the Program Line (Address in System Variable CH_ADD) skipping over spaces and control characters except End-of-Line (ODH=ENTER)

32	NXT_IS - Like IGN_SP but returns in A the Next Significant Character.
40	CALCTR - Entry to Calculator Routines .
48	COPYUP - Make room for BC Bytes of temporary workspace just before address in System Variable STKBOT by copying up memory between there and the address in STKEND, adjusting affected pointers. Returns DE=1st Byte of Space; HL=Last.

Location 56 (38H) is the entry to service the hardware generated interruption which occurs approximately every 1/60 of a second (16.67 ms). Z80 Int. Mode 1 is used. This interruption is used to scan the keyboard (call to routine UPD_K - see Section 4.1.1). It is also used to update the Frame Counter (3 bytes pointed to by the System Variable FRAMES) used by the RANDOMIZE instruction.

Location 102 (66H) is the entry point for the NMI interruption, but this interruption is not used in the TS2068 design. (See Section 2.1.3.8 NMI Interruption.)

3.2.1.2 BASIC AROS Support

BASIC Application Cartridges are supported by special code in the Home ROM. A program line is copied from the cartridge to a buffer in the Home RAM (ARSBUF) and is then executed from there by the BASIC Interpreter. When a READ command is executed, the line containing the appropriate DATA statement is also copied from the cartridge to the RAM. The cartridge memory is enabled only for search and copy operations for both program lines and DATA statements, and when executing a USR function, otherwise the entire Home Bank is enabled while executing in the BASIC Interpreter. There is no support for User-Defined Functions which insert the expanded definition parameters directly into the program and then require search of the program area to find these parameters whenever a function is invoked.

See Section 5.1, Cartridge Software/Hardware, for additional details on BASIC AROS.

3.2.1.3 General

The balance of the Home ROM contains the BASIC Interpreter and standard I/O routines with the exception of the cassette I/O which is in the Extension ROM. The bit map table for the standard character set is located at the end of the Home ROM from location 15616 to 16383 (3D00H to 3FFFH). The address of this table minus 256 (100H) is contained in the System Variable CHARS (=3C00H).

The Home ROM routines accessible via the Function Dispatcher are described in Table 3.3.4-2. See Appendix A for the ROM Maps giving the ROM addresses of these routines.

3.2.2 Extension ROM

3.2.2.1 Fixed Entry Points

Extension ROM Location 0 contains code to pass control to the initialization code in the Home ROM. (Figure 1.1-4).

Extension ROM Location 56 (38H) is the interruption fielder. Control is passed to the System RAM code (See Section 3.3.3) to bank switch to the Home Bank and call the interruption service routines after which the state of the machine is restored and control returns to the interrupted process. Figure 3.2.2-1 shows the Extension ROM Interruption Fielder code.

3.2.2.2 General

The balance of the Extension ROM contains the following major components:

- Final Phase of System Initialization (See Figure 1.1-4)

- Cassette tape I/O (see Section 4.2)

- Change Video Mode Service

- OS RAM routines including the Function Dispatcher (copied to RAM at System Initialization) (see Section 3.3.3)

- Function Dispatcher Jump Table

FIGURE 3.2.2-1

Extension ROM Interruption Fielder

```
LOCATION      OBJECT CODE   SOURCE CODE            COMMENTS

0038          F5            PUSH  AF               Save AF
0039          F3            DI                     Disable Ints.
003A          3AC25C        LD    A,(VIDMOD)       Test Vidmod
003D          A7            AND   A
003E          00            NOP
003F          2804          JR    Z,CHK3           Vidmod=0
0041          F1            POP   AF               Restore AF
0042          C36EFA        JP    INT7             Chunk 7 if Vidmod not 0
0045          F1       CHK3 POP   AF               Restore AF
0046          C3AE62        JP    INT3             Chunk 3 if Vidmod = 0
```

3.2.2.3 Video Mode Change Service

The routine CHNG_VID takes as input a single byte in Register A which designates the desired video mode as shown in Table 3.2.2-1. All non-zero values involve access to the second display file located at 6000H-7AFFH. When the mode change requires remapping of the RAM (see Figure 1.1-3), the necessary relocation (BASIC program, machine stack, OS RAM code, UDG area, etc.) and modifications (system variables, RAM code internal addresses, stack pointer, etc.) are done by this service. The desired video mode is written to Port 0FFH, Bits 0-5, and the System Variable VIDMOD (5CC2H) is updated. The second display file is cleared to zeros on initial access (for Dual Screen Mode and High Resolution Graphics Mode, this results in a black screen since 0 yields attributes of black ink on black paper). If there is not enough free memory to do the necessary remapping, Error 4, Out of Memory is given.

Access to this service via the Function Dispatcher cannot be made consistently for various reasons. An Interface Routine is given in Section 3.2.2.4, to be executed from the Home RAM, which provides access to the Video Mode Change Service as well as other Extension ROM routines.

See Sections 4.1.2 and 5.2 for discussion of video screen support software. See Section 6.4 for details on known problems and corrections related to the Video Mode Change Service.

TABLE 3.2.2-1

INPUT TO VIDEO MODE CHANGE SERVICE

VALUE IN A	VIDEO MODE		DESCRIPTION
0	Normal		Primary Display File Only(Close 2nd Display File if Open)
128 (80H)	Dual Screen		Two Display Files Available. Primary Display File Active at Screen.
1	Dual Screen		Two Display Files Available. Second Display File Active at Screen
2	High Resolution Graphics		Primary Display File contains data for 256X192 pixels. Second Display File contains 6144 Attribute Bytes, each one controlling 8X1 pixels. NOTE 1.
	64-Column		The two display files are combined to provide a 64 column X 24 line screen. Even columns are derived from data in the Primary Display File and odd columns from the 2nd Display File. Bits 3-5 of the mode select the ink color which determines the complementary paper color. The Flash and Bright Attributes are fixed at 0; the Border is fixed at the paper color. NOTE 1.
	Ink	Paper	
6	Black	White	
14 (0EH)	Blue	Yellow	
22 (16H)	Red	Cyan	
30 (1EH)	Magenta	Green	
38 (26H)	Green	Magenta	
46 (2EH)	Cyan	Red	
54 (36H)	Yellow	Blue	
62 (3EH)	White	Black	

NOTE 1: The areas of memory normally used for Attribute Bytes are not accessed by the video hardware in this mode.

3.2.2.4 Extension ROM Interface Routine

The Extension ROM routines W_TAPE (Write from RAM to Tape), R-TAPE (Read from Tape to RAM) (see Section 4.2) and CHNG_VID (see Section 3.2.2.2) may be of interest to the machine code programmer. Because of a conflict with the use of the IX Register, the tape routines cannot be successfully accessed via the Function Dispatcher. Because the Change Video Mode Service may involve relocating the OS RAM routines (including the Function Dispatcher), and for other reasons, it also cannot be consistently accessed using the Function Dispatcher. Figure 3.2.2-2 gives a sample routine, to be executed from the Home RAM, which can be used to bank switch to the Extension ROM and call directly to the desired service. Appendix A contains an Extension ROM Map giving the addresses of these and other routines.

FIGURE 3.2.2-2

EXTENSION ROM INTERFACE ROUTINE

```
                        ;                                 ; EXTENSION ROM INTERFACE ROUTINE
       =00FC            R_TAPE          EQU        00FCH  ; READ TAPE ROUTINE
       =0068            W_TAPE          EQU        0068H  ; WRITE TAPE ROUTINE
       =0E8E            CHNG_VID        EQU        0E8EH  ; CHANGE VIDEO MODE ROUTINE
       =5CC2            VIDMOD          EQU        5CC2H  ; VIDEO MODE SYSTEM VARIABLE
                        ;
                        ;
                        ;                                 ; CALL READTP WITH REGISTERS SET
                        ;                                 ; UP FOR R_TAPE ROUTINE
                        ;
0000'  21 00FC          READTP  LD      HL,R_TAPE         ; ADDRESS TO HL
0003'  CD 002D'                 CALL    IFRTN             ; ENABLE EXT./EXECUTE RTN
0006'  18 17                    JR      EXIT              ; RESTORE HOME BANK AND RETURN
                        ;
                        ;                                 ; CALL WRITTP WITH REGISTERS SET
                        ;                                 ; UP FOR W_TAPE ROUTINE
                        ;
0008'  21 0068          WRITTP  LD      HL,W_TAPE         ; ADDRESS TO HL
000B'  CD 002D'                 CALL    IFRTN             ;
000E'  18 0F                    JR      EXIT
                        ;
                        ;                                 ; CALL CHGVID WITH DESIRED VIDEO
                        ;                                 ; MODE IN A
                        ;
0010'  21 0E8E          CHGVID  LD      HL,CHNG_VID       ; ADDRESS TO HL
0013'  F5                       PUSH    AF                ; SAVE VIDEO MODE
0014'  CD 002D'                 CALL    IFRTN
                        ;
                        ;                                 ; COMPENSATE FOR 'BUG' IN
                        ;                                 ; CHNG_VID RTN.WHICH SETS
                        ;                                 ; VIDMOD=0 INSTEAD OF 80
                        ;                                 ; WHEN BOTH DISPLAY FILES
                        ;                                 ; ARE OPEN
                        ;
                        ;
0017'  F1                       POP     AF                ; TEST VIDEO MODE
0018'  FE 80                    CP      80H               ; TEST IF 80
001A'  20 03                    JR      NZ,EXIT
001C'  32 5CC2                  LD      (VIDMOD),A        ; SET VIDMOD=80H
001F'  3A 002C'         EXIT    LD      A,(HSSAVE)        ; GET PREV. HOR.SEL.
0022'  D3 F4                    OUT     (0F4H),A          ; RESTORE
0024'  DB FF                    IN      A,(0FFH)          ; READ PORT FF
0026'  CB BF                    RES     7,A               ; TURN OFF ROM SEL.
0028'  D3 FF                    OUT     (0FFH),A
002A'  FB                       EI
002B'  C9                       RET
                        ;
002C'  00               HSSAVE  DEFB    0                 ; SAVE HOR.SEL. (PORT 0F4H)
                        ;
002D'  F3               IFRTN   DI                        ; MASK INTERRUPTIONS
002E'  F5                       PUSH    AF                ; PRESERVE REG. A
002F'  DB FF                    IN      A,(0FFH)          ; EXT.ROM SELECT BIT
0031'  CB FF                    SET     7,A               ; SEL. EXT.ROM
0033'  D3 FF                    OUT     (0FFH),A
0035'  DB F4                    IN      A,(0F4H)          ; HORIZONTAL SELECT FOR DOCK/EXT
0037'  32 002C'                 LD      (HSSAVE),A        ; SAVE
003A'  3E 01                    LD      A,1               ; SELECT CHUNK 0 IN EXT.ROM
003C'  D3 F4                    OUT     (0F4H),A          ;
003E'  F1                       POP     AF                ; RESTORE REG. A
003F'  E9                       JP      (HL)              ; EXECUTE TARGET ROUTINE AND
                        ;                                 ; RETURN TO CALLER OF IFRTN
                                END
```

3.3 RAM Organization and Services

3.3.1 System Variables

RAM beginning at 23552 (5C00H) is dedicated to the BASIC System Variables as defined in Appendix D of the TS 2068 User Manual and in Appendix B of this document. The area from the end of the defined variables (STRMNM - 23755 (5CCB)) to 24297 (5EE9H) is reserved for expansion of the System Variables, but is not used by the Operating System in the current TS 2068.

3.3.2 System Configuration Table

The area from 24298 (5EEAH) to 24575 (5FFFH) is reserved for the System Configuration Table (SYSCON). This table is built at system initialization time and is comprised of an 8 byte entry for AROS, a 4 byte entry for LROS, followed by eleven 24-byte entries for proposed expansion banks and an End-of-Table marker. In the original TS 2068 the actual usage of this table is limited to the 12 bytes for software cartridge identification (see Section 5.1 for details of the LROS and AROS Overhead Bytes).

3.3.3 Machine Stack

The TS 2068 reserves 512 (200H) bytes of RAM for the Machine Stack. The Machine Stack pointer is initialized to a value of 6200H (value also in System Variable MSTBOT); the pointer is decremented as items are pushed onto the stack (the pointer may also be modified directly by software). While the area reserved for the stack extends to 6000H, there is no actual check made to enforce this limit.

Note that the Machine Stack is located in the same memory area as the second display file. The CHNG_VID routine relocates the stack to the memory area from 0F7C0H to 0F8BFH, and modifies the Stack Pointer and MSTBOT (0F8C0H), as well as other affected system variables, when initializing the second display file. (See Section 3.2.2.3.)

3.3.4 OS RAM Routines

The code for the following Operating System functions is copied from the Extension ROM to Chunk 3 of the RAM at System initialization time. Since this is in the same memory area as the second display file, this code must be relocated, along with the machine stack, if the second display file is to be used. The CHNG_VID routine does the necessary relocation and modifications. (Section 3.2.2.3.)

Because this code is not in a fixed location, access to the OS RAM routines is conditional on the current video mode. The standard technique employed is to test the value in the System Variable VIDMOD at location 23746 (5CC2H). A zero indicates that the second display file is not in use and that the OS RAM routines are therefore in Chunk 3; any non-zero value indicates that the routines are in Chunk 7.

NOTE: This design implies that Chunks 2, 3 and 7 are always enabled in the Home Bank RAM whenever the System ROM and/or RAM routines are being used.

The OS RAM routines are contained in Module "Dispatch" which is included in Appendix A.

3.3.4.1 RAM Interruption Handler

Chunk 3 Entry: 62AEH

Chunk 7 Entry: FA6EH

The user must enter with bank status and Z80 registers intact, with address from point of interruption on the stack.

The RAM interruption handler saves state, including memory selection, enables the Home Bank, updates the Frame Counter, calls the keyboard scan routine in the Home ROM, restores state, and returns to the interrupted process.

The RAM Interruption handler is used whenever the interruption occurs while the Extension ROM is enabled. See Figure 3.2.2-1, Extension ROM Interruption Fielder. This same technique can be used for interruption processing in another bank, e.g. if an LROS wanted to use the standard system ROM keyboard scanning routines.

3.3.4.2 RAM Service Routines

Table 3.3.4-1 lists the RAM service routines which are designed to facilitate communication between memory banks. Those with Service Codes are accessible via the Function Dispatcher.

TABLE 3.3.4-1

OS RAM SERVICE ROUTINES

LABEL	SERVICE CODE	LOCATION		DESCRIPTION
	(Decimal)	CH.3	CH.7	
GET_WORD	-	6316	FAD6	Returns in HL the word from the address in HL in the bank specified in B.
PUT_WORD	-	633B	FAFB	Writes the word in DE to the address in HL in the bank specified in B.
GET_STATUS	14	6405	FBC5	Returns current memory selection (Horizontal Select byte - low active) in C for the bank specified in B. Preserves Bank # in B for Home, Ext. or Dock.
GET_CHUNK	-	644D	FC0D	Returns a single byte mask in A with all bits 0 except the one corresponding to the chunk for the address in HL.
GET_NUMBER	15	645E	FC1E	Returns in Reg. A the bank number currently controlling the address in HL.
BANK_ENABLE	-	6499	FC59	Enables the memory selected (Horizontal Select byte - low active) in the specified bank. (Bank # in B; Mem.Sel.in C)
GOTO_BANK	-	6572	FD32	Transfers control to the specified address after enabling the memory selected in the specified bank. Parameters passed on stack by pushing target address, then Bank #/Mem.Select prior to calling GOTO___BANK. (Return address is discarded.).
CALL_BANK	-	65D0	FD90	Like GOTO___BANK except saves current bank status, calls target address, and restores status prior to returning to user. Two additional parameters are passed on stack prior to doing call to CALL__BANK. These are PRM__OUT (16-bits) following by PRM_IN (16 bits) as described for the Function Dispatcher.

TABLE 3.3.4-1

OS RAM SERVICE ROUTINES
(continued)

LABEL	SERVICE CODE (Decimal)	LOCATION CH.3	LOCATION CH.7	DESCRIPTION
XFER_BYTES	-	6722	FEE2	Copies n byte(s) from specified source to specified destination in either ascending or descending order. Source and destination can be in the same or different banks and can be in shadowing chunks, but neither source nor destination can pass a "chunk" (8K) boundary since only the chunks containing the starting source and destination addresses are explicitly enabled. Parameters passed on stack by pushing: Source Bank/Dest.Bank Source Address Dest. Address Length 0/Direction: (0=Asscending -1=Descending)

NOTE: See Appendix A for listing of these routines. See Section 6.0 for known corrections to the routines.

3.3.4.3 Function Dispatcher

Chunk 3 Entry: 6200H

Chunk 7 Entry: F9C0H

The Function Dispatcher provides a common interface to a number of system routines via a Service Code and Jump Flag parameter passed on the machine stack. Table 3.3.4-2 lists the routines in Service Code order. Codes for routines that are known to not be successfully accessible via the Function Dispatcher have been deleted (marked Reserved). However, there is no guarantee that those on the list can be accessed without problems. Some ROM routines require data in a particular format, e.g. BASIC floating point number(s), both standard and special integer format, on the Calculator Stack which is located between (STKBOT) and (STKEND) (see Appendix C of the TS 2068 User Manual). An effort has been made to include information on register usage and functionality, but some of the ROM routines are so tightly tied to the BASIC Interpreter that they would require analysis which is beyond the scope of this document. These have been flagged with an Asterisk, but included in the list for documentation purposes only. Most of the routines which are directly implementing a BASIC command or function have two different action sequences based on the INTPT Flag (Bit 7 of FLAGS) which distinguishes syntax checking (Flag=0) from actual execution (Flag=1).

In order to use the Function Dispatcher, first set up any memory and stack (both machine and/or calculator) locations as if invoking the desired service directly. Then push the parameter(s) for the Dispatcher on the machine stack in the order outlined below. Finally, set up the registers as if invoking the desired service directly and call the Dispatcher based on its current location (Chunk 3 if VIDMOD=0 or Chunk 7 if VIDMOD has a non-zero value).

1. PRM_OUT 16 bits - Number of bytes of parameter data being passed on the stack to the specified Service (number of stack "pushes" * 2). Zero if no parameters being passed. E.g., to pass 4 bytes:

```
LD   HL,4
PUSH HL
```

This parameter is passed to the Dispatcher only if the Jump Flag (SVC_CODE) Bit 15) is not set. NOTE: This parameter refers to machine stack entries only, not to the Calculator Stack.

2. PRM_IN 16 bits - Number of bytes of parameter data to be passed back from the specified Service (number of stack "pushes" * 2). Zero if no parameters to be passed back.

This parameter is passed to the Dispatcher only if the Jump Flag (SVC_CODE Bit 15) is not set. NOTE: This parameter refers to machine stack entries only, not to the Calculator Stack.

3. SVC_CODE 16 bits - Bits 0-14 identify the Service to be invoked. Bit 15 (Jump Flag) is set if no return is desired (jump to Service rather than call). Bit 15 is zero if return is desired. E.g, to call K_SCAN using Service Code 136:

```
LD   HL,136      or      LD    HL,88H
PUSH HL                  PUSH  HL
```

TABLE 3.3.4-2

TS 2068 FUNCTION DISPATCHER SERVICES

SERVICE	SERVICE CODE	DESCRIPTION
	1 - 13 (1-0DH)	Reserved
GET_STATUS	14 (0EH)	Returns Memory Selection (Low Active) in C for Bank # in B
GET_NUMBER	15 (0FH)	Returns Bank # in A for Address in HL
	16-24 (10-18H)	Reserved
UPD_K	25 (19H)	Process Keyboard Input (See Section 4.1.1)
PARP	26 (1AH)	Generates DE+1 Cycles of a Tone having the Period 8N+236 to 8N+246 T-States. HL=N. (See 4.4)
BEEP	27 (1BH)	BEEP Command - processes parameters on Calculator Stack. Exits via PARP. (See 4.4)
K_DUMP	28 (1CH)	COPY Command. Dumps Primary Display File to Printer. (See 4.1.3)
SENDTV	29 (1DH)	Char.Output to Screen/Printer. Character Code in A. (See 4.1.2)
SETAT	30 (1EH)	Set Print Position to value in BC. B=Line No. (0-23); C=Column No. (0-31)
ATTBYT	31 (1FH)	Set Attribute Byte for Display File Adrs. in HL using ATTR_T, MASK_T and P_FLAG.
R_ATTS	32 (20H)	Permanent Attribute Info. to Temporary Attribute Variables
CLLHS	33 (21H)	Clear Lower Screen (Primary Display File)
CLS	34 (22H)	Clear Entire Screen(Primary Display File)
DUMPPR	35 (23H)	Print/Clear Print Buffer. (See 4.1.3)

TABLE 3.3.4-2

TS 2068 FUNCTION DISPATCHER SERVICES
(continued)

SERVICE	SERVICE CODE	DESCRIPTION
PRSCAN	36 (24H)	Send Scan (32 bytes) to Printer. Pixel Data Address in HL. Number of Scans remaining in B (=1-8). (See 4.1.3)
DESLUG	37 (25H)	Remove Number Slugs from Edit Line Buffer (Address in HL)
K_NEW	38 (26H)	NEW command. See Fig. 1.1-4
INIT	39 (27H)	Initialize: DE=Maximum RAM Address. A=0 for Power-On; = -1 (FFH) for NEW. (See Fig.1.1-4)
INCH	40 (28H)	Input Character to A from currently Selected Channel. Returns NC if no input.
SELECT	41 (29H)	Select Channel (Stream) - # in A. (See 4.1)
INSERT	42 (2AH)	Insert BC Bytes before byte whose address is in HL. Copies up all from HL to (STKEND) and updates affected system variables. Returns BC=0; DE=adrs.of last byte of inserted space; HL=adrs.of byte before first.
RESET	43 (2BH)	Reset Calculator Stack. Sets (STKEND) = (STKBOT) and (MEM)=MEMBOT (5C92H).
CLOSE	44 (2CH)	CLOSE # Command. Channel # on Calculator Stack.
CLCHAN	45 (2DH)	Close Channel. BC=Value from STRMS (Index into CHANS).
OPEN	46 (2EH)	OPEN # Command. Channel # and Device Spec. on Calculator Stack
OPCHAN	47 (2FH)	Open Channel. Device Spec. on Calculator Stack. DE=pointer into STRMS based on Ch.#. (See 4.1 for more info. on OPEN and CLOSE)

TABLE 3.3.4-2

TS 2068 FUNCTION DISPATCHER SERVICES
(continued)

SERVICE	SERVICE CODE	DESCRIPTION
CAT	48 (30H)	CAT Command (Not Applicable)
ERASE	49 (31H)	ERASE Command (Not Applicable)
FORMAT	50 (32H)	FORMAT Command (Not Applicable)
MOVE	51 (33H)	MOVE Command (Not Applicable)
FLASHA	52 (34H)	Flash Char.in A to Screen. (Calls SENDTV; assumes Lower Screen selected. Used to Flash Cursor.)
FIND_L	53 (35H)	Find BASIC Program Line with the number in HL. If Line found, returns Z and Address of Line in HL, else returns NZ and HL contains either address of line with next larger line number or points to the Variables area if there is no larger line number. Requested Line No. returned in BC and Address of Preceding Line in DE (DE=HL if no preceding line).
SUBLIN	54 (36H)	Finds either the D'th statement (D=Statement #; E=0) or 1st statement whose keyword token matches E (D=0), in a line pointed to by HL. If the D'th statement is found, returns Z and HL and (CH_ADD) both point to 1 byte before statement. (If line contains exactly D-1 statements, then the next line counts as the D'th.). If match on E is found, then returns NZ,NC and both HL and (CH_ADD) point to keyword. D is decremented by the number of statements looked at (e.g. D= -2 if two statements). If no match on E then returns NZ,C with both HL and (CH__ADD) pointing to End-of-Line byte (ODH).

TABLE 3.3.4-2

TS 2068 FUNCTION DISPATCHER SERVICES
(continued)

SERVICE	SERVICE CODE	DESCRIPTION
RECLEN	55 (37H)	Returns in BC the length of the record pointed to by HL. Sets DE to HL+BC. The record can be a program line, or a string or numeric variable or array.
DELREC	56 (38H)	Delete record pointed to by HL having length BC from Program or Variables memory. Updates affected system variables.
PUT_BC	57 (39H)	Converts number in BC from binary to ASCII and outputs to currently selected channel. If BC less than 0, outputs a 0.
SYNTAX	58 (3AH)	Check syntax of command or program line in Edit Line Buffer (E__LINE). ERR__NR= -1 if no errors, otherwise contains Error Number-1.
EXCUTE	59 (3BH)	Execute command(s) from Edit Line buffer.
FOR	60 (3CH)	FOR command. *
STOP	61 (3DH)	STOP command. Does RESTART 8 with Error No. 9.
NEXT	62 (3EH)	NEXT command. *
READ	63 (3FH	READ command. *
DATA	64 (40H)	DATA statement. *
RESTBC	65 (41H)	RESTORE command - Line No. in BC
RAND	66 (42H)	RANDomize command. Sets seed for Random Number Generator based on Parameter on Calculator Stack. If parameter is non-zero, value is loaded to SEED; if zero, value in FRAMES is loaded to SEED.

TABLE 3.3.3-2

TS 2068 FUNCTION DISPATCHER SERVICES
(continued)

SERVICE	SERVICE CODE	DESCRIPTION
CON'T	67 (43H)	CONT command. Loads values from OLDPPC and OSPPC to NEWPPC and NSPPC and returns. Inside the BASIC Interpreter, this results in executing from Line No. in NEWPPC, Statement No. in NSPPC.
JUMP	68 (44H)	Jump to Line - Loads Line Number from Calculator Stack to NEWPPC and sets NSPPC to 0 and returns.
FIX_U1	69 (45H)	Converts Floating Point number on Calculator Stack to a single byte unsigned binary value in A (uses FP2A). Does RESTART 8 for Error B if number out of range.
FIX_U	70 (46H)	Converts Floating Point number on Calculator Stack to a 2-byte unsigned binary value in BC (uses FP2BC). Error B if number out of range.
CLEAR	71 (47H)	CLEAR command. Processes parameter on Calculator Stack to value in BC for CLR_BC.
CLR_BC	72 (48H)	Value in BC is new RAMTOP. Deletes Variables, clears screen, and Calculator Stack, etc.
GO_SUB	73 (49H)	GO_SUB command. Inserts a 3-byte GO__SUB Block into the machine stack above the 2 most recent entries. The Block consists of current Line No. (2 bytes) and Statement No. (1 byte) to be used when RETURN is executed. Then calls JUMP to process GO__SUB parameter and returns. At return to caller, machine stack consists of top of stack at point GO_SUB was called, followed by 3-byte entry (Line No. MSB/Line No. LSB/Statement No.).

TABLE 3.3.3-2

TS 2068 FUNCTION DISPATCHER SERVICES
(continued)

SERVICE	SERVICE CODE	DESCRIPTION
CHK_SZ	74 (4AH)	Checks if room for BC + 80 (50H) bytes between (STKEND) and (RAMTOP). Addition of 80 bytes is "left-over" from Spectrum to guarantee minimum machine stack where the stack was at the top of RAM. Error 4 if not enough room.
RETURN	75 (4BH)	RETURN command. Retrieves most recent GO_SUB Block from Machine Stack (SP+4), loads data to NEWPPC and NSPPC and returns. Error 7 if MSB Line No.=3EH (End of Stack Marker).
PAUSE	76 (4CH)	PAUSE command. Processes parameter on Calculator Stack to BC then waits BC frames or until key is depressed. (Uses HALT instruction, so interruptions must be enabled.)
BREAK?	77 (4DH)	Reads BREAK key. Returns NC if it is pressed and ON ERROR is not active.
DEF	78 (4EH)	Define Function.*
K_LPR	79 (4FH)	LPRINT - Selects Channel 3 and processes items in LPRINT statement for output via WRCH.
K_PRIN	80 (50H)	PRINT - Selects Channel 2 and processes items in PRINT statement for output via WRCH (same code used for K_LPR).
P_SEQ	81 (51H)	Code used by K_LPR and K_PRIN to process output data and controls in BASIC statement (address in CH ADD).
INPUT	82 (52H)	INPUT command. Selects Channel 1 and processes I/O for Keyboard/Lower Screen using a buffer at (WORKSP) for input. *

TABLE 3.3.3-2

TS 2068 FUNCTION DISPATCHER SERVICES
(continued)

SERVICE	SERVICE CODE	DESCRIPTION
I_SEQ	83 (53H)	Code used by INPUT to process input items and controls in BASIC statement (address in CH_ADD).
NOTKB?	84 (54H)	Returns Z if current channel is Keyboard/Lower Screen (device specification="K").
COLOR	85 (55H)	Adjusts system variables ATTR_T, MASK_T and P_FLAG for color code in D (0-9). Enter with C set to set Ink or NC set to set Paper. Error K if D is invalid.
HIFLSH	86 (56H)	Adjusts system variables (ATTR_T and MASK_T) for Flash/Bright code in D (0, 1 or 8) else Error K. Enter with C for Flash or NC for Bright.
SCRMBL	87 (57H)	Returns in HL the primary display file address for the pixel with coordinates in BC (B=Y;C=X). Returns in A the bit no (0-7) where 0=lefthand or most significant bit. Error B if Y is greater than 175.
PLOT	88 (58H)	PLOT command. Processes X/Y parameters on the Calculator Stack to BC for plotting of pixel via PLOTBC.
PLOTBC	89 (59H)	Deals with pixel for coordinates in BC (B=Y; C=X). Processes using P_FLAG for Inverse and Over attributes. Updates Attribute File and sets COORDS=BC.
GET_XY	90 (5AH)	Converts a pair of numbers from the Calculator Stack to 2 single byte numbers. Top number goes to B and second to C. D=sign of B and E=sign of C (+1 or -1). Used by PLOT and other routines.

TABLE 3.3.3-2

TS 2068 FUNCTION DISPATCHER SERVICES
(continued)

SERVICE	SERVICE CODE	DESCRIPTION
CIRCLE	91 (5BH)	CIRCLE command. Calculates successive plot positions from the parameters in the BASIC statement. *
DRAW	92 (5CH)	DRAW command. Calculates successive plot positions from the parameters in the BASIC statement. *
DRAW_L	93 (5DH)	Plots a straight line from current position (COORDS) based on parameters from Calculator Stack (X,Y). *
EXPRN	94 (5EH)	Evaluates expression in BASIC program line (CH__ADD), putting value on Calculator Stack. *
F_SCRN	95 (5FH)	SCREEN$ function. Matches screen line/col. position (parameters on Calculator Stack) against standard ASCII character set. Returns BC=0 if no find. BC=1 and DE points to Char. Code byte if match found.
F_ATTR	96 (60H)	ATTR function. Returns attribute byte value controlling screen pixel position based on parameters on Calculator Stack (X,Y).
RND	97 (61H(	RND function. Uses value in SEED to generate a pseudo-random number which is placed on the Calculator Stack (Floating Point number).
F_PI	98 (62H)	PI function. Places value of PI on Calculator Stack.

TABLE 3.3.3-2

TS 2068 FUNCTION DISPATCHER SERVICES
(continued)

SERVICE	SERVICE CODE	DESCRIPTION
F_INKY	99 (63H)	INKEY$ function. Scans keyboard and puts character code byte in (WORKSP) if key detected. In any case, pushes Regs. AEDCB onto Calculator Stack - BC=0 if no input; =1 if char. code stored; DE=address of char. code byte.
FIND_N	100 (64H)	Find Variable. Searches Variables area for match against identifier pointed to by CH_ADD. Adjusts bit NO of FLAGS (Bit 6) for type (1=numeric; 0=string). Also used to find formal parameters for User Defined Functions. *
PSHSTR	101 (65H)	Push String - Clears bit NO of FLAGS and pushes Regs. AEDCB onto Calculator Stack adjusting (STKNXT) upwards. DE contains address of string; BC contains length.
PAEDCB	102 (66H)	Same code as for PSHSTR but preserves state of bit NO of FLAGS (Bit 6).
LET	103 (67H)	LET command. Processes existing or creates new variables. *
POPSTR	104 (68H)	Pop String - Pops end of Calculator Stack ((STKNXT)-1 through (STKNXT)-5) to Regs. BCDEA, adjusting (STKNXT) downwards.
DIM	105 (69H)	DIM statement. Creates or initializes numeric or string arrays. *
STKUSN	106 (6AH)	Stack Unsigned Number - inputs a floating point number onto the Calculator Stack from a series of ASCII characters addressed by (CH_ADD). The first character is already in Reg. A (either decimal point, binary token or digit).

TABLE 3.3.3-2

TS 2068 FUNCTION DISPATCHER SERVICES
(continued)

SERVICE	SERVICE CODE	DESCRIPTION
STK_A	107 (6BH)	1-byte unsigned integer in A to top of Calculator Stack (binary to floating point). Loads 0 to B and A to C, then executes STK_BC.
STK_BC	108 (6CH)	2-byte unsigned integer in BC to top of Calculator Stack (binary to floating point).
ININT	109 (6DH)	Converts a series of ASCII digits pointed to by (CH_ADD) into an unsigned floating point integer on the Calculator Stack. First character is in A on entry. Terminates when non-digit found.
FP2BC	110 (6EH)	Pops top of Calculator Stack (floating point number) and puts in BC, rounded to nearest integer. Returns NZ if value is negative. Returns C if number exceeded maximum 2-byte value (65535). Range: -65535 to +65535.
FP2A	111 (6FH)	Pops top of Calculator Stack (floating point number) and puts in A, rounded to nearest integer. Returns NZ if value is negative. Returns C if number exceeded maximum 1-byte value (255). Range: -255 to +255.
OUTPUT	112 (70H)	Outputs number on top of Calculator Stack to currently selected channel via WRCH. (Converts from floating point to ASCII.)

Full explanation of the following Calculator Routines is beyond the scope of this document.

SUB	113 (71H)	Subtract floating point format numbers (HL) minus (DE). (DE) assumed to be (HL) + 5.

TABLE 3.3.3-2

TS 2068 FUNCTION DISPATCHER SERVICES
(continued)

SERVICE	SERVICE CODE	DESCRIPTION
ADD	114 (72H)	Add (HL) + (DE). See SUB.
MULT	115 (73H)	Integer multiply HL * DE. Returns C if overflow.
TIMES	116 (74H)	Floating Point Multiply (HL) * (DE).
DIVIDE	117 (75H)	Floating Point Divide (HL)/(DE).
TRUNC	118 (76H)	Truncates a floating point number (HL) towards zero to an integer. Assumes (DE) = (HL) + 5.
FLOAT	119 (77H)	Converts number (HL) to floating point format. Assumes HL points to an integer in 5-byte format.
INTDIV	120 (78H)	Replaces top two numbers on Calculator Stack (X and Y) by X Mod Y and the integer quotient INT (X/Y). Returns with DE and HL = Calc.Stack Pointers.
INT	121 (79H)	Replaces the top of the Calculator Stack by its integer part. Returns with HL = top of Calc. Stack and DE = next free space.
EXP	122 (7AH)	Replaces the top of the Calculator Stack, X, by EXP(X). Returns with DE and HL = Calc.Stack Pointers.
LN	123 (7BH)	Replaces the top of the Calculator Stack by its natrual logarithm. Returns DE and HL = Calc.Stack Pointers.
ANGLE	124 (7CH)	Replaces the top of the Calculator Stack (X) by Y where Y is greater than or equal to -1 and less than or equal to +1 and the SIN X = SIN (PI/2 * Y).

TABLE 3.3.3-2

TS 2068 FUNCTION DISPATCHER SERVICES (continued)

SERVICE	SERVICE CODE	DESCRIPTION
COS	125 (7DH)	Replaces the top of the Calculator Stack by its COSINE.
SIN	126 (7EH)	Replaces the top of the Calculator Stack by its SINE.
TAN	127 (7FH)	Replaces the top of the Calculator Stack by its TANGENT.
ATN	128 (80H)	Replaces the top of the Calculator Stack by its inverse TANGENT.
ASN	129 (81H)	Replaces the top of the Calculator Stack by its inverse SINE.
ACS	130 (82H)	Replaces the top of the Calculator Stack by its inverse COSINE.
ROOT	131 (83H)	Replaces the top of the Calculator Stack by its Square Root.
TO_THE	132 (84H)	Replaces the top two numbers on the Calculator Stack (X, Y) by X**Y.
RDCH	133 (85H)	Wait for character from currently selected channel (calls INCH). Returns character code in A. See 4.1.1.
SENDCH	134 (86H)	Write character whose code is in A to currently selected output channel. See 4.1.2.
WRCH	135 (87H)	See 3.2.1.1, RESTART 16.
K_SCAN	136 (88H)	Keyboard Scan. See 4.1.1

TABLE 3.3.3-2

TS 2068 FUNCTION DISPATCHER SERVICES
(continued)

SERVICE	SERVICE CODE	DESCRIPTION
P_LFT	137 (89H)	Backspace. Sets current column position back 1 for selected device. (System Variable updated is S_POSN, SPOSNL, or P_POSN for Screen, Lower Screen or Printer respectively.)
P_RT	138 (8AH)	Outputs a space to currently selected device.
P_NL	139 (8BH)	End-of-Line. Sets current position to start of next line if screen, or outputs printer buffer if printer.
PUTMES	140 (8CH)	Output message to currently selected device. DE points to base of message table which contains variable length ASCII coded messages. The first byte of the table and the last byte of each message must have the most significant bit set. Register A contains the message number, numbered from 0 upwards.
K_CLS	141 (8DH)	CLS command. Executes both CLS and CLLHS.
SCRL	142 (8EH)	Scrolls entire screen (primary display file) up 1 line.
F_PNT	143 (8FH)	POINT function. Processes X,Y parameters from Calculator Stack to BC. Returns unsigned integer value = 0 or 1 on Calculator Stack reflecting state of pixel at coordinates X/Y.
DRAWLN	144 (90H)	Same as DRAW_L but enter with BC register containing coordinates, B=Y and C=X.
PUT_LN	145 (91H)	Output Line Number as 4 digits, right aligned and space filled to currently selected output channel. HL points to MSB of 2-byte Line Number.

4.0 SYSTEM I/O GUIDE

4.1 I/O Channels

The TS 2068 software architecture supports up to 19 I/O Channels or "Streams", numbered from -3 through 15. Those numbered less than 0 are "hidden" or reserved for system use; Channels 0 through 15 are available for assignment via the OPEN # command which has the following format:

```
OPEN # n,s
```

where n is the Channel number (0-15) and s is the Device Specification, e.g. "K" (keyboard), "S" (screen) or "P" (printer).

Channels 0 through 3 are initialized at power-on or execution of a NEW command to support the standard system devices and character I/O functions as shown in Figure 4.1-1. Channels 4-15 are considered "Closed". You can re-assign the standard I/O, e.g. OPEN # 2,"P" will direct all PRINT and LIST commands to the 2040 Printer instead of the screen. You can also assign Channels 4-15 and then direct I/O by including the Channel number (or a variable equated to the channel number) in the I/O statement, e.g. PRINT # n. Support for other than the standard system devices described above is not implemented in the original version of the TS 2068 and attempts to OPEN Channels or "Streams" using other than the standard device specifications ("K", "S" or "P") will result in an error message. One possibility for adding BASIC support for new devices is to intercept the I/O error on OPEN and other commands such as CAT and FORMAT via ON ERR and interpret the BASIC program line using your own machine code routines.

	Channel/ Stream #	Device Specification	Command/Function
RESERVED	-3	"K"	Keyboard/Lower Screen
	-2	"S"	Main Screen
	-1	"R"	RAM Write (not used)
	0	"K"	Output to Lower Screen
	1	"K"	INPUT command
	2	"S"	PRINT/LIST commands
	3	"P"	LPRINT/LLIST commands

FIGURE 4.1-1

The Channel architecture is implemented by a number of tables located in both ROM and RAM.

A. STRMS STRMS is a 38 byte table (2 bytes for each of the 19 channels) located in the System Variables area beginning at 23568 (5C10H). It is initialized at power-on or NEW to the following values:

LOCATION	VALUE	
5C10	0100 (Channel -3)	(Copied from SMINIT in module EDIT of the Home ROM)
5C12	0600 (Channel -2)	
5C14	0B00 (Channel -1)	
5C16	0100 (Channel 0)	
5C18	0100 (Channel 1)	
5C1A	0600 (Channel 2)	
5C1C	1000 (Channel 3)	
5C1E	0000 (Channel 4)	
.	. .	
.	. .	
5C34	0000 (Channel 15)	

This table is accessed using ((Ch.# * 2) + 16H) as an index added to 5C00H. The 2-byte value in the table is an index into the CHANS area of memory which contains the addresses of the I/O routines for the selected channel. If the 2-byte value is zero, the Channel is closed. The STRMS table is modified via the OPEN # and CLOSE # commands. When a Channel is OPENed, the device specification is used to obtain the 2-byte value to be inserted. This value is taken from the table STRMINIT in module EDIT of the Home ROM. When Channels 0 through 3 are CLOSEed, the values are restored to those used at power-on time. All others are cleared to zero.

B. CHANS The CHANS System Variable at 23631 (5C4FH) contains the address of a 21-byte table initialized at power-on or execution of a NEW command to support "stream" I/O to the four standard system devices ("K", "S", "R" and "P"). Each table entry is 5 bytes long and is indexed by the value obtained from the STRMS table added to (CHANS)-1. Each entry has the following format:

Output Routine Address	2 Bytes
Input Routine Address	2 Bytes
Device Specification	1 Byte

This table is copied from CHINIT in module EDIT of the Home ROM. The last byte of the table contains an 80H which will immediately precede the first line of the BASIC Program (PROG).

Whenever an I/O operation is performed, the appropriate Channel is "selected", i.e. its number is used as an index into STRMS to obtain the offset into the CHANS table. This offset is added to

(CHANS)-1 and the resultant pointer is loaded into the System Variable CURCHL for use by the next character I/O operation (WRCH/RDCH). The device specification from CHANS is used to find and execute the initilization routine in SELTAB.

C. SELTAB The Select Table is located in the EDIT module of the Home ROM and contains offsets to device dependent initialization routines for the standard devices "K", "S" and "P".

D. SPEC_T The Specification Table is located in the CHANS module of the Home ROM and contains offsets to device dependent OPEN routines for the standard devices "K", "S" and "P". It is accessed whenever an OPEN # is executed.

E. CL_TAB The Close Table is located in the CHANS module of the Home ROM and contains offsets to device dependent CLOSE routines for the standard system devices "K", "S" and "P". It is accessed whenever a CLOSE # is executed.

The following sections describe the standard system I/O devices supported via Channel I/O.

4.1.1 Keyboard

The low-level routines supporting keyboard input are executed every 1/60 of a second out of the Interruption Handler (Location 56 (38H)). The controlling routine is labelled UPD_K. This routine calls K_SCAN to determine if any key(s) are currently being depressed, controls the debouncing and repeat algorithms, calls K_BASE to determine the Base Code, calls CHCODE to translate the Base Code based on Mode (e.g. "K", "G" or "E" Mode), and finally, stores the resultant keystroke code in LAST_K and sets the flag KEYHIT. Figure 4.1.1-1 illustrates the mode control variable and associated flags and Figure 4.1.1-2 contains flowcharts of the keyboard support routines.

The character input routine associated with Device Spec. "K" is labeled IN_K. The entry address is obtained using the pointer in CURCHL when Channel 1 has been Selected and the Character I/O Input routines RDCH/INCH are executed. The IN_K routine tests the KEYHIT flag to detect the presence of input from the keyboard. When the KEYHIT flag=1, the contents of LAST_K are returned to the requestor.

FIGURE 4.1.1-1

TS 2068 MODE CONTROLS

System Variable	Location	Description
		Value
MODE	23617(5C41H)	0 = "K" or "L" Mode 1 = "E" Mode 2 = "G" Mode
FLAGS	23611(5C3BH)	If MODE = 0 then: Bit 3 = 0 for "K" Mode = 1 for "L" Mode
FLAGS2	23658(5C6AH)	If in "L" Mode then: Bit 3 = 0 CAPS Lock Off = 1 CAPS Lock On

UPDATE KEYBOARD STATE
(Called once every 1/60th of a second)

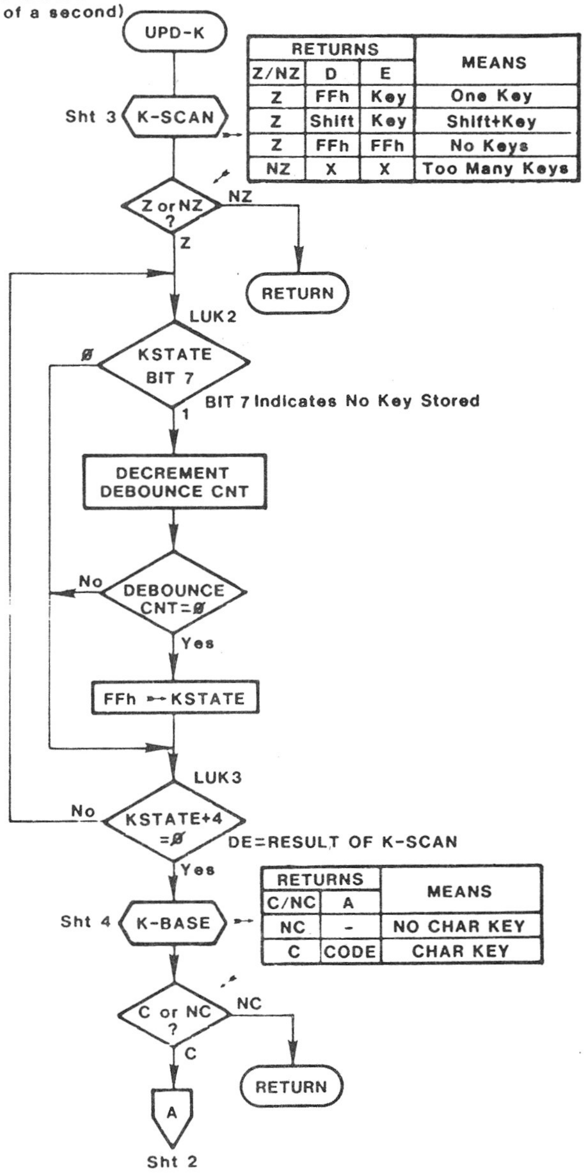
UPD-K
Sht 3
K-SCAN
Z or NZ ?
NZ
Z
RETURN
LUK2
0
KSTATE BIT 7
BIT 7 Indicates No Key Stored
1
DECREMENT DEBOUNCE CNT
No
DEBOUNCE CNT=0
Yes
FFh → KSTATE
LUK3
No
KSTATE+4 =0
DE=RESULT OF K-SCAN
Yes
Sht 4
K-BASE
C or NC ?
NC
C
RETURN
A
Sht 2

RETURNS			MEANS
Z/NZ	D	E	
Z	FFh	Key	One Key
Z	Shift	Key	Shift+Key
Z	FFh	FFh	No Keys
NZ	X	X	Too Many Keys

RETURNS		MEANS
C/NC	A	
NC	-	NO CHAR KEY
C	CODE	CHAR KEY

ADDRESS	LABEL	USE
5C00	KSTATE	DEBOUNCE CNT 0
5C01		REPEAT CNT 0
5C02		CHARACTER 0
5C03		
5C04	KSTATE+4	
5C05		DEBOUNCE CNT 1
5C06		REPEAT CNT 1
5C07		CHARACTER 1
5C08		
5C09		REPDEL
5C0A	REPPER	INITIAL DEBOUNCE CNT=5

Figure 4.1.1-2. KEYBOARD ROUTINES, FLOWCHARTS

Sht 2 of 5

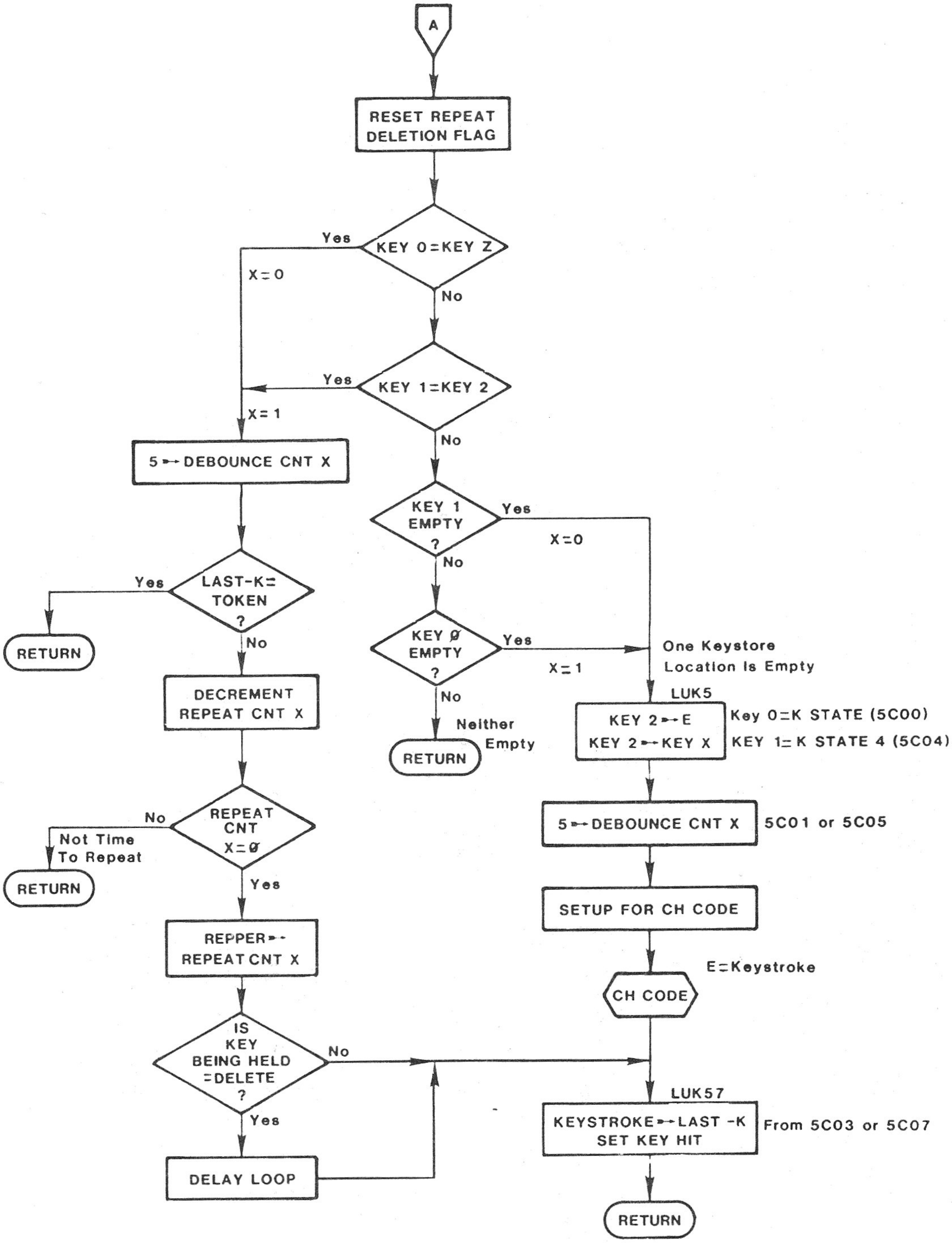
A
RESET REPEAT DELETION FLAG
KEY 0=KEY Z
Yes
X=0
No
KEY 1=KEY 2
Yes
X=1
No
5 ➝ DEBOUNCE CNT X
LAST-K= TOKEN ?
Yes
RETURN
No
DECREMENT REPEAT CNT X
REPEAT CNT X=0
No
Not Time To Repeat
RETURN
Yes
REPPER ➝ REPEAT CNT X
IS KEY BEING HELD =DELETE ?
No
Yes
DELAY LOOP
KEY 1 EMPTY ?
Yes
X=0
No
KEY 0 EMPTY ?
Yes
X=1
No
Neither Empty
RETURN
One Keystore Location Is Empty
LUK5
KEY 2 ➝ E
KEY 2 ➝ KEY X
Key 0=K STATE (5C00)
KEY 1= K STATE 4 (5C04)
5 ➝ DEBOUNCE CNT X
5C01 or 5C05
SETUP FOR CH CODE
E=Keystroke
CH CODE
LUK57
KEYSTROKE ➝ LAST -K
SET KEY HIT
From 5C03 or 5C07
RETURN

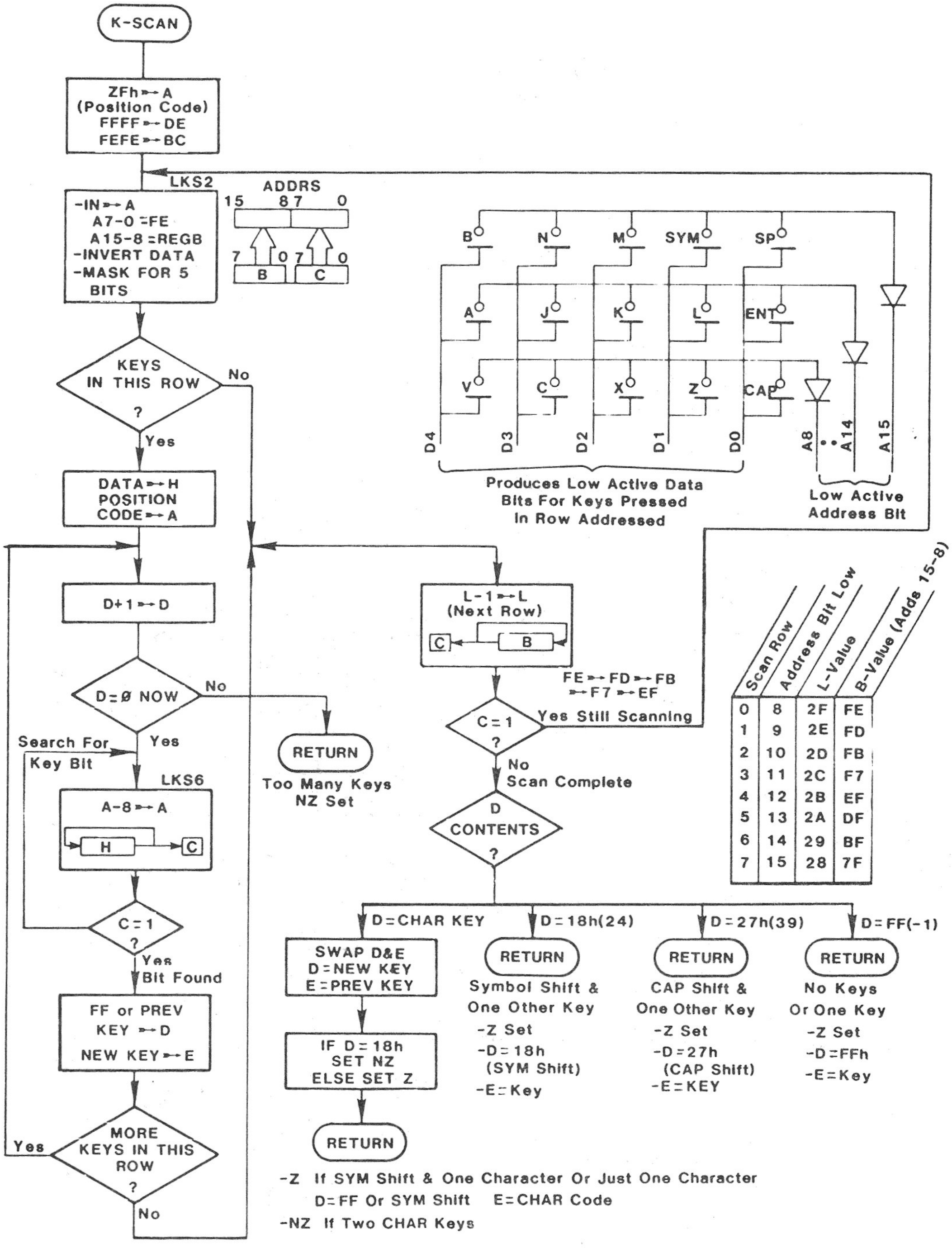
K-SCAN
ZFh ➞ A
(Position Code)
FFFF ➞ DE
FEFE ➞ BC
LKS2
-IN ➞ A
A7-0 = FE
A15-8 = REGB
-INVERT DATA
-MASK FOR 5 BITS
ADDRS
15
8 7
0
7
0 7
0
B
C
KEYS IN THIS ROW ?
No
Yes
DATA ➞ H
POSITION CODE ➞ A
D+1 ➞ D
D = 0 NOW
No
Yes
RETURN
Too Many Keys
NZ Set
Search For Key Bit
LKS6
A-8 ➞ A
H
C
C = 1 ?
Yes
Bit Found
FF or PREV KEY ➞ D
NEW KEY ➞ E
MORE KEYS IN THIS ROW ?
Yes
No
B
N
M
SYM
SP
A
J
K
L
ENT
V
C
X
Z
CAP
D4
D3
D2
D1
D0
A8
A14
A15
Produces Low Active Data Bits For Keys Pressed In Row Addressed
Low Active Address Bit
L-1 ➞ L
(Next Row)
C
B
FE ➞ FD ➞ FB ➞ F7 ➞ EF
C = 1 ?
Yes Still Scanning
No
Scan Complete
D CONTENTS ?
D = CHAR KEY
D = 18h(24)
D = 27h(39)
D = FF(-1)
SWAP D&E
D = NEW KEY
E = PREV KEY
IF D = 18h SET NZ ELSE SET Z
RETURN
RETURN
Symbol Shift & One Other Key
-Z Set
-D = 18h (SYM Shift)
-E = Key
RETURN
CAP Shift & One Other Key
-Z Set
-D = 27h (CAP Shift)
-E = KEY
RETURN
No Keys Or One Key
-Z Set
-D = FFh
-E = Key
-Z If SYM Shift & One Character Or Just One Character
D = FF Or SYM Shift E = CHAR Code
-NZ If Two CHAR Keys

Scan Row	Address Bit Low	L-Value	B-Value (Adds 15-8)
0	8	2F	FE
1	9	2E	FD
2	10	2D	FB
3	11	2C	F7
4	12	2B	EF
5	13	2A	DF
6	14	29	BF
7	15	28	7F

K-BASE: Find BASE Code For Key

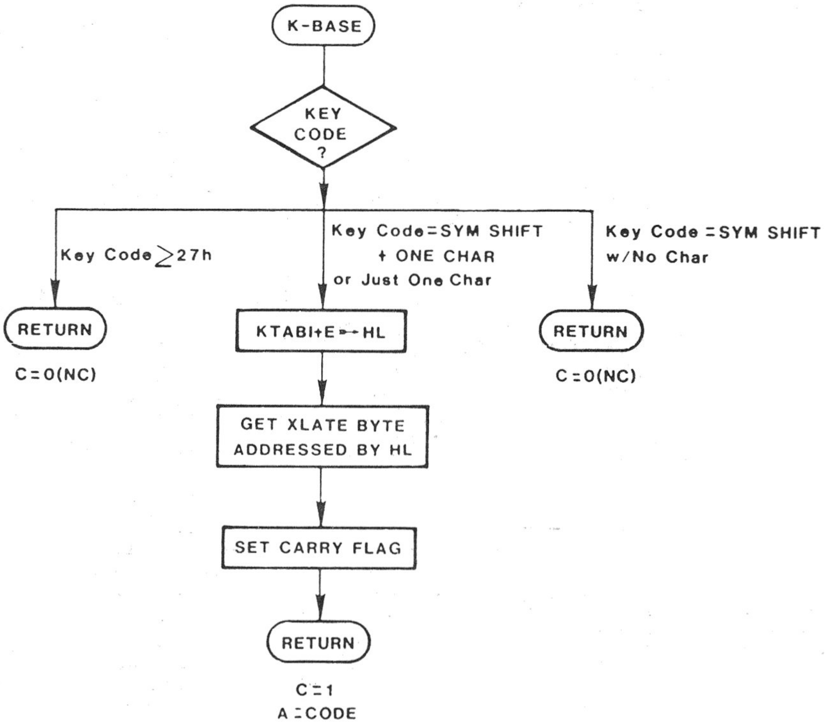
K-BASE
KEY CODE ?
Key Code ≥ 27h
Key Code = SYM SHIFT + ONE CHAR or Just One Char
Key Code = SYM SHIFT w/No Char
RETURN
C = 0(NC)
KTABI+E → HL
RETURN
C = 0(NC)
GET XLATE BYTE ADDRESSED BY HL
SET CARRY FLAG
RETURN
C = 1
A = CODE

Sht 5 of 5

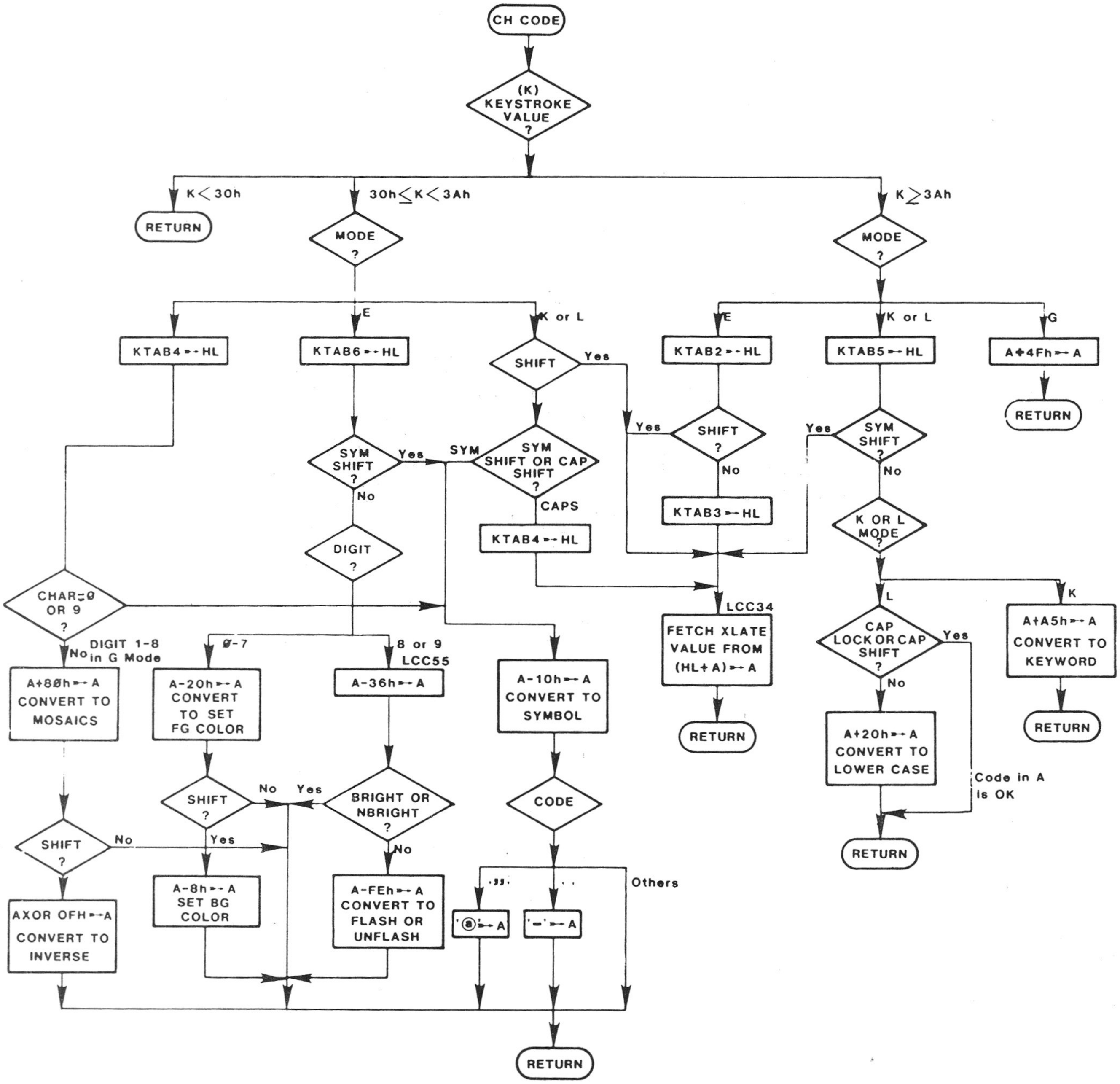
CH CODE
(K) KEYSTROKE VALUE ?
K < 30h
30h ≤ K < 3Ah
K ≥ 3Ah
RETURN
MODE ?
MODE ?
E
K or L
E
K or L
G
KTAB4 ⟶ HL
KTAB6 ⟶ HL
SHIFT
Yes
KTAB2 ⟶ HL
KTAB5 ⟶ HL
A+4Fh ⟶ A
RETURN
Yes
SHIFT ?
Yes
SYM SHIFT ?
SYM SHIFT ?
Yes
SYM
SYM SHIFT OR CAP SHIFT ?
No
No
No
CAPS
KTAB3 ⟶ HL
DIGIT ?
KTAB4 ⟶ HL
K OR L MODE ?
CHAR=0 OR 9 ?
LCC34
L
K
No
DIGIT 1-8 in G Mode
0-7
8 or 9 LCC55
FETCH XLATE VALUE FROM (HL+A) ⟶ A
CAP LOCK OR CAP SHIFT ?
Yes
A+A5h ⟶ A CONVERT TO KEYWORD
A+80h ⟶ A CONVERT TO MOSAICS
A-20h ⟶ A CONVERT TO SET FG COLOR
A-36h ⟶ A
A-10h ⟶ A CONVERT TO SYMBOL
No
RETURN
RETURN
A+20h ⟶ A CONVERT TO LOWER CASE
Code in A Is OK
SHIFT ?
No
Yes
BRIGHT OR NBRIGHT ?
CODE
RETURN
SHIFT ?
No
Yes
No
'"'
':'
Others
AXOR 0FH ⟶ A CONVERT TO INVERSE
A-8h ⟶ A SET BG COLOR
A-FEh ⟶ A CONVERT TO FLASH OR UNFLASH
'@' ⟶ A
'–' ⟶ A
RETURN

4.1.2 Video Screen

The TS 2068 system software supports I/O in the primary display file only. See Section 2.1.10 for the display file organization. The screen, which is 32 columns X 24 lines, is partitioned into two parts, the main or upper screen (22 lines) and the lower screen (2 lines). The lower portion of the screen is used for output of system messages and to echo input from the keyboard of BASIC commands, BASIC program lines, or data. The lower screen expands as needed for multi-line input, scrolling the entire screen upwards. The variable DF_SZ reflects the number of lines in the lower screen (default=2).

Character output to the screen is done using the Channel I/O described in Section 4.1 using device specification "K" for the lower screen and "S" for the upper screen. Each character is defined by an 8 X 8 group of pixels. The 8 bytes needed for each of the 133 characters supported by the TS 2068 are located as shown in Figure 4.1.2-1. Note that by constructing your own pixel data and placing (base address-100H) into CHARS, you can define your own character set.

Associated with each character position is an Attribute Byte controlling the background (PAPER) color, the foreground (INK) color, the intensity (BRIGHT), and whether the position is constant or alternates between true and inverse video (FLASH). Two other "attributes", OVER and INVERSE, are implemented by software at the time the character(s) are placed into the display file.

FIGURE 4.1.2-1

TS 2068 STANDARD CHARACTER TABLES

Character Set	No.of Chars.	Char.Codes	Location
Standard	96	32-127 (20-7FH)	Home ROM (3D00-3FFFH) (Address-100H in CHARS)
Std.Graphics	16	128-143 (80-8FH)	Dynamically Generated by Software
User Defined Graphics	21	144-164 (90-A4H)	Home RAM (Address in UDG)

The screen output routine, SENDTV, is in Module IO_1 of the Home ROM. This routine is used for output to both the screen (upper and lower) and the dot matrix printer. The following sequence illustrates the major operations involved in executing a PRINT "A" statement:

1. Channel 2 is Selected (normal assignment assumed)

- loads CURCHL with pointer into CHANS area for Channel 2 (first 2 bytes are address of Output Routine - SENDTV).

- clears printer and lower screen flags

- sets ATTR_T to values based on ATTR_P (current "permanent" attribute values are transferred to the system variable used by the screen output routine). If the PRINT statement contained temporary attribute controls, they would override the settings established via Select.

2. The character code for "A" (65/41H) is placed in Register A and a RESTART 16 (10H) is executed (WRCH). This jumps to SENDCH in module EDIT of the Home ROM which passes control to the SENDTV routine based on (CURCHL).

3. The registers are loaded from the System Variables with the current Row/Column position (S_POSN) and Display File address (DF_CC) for the main screen.

4. The character code is determined to be from the standard character set so the registers are loaded with the address from CHARS and the offset to the pixel pattern for "A" is calculated using the character code X 8 (shift left 3 places).

5. The first pixel row (8X1) from the character table is copied to the display file. The character table address is incremented by 1 and the display file address is incremented by 256 (100H). The next pixel row (8X1) is copied to the display file. This process is repeated until the 8 pixel rows have been copied. Masking of the data going into the display file is done based on the flags from P_FLAG thus controlling the OVER and INVERSE attributes.

6. The attribute byte controlling the character position just written is updated based on the value in ATTR_T and other flags.

7. The variables S_POSN and DF_CC are updated to reflect the next screen position and return is made from the WRCH operation.

In the above sequence, if the print position for the "A" had started a new line following the 22 lines of the main screen, the SCROLL? prompt would have been outputted to the lower screen and, assuming a positive response, the upper screen would be scrolled up 1 line, a blank line inserted at the bottom of the upper screen, and the "A" printed at the start of the new line.

Graphics I/O using pixel coordinates is supported in the primary display file by the PLOT, DRAW and CIRCLE commands. The Home ROM module GRAPHS contains the major routines which implement these commands. They are limited to the 22 lines of the upper screen (256 X 176 pixels).

Figure 4.1.2-2 shows the internal representation used to designate row (line) and column positions. See Section 2.1.10 for details on the organization of the Display Pixel and Attribute Files. See Section 5.2 for details on software support necessary for the advanced video modes.

FIGURE 4.1.2-2

DISPLAY FILE ROW/COLUMN NOTATION

BASIC Parameters	Internal Representation	
Line/Row 0	24 (18H)	
1	23 (17H)	
.	.	UPPER
.	.	SCREEN
21	3	
22	2	LOWER
23	1	SCREEN
Column 0	33 (21H)	
1	32 (20H)	
.	.	
.	.	
31	2	

4.1.3 2040 Dot Matrix Printer

Character output to the 2040 Printer is handled by the same routine used for the screen, SENDTV. When the Printer Flag=1, set by initialization for device "P", the pixel data is written into the Print Buffer instead of into the Display File. There is no Attribute Byte. The "attributes" OVER and INVERSE which are software controlled can be active. Since the Print Buffer is always precleared to zeros, OVER has no effect. INVERSE works exactly as it does for the screen, i.e. INK pixels are zero and PAPER pixels are 1.

The Print Buffer is located at 23296 (5B00H) and is 256 (100H) bytes long, the data needed to print one line of 32 characters, each character comprised of 8 bytes (8 X 8 pixels/character). The buffer is cleared to zeros and the flag PRLEFT set to zero at power-on time (or execution of a NEW command). The PRLEFT flag is set to 1 whenever pixel data is written to the buffer. This flag is used when exit is made from a program to print any unprinted data prior to program termination. As the pixel data for a particular character is entered into the buffer, the buffer address is incremented by 32 (20H); the sequential data in the buffer therefore represents 8 complete scan lines of 32 characters. When the Print Buffer is full, or upon processing an End-of-Line (0DH), or at program termination, the contents of the buffer are written to the Printer, the buffer is cleared and the PRLEFT Flag is set to zero.

Printer I/O is done via Port 0FBH, but the Printer responds to any I/O Read/Write with Address Bit 7=1 and Address Bit 2=0. Therefore, any Port providing this combination, e.g. Ports 0FA through 0F8 and Ports 0F3 through 0F0 as well as others, will interface to the Printer. See Section 2.1.13.3 for the bit definitions for Printer I/O. The pixel data is written to the device by the routine PRSCAN in module IO_2 of the Home ROM which outputs 1 scan line (32 bytes), one bit at a time on each call to the routine.

There are two controlling routines for output to the printer. DUMPPR is called from SENDTV based on buffer full or End-of-Line control. This routine will call PRSCAN 8 times to output the 256 bytes of the Print Buffer (8 scan lines). The other routine is K_DUMP which implements the COPY command. This routine calls PRSCAN 176 times to write the contents of the primary display file for the main screen to the printer (8 X 22). All of the low level print routines are in module IO_2 of the Home ROM.

4.2 Cassette Tape

Tape I/O is done via Port 0FEH. An I/O read of Port 0FEH pulls in the cassette input on Bit 6. An I/O write of Port 0FEH Bit 3 controls the tape output with Bit 3 = 1 genrating a high output and Bit 3 = 0 generating a low output.

Data is written to the tape under software control creating the following frequencies and format:

- Sync Pattern of 4032 cycles at 806.5 Hz. (5 sec.)
- Header: 17 bytes of data identifying the following data block as either Program, Number Array, Character Array, or Binary Code and containing other control information.

  The header is written as Data, i.e. the Most Significant Bit first in each byte, 1 cycle at 2040 Hz. for a Zero and 1 cycle at 1020 Hz. for a One. The first byte is zero identifying the header. The final byte is a Checksum calculated by XOR of all preceding data bytes.
- Software delay of approximately 835 milliseconds.
- Sync Pattern of 1612 cycles at 806.5 Hz. (2 secs.)
- Transition Pattern of 1 cycle at 2400 Hz.
- Data Block: Written as Data (see above) with first byte = -1 (FFH) and a final Checksum byte.

Figure 4.2-1 shows the header formats for the various types of data.

The routines used to actually write and read the tape (W_TAPE and R_TAPE) are in the TAPE Module of the Extension ROM (see map in Appendix A). They are accessible via the Extension ROM Interface Routine listed in Figure 3.2.2-2. The general flow required to write a header and data block is:

1. Call W_TAPE with A=0. IX contains the address of the header and DE contains the length.
2. Delay loop approximately 1 second.
3. Call W__TAPE with A=FFH. IX contains the address of the data block and DE contains the length.

The R_TAPE routine performs either a LOAD (transfers data from tape to memory) or VERIFY (compare data from tape against data in memory) operation, based on the status at entry: Carry Set for Load and No Carry if Verify. As for the Write, A=Block Type (0 for Header and -1 (FFH) for Data Block). IX contains the memory address.

The tape routines return Carry=1 for successful completion and No Carry for error or Break Key detected. Both W_TAPE and R_TAPE exit via the routine W_BORD which restores the Border color based on bits 3-5 of the system variable BORDCR. If the Break Key is detected during this exit routine, a RESTART 8 (ERROR) is executed.

NOTE: The write to Port 0FEH in the exit routine restoring the Border Color has bit 3 = 0. This creates a final transition on the tape following a write operation. This transition is necessary in order to successfully read back the final data bit from some tape recording devices. If you are calling the W_TAPE routine so as to bypass the normal exit path, you must perform this final write to Port 0FEH with Bit 3 = 0 within a similar timeframe.

FIGURE 4.2-1

TAPE HEADER FORMATS

	HDTYPE(1)	HDNAME(10)	HDLEN (LSB/MSB)	HDADD (LSB/MSB)	HDVARS (LSB/MSB)
PROGRAM	0	Up to 10 ASCII Chars.	Length of Program + Variables (E_LINE - (PROG)	Starting Line No. or 8000H E.G.: 0500=Line 5 or 0080H if no Line No.	Length of Program = Offset to Variables) (VARS) - (PROG)
NO.ARRAY	1	"	Length Field from Data Structure	LSB=00 MSB=Array ID 7...........0 100 . . . . . (ASCII - 60H)	N/A(=0)
CHAR.ARRAY	2	"	Length Field from Data Structure	LSB=00 MSB=Array ID 7...........0 110 . . . . . (ASCII - 60H)	N/A(=0)
CODE (BINARY)	3	"	Length Specified in SAVE	Address Specified in SAVE	N/A (=0)

4.3 Joysticks

The two joysticks are controlled via Register 14 (I/O Port A) of the Programmable Sound Generator Chip (see Sections 2.1.6 and 2.1.7). Address and data are passed via Ports 0F5H and 0F6H respectively. The joysticks are read by first addressing Register 14 in the PSG by writing a 14 (0EH) to Port 0F5H. The data is then read by executing an IN from Port 0F6H, having the port address in Z80 Register C and the joystick (player) number in Register B (number = 1 or 2). Note that PSG Register 7, Bit 6 is assumed to be zero, enabling I/O Port A for input. If you ever use I/O Port A for output (R7,B6=1), you will want to clear Bit 6 prior to any input operation.

Sample routine:

```
GETJOY  LD    A,0EH              Load A = 14
        OUT   A,(0F5H)           Address the joystick port
        LD    B,playerno
        LD    C,0F6H             Data Port address to C
        IN    A,(C)              Joystick data to A
        CPL                      Complement to High Active
        AND   8FH                Get significant bits
```

The data read is LOW ACTIVE, i.e. all bits = 1 (byte=FFH) when the stick is at center and the button is not depressed. Figure 4.3-1 shows the interpretation of the data byte.

FIGURE 4.3-1

JOYSTICK DATA

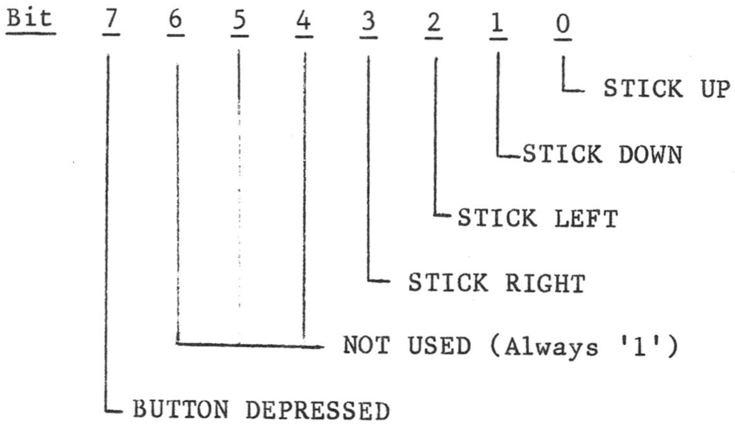

4.4 S/W Generated Sound (BEEP)

The BEEP command produces sound using the speaker by toggling Bit 4 of I/O Port 0FEH to generate a signal of a calculated frequency and duration based on the command parameters. It uses the routine PARP which takes as input two parameters, one defining the period of the signal (HL) and the other defining the number of cycles to be generated (DE) and outputs DE+1 cycles of a tone having the period 8N+236 to 8N+246 T-States where (HL) = N. Both the BEEP and PARP routines are in the K_SCAN module of the Home ROM. The PARP routine is also used to generate the keyboard "click" and the "raspberry" which can be varied by modifying the values in the system variables PIP (23609/5C39H) and RASP (23608 5C38H).

4.5 Sound Chip (SOUND)

The SOUND command writes the first parameter (register number) to Port 0F5H (address to Programmable Sound Generator) and the second parameter (load data) to Port 0F6H (data to PSG). The program line is scanned for multiple parameter pairs and continues writing address/data pairs to the PSG until the end of the statement is reached. See Section 2.1.6 for details on the hardware of the PSG.

5.0 Advanced Concepts

5.1 Cartridge Software/Hardware

5.1.1 LROS

An LROS is identified by the following overhead bytes:

Location	Description
0000	Not Used
0001	Cartridge Type 01=LROS
0002/0003	Starting Address (LSB/MSB) Address to be jumped to after Operating System initialization is complete. Order of bytes is as for a JP instruction.
0004	Memory Chunk Specification. Bits 0-7 represent Chunks 0-7 respectively in the Dock Bank in low active format: 0 if in use 1 if not in use NOTE: When writing to the Horizontal Select Register (Port F4H), the Chunk Specification is High Active

The Memory Chunk Specification is used to enable the specified chunks in the Dock Bank prior to jumping to the address specified in Location 2 and 3. Control is transferred from the Initialization code in the Extension ROM via the GOTO_BANK routine in Home Bank RAM Chunk 3, therefore Bit 3 of the Memory Chunk Specification must be set to 1 in order for the transfer to be accomplished as designed (Chunk 3 also contains the Machine Stack).

> CAUTION: If Chunk 3 is marked for use in the Dock Bank, then when the Memory Chunk Spec. is written to Port F4H by the Bank__Enable code, execution will continue from that point in Chunk 3 in the Dock Bank with the Stack Pointer addressing ROM.

An LROS is Z80 machine code and is in complete control of the TS 2068 hardware after transfer to the starting address has been made. It can directly implement an application, or it can support multiple applications by implementing a language other than BASIC. An AROS dependent on such an LROS would have to be part of the same cartridge since there is only one cartridge connector.

Interruption Mode 1 has been set by the TS 2068 and interruptions are enabled prior to passing control to the LROS starting address, therefore the LROS must contain appropriate code at location 56 (38H) to cover the case where the interruption occurs after Chunk 0 in the Dock Bank has been enabled, but before any action by the software cartridge to disable the interruption has been taken. Once control is transferred, the LROS may then disable the standard TS 2068 interruption by setting bit 6 of Port FFH, mask the interruption by executing a DI instruction, or set a different Interruption Mode. It may change the location of the Machine Stack. It may also change the memory selection by writing to Port 0F4H with each bit set to 1 for the corresponding chunk to be enabled in the Dock Bank (high active format) or 0 to be enabled in the Home Bank. Thus, an LROS may contain code in Chunk 3, but it should be enabled after the OS RAM code has finished execution.

Now that your LROS is in the driver's seat, you are on your own! Some important points to remember when mapping your Dock Bank memory and doing bank switching are:

1. The Display RAM is in Home Bank Chunk 2 for the primary display file and Chunk 3 for the second display file. This memory is accessed independently by the video hardware. The software only needs to enable it when actually reading or writing it.

2. The Dock Bank and Extension ROM Bank are mutually exclusive since they share the Horizontal Select Register in Port F4H. You will need a routine in the Home Bank RAM to do any switching between the two. You must also be careful to have the appropriate Home Bank Chunks enabled which are referenced by the Extension ROM code, e.g. the System Variables in Chunk 2 or possibly the bank switching code in Chunk 3.

3. Some interesting switching routines can be constructed by having parallel code in shadowing chunks of memory to take advantage of the "instant" switch in execution from one bank to another when the memory selection is made. E.g., a routine in the Dock Bank ROM in Chunk 6 could push a Home Bank address on the stack, write to Port F4H enabling Chunk 6 and any other desired chunks in the Home Bank (by deselecting them in the Dock), and have code at the next sequential instruction address in Home Bank RAM Chunk 6 to continue the path. A Return

instruction, for example, would pass control to the address on the stack. Code to switch memory back to the Dock Bank could be mapped in a similar way.

4. If you plan to use any of the System software routines, unless you know otherwise it is probably necessary to maintain the contents of Home Bank Chunks 2 and 3 intact (and Chunk 7 if the OS RAM routines have been relocated). The system routines rely heavily on the System Variables and assume that any pointers in them are pointing to the Home Bank. See Section 3.3.4.1 for details on using the RAM Interruption Handler and Section 6.0 for known corrections when using System S/W.

5. If you design an LROS implementing a higher-level language and want to support an AROS application, you must design your own initialization code to detect the presence of such an AROS. The TS 2068 will not look for the presence of an AROS if an LROS is present, therefore there will be no entry for the AROS in the System Configuration Table. Note that since there is only one cartridge connector, such an AROS would also have to be integrated with the supporting LROS in a single cartridge or cartridge board.

5.1.2 AROS

An AROS is identified by the following overhead bytes:

Location	Description
32768 (8000H)	Language Type 1 = BASIC [and machine code] 2 = Machine code only (Any other value will result in Error S, Missing LROS)
32769 (8001H)	Cartridge Type 2 = AROS
32770/32771 (8002/8003H)	Starting Address(LSB/MSB) BASIC AROS = Addrs. of First Program Line Machine Code AROS = Addrs. of First Z80 Instruction
32772 (8004H)	Memory Chunk Specification Bits 0-7 represent Chunks 0-7 respectively in the Dock Bank in low active format as follows: 0 if in use 1 if not in use NOTE: Bits 0-3 must be set to 1 for proper execution.
32773 (8005H)	Autostart Specification 0 = No Autostart 1 = Autostart
32774/32775 (8006/8007H)	Number of bytes of RAM to be Reserved for Machine Code Variables (LSB/MSB - 0100H=1 byte Reserved; 0002H=512 bytes Reserved.

5.1.2.1 BASIC AROS

A BASIC AROS is supported by special code in the System ROM (Section 3.2.1.2). The portion of the cartridge containing BASIC program lines is restricted to the upper half of the memory space beginning at location 32776 (8008H) in the Dock Bank. Support for User-Defined Functions, which requires searching for the definition parameters within the program, is not implemented. Also, because the support code interfaces directly to the bank switching code in Home RAM Chunk 3 (does not allow for it to be relocated to Chunk 7), a BASIC AROS cannot utilize the advanced video modes and also execute BASIC program statements. If the cartridge contained machine code supporting advanced video modes, the TS 2068 would have to be returned to "Normal" video mode with the RAM mapped accordingly (see Figure 1.1-3) if control were to be returned to the BASIC Interpreter USR code.

Since execution of the cartridge BASIC program is done by copying program lines to a buffer in the Home Bank RAM (ARSBUF), the most efficient cartridge execution is obtained by making program lines as large as possible, i.e. making use of the multi-statement feature of the TS 2068. The reverse is true concerning execution of READ commands. An entire DATA statement is copied to the Home Bank RAM, but only the current item is accessed. It therefore will be more efficient to not make DATA statements excessively long. The BASIC program lines appear in the cartridge in exactly the same format used in the RAM, i.e. Line Number (2 bytes), Length (2 bytes), Command Token, etc. terminated by an Enter (0DH). Numerical constants appearing in a program line are followed by the CHR$ (0EH) byte and 5-byte floating point format described in the User Manual (see Appendix C of the TS 2068 User Manual). The Variables area is built in the RAM (address in VARS) exactly as though the program were in the RAM. All variables, including arrays, are built at the time of program execution - there is no provision for copying or accessing pre-defined variables from the cartridge, however, see Section 5.3.2. The last program line must be followed by a terminator byte having the Most Significant Bit set (e.g. 80H), otherwise the Interpreter cannot detect the end of the program.

A BASIC AROS may contain machine code accessed via the USR function. If the machine code address is within the memory designated by the AROS Memory Select Specification as "in use", the Dock Bank will be enabled, otherwise the machine code address is assumed to be in the Home Bank. (See Section 6.0 for details on known problems in this area of the code.) Obviously, once control is transferred to the machine code in the AROS, the ball is now in your court. You could have additional machine code residing in the lower half of the Dock Bank memory space which you can now switch in. You only have to know what you're about. If and when you are ready to go back to executing your BASIC program, you must enable Chunks 0-3 in the Home Bank and have the stack and other Home Bank RAM in the proper state for return to the USR function code in the BASIC Interpreter, i.e. what it was when the USR function passed control to you.

The Autostart feature begins execution out of the BASIC AROS immediately after system initialization. If the Autostart parameter is zero, control will go to the BASIC Interpreter as if there were no cartridge installed, although internal flags have been set noting that a BASIC AROS is present. The cartridge will be started when you execute a RUN or GOTO Line Number command.

The final parameter in the overhead bytes allows you to reserve RAM beginning in Chunk 3 at Location 26688 (6840H) for machine code and/or machine code variables. The designated number of bytes are reserved by the AROS support code prior to beginning program execution. The AROS buffer (ARSBUF) begins immediately following this reserved area (see Fig. 1.1-3). Note that this area is part of the RAM that gets relocated if the second display file is opened. Therefore access to your machine code and/or variables should be conditional on the video mode rather than direct if you are going to be using the advanced video modes. This reserved area begins at 31488 (7B00H) when the second display file is open. Remember -- use of the second display file and execution of BASIC program from the cartridge are mutually exclusive.

The standard technique of reserving space for machine code by modifying RAMTOP could also be used to place machine code/variables at the top of the Home Bank RAM. If you place code above (RAMTOP) which is to be accessed via the BASIC USR function, the affected memory chunk(s) cannot be marked as "in use" in the cartridge in the AROS Memory Selection Specification.

5.1.2.2 Machine Code AROS

A machine code AROS is similar to an LROS with the exception that it is dependent on the System ROM for interruption handling if the interruption is enabled. This implies that Chunks 0-3 are enabled in the Home Bank.

The Autostart parameter should be set to 1 since if it is zero, control will be passed to the BASIC Interpreter as if the cartridge were not present. There is no BASIC command to directly start execution of a Machine Code AROS.

Because of a "bug" in the Initialization code handling a Machine Code AROS, the parameter specifying the number of bytes to be reserved for machine code variables must be adjusted by adding 21 (15H) to the actual number of bytes needed. This preserves the 21 byte CHANS area starting at 26688 (6840H). The reserved area then starts at 26709 (6855H) (or 31488 (7B15H) when the second display file is open). Access to the variables should be conditional based on the video mode rather than direct if you plan to use the advanced video modes. If you do not plan to utilize any of the system software, you can disregard the above and "do your own thing" with the RAM.

See Section 6.0 for known corrections when using System S/W.

5.1.3 EPROM Cartridge Board Application

Figure 5.1-1 provides the logic diagram for a pluggable EPROM cartridge board capable of configuring up to four 16K-byte (128K-bit) EPROM's of the 27128 type. The artwork for the PC board implementing that logic diagram is provided in Figures 5.1-2, 5.1-3 and 5.1-4 for the Component Side art, the Solder Side art, and the Solder Mask (one common mask for both sides), respectively. To match the schematic diagram, the solder side requires the following rework:

CUT artwork U4-pin 21 to U5-pin 9

ADD jumper U4-pin 20 to U5-pin 9

See Section 2.4.2 for mechanical details of the connector portion of the PCB.

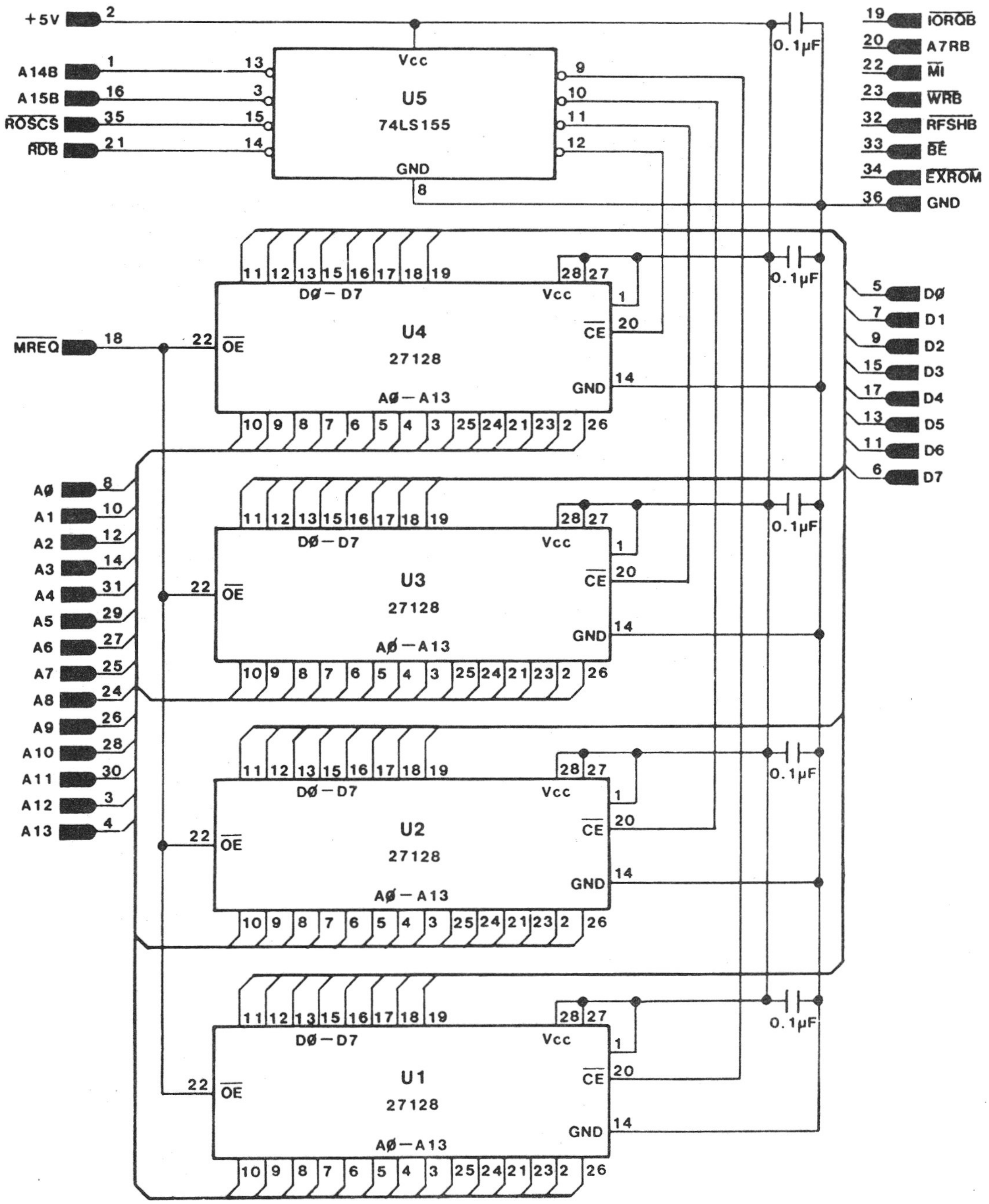
+5V
A14B
A15B
ROSCS
RDB
U5
74LS155
Vcc
GND
0.1µF
IORQB
A7RB
MI
WRB
RFSHB
BE
EXROM
GND
MREQ
U4
U3
U2
U1
27128
DØ-D7
AØ-A13
OE
CE
Vcc
GND
AØ
A1
A2
A3
A4
A5
A6
A7
A8
A9
A10
A11
A12
A13
DØ
D1
D2
D3
D4
D5
D6
D7

Figure 5.1-1. EPROM BOARD SCHEMATIC

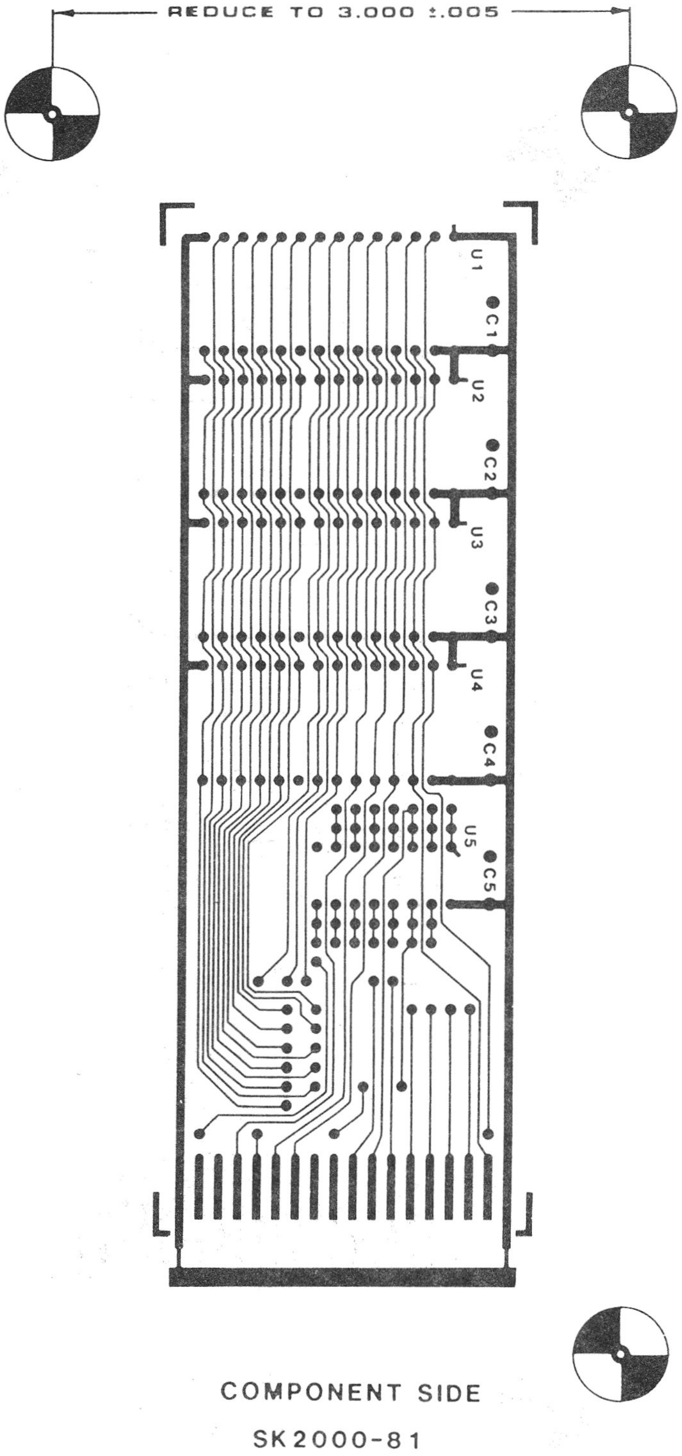
REDUCE TO 3.000 ±.005
U1
C1
U2
C2
U3
C3
U4
C4
U5
C5
COMPONENT SIDE
SK2000-81

Figure 5.1-2. EPROM CARTRIDGE BOARD - COMPONENT SIDE

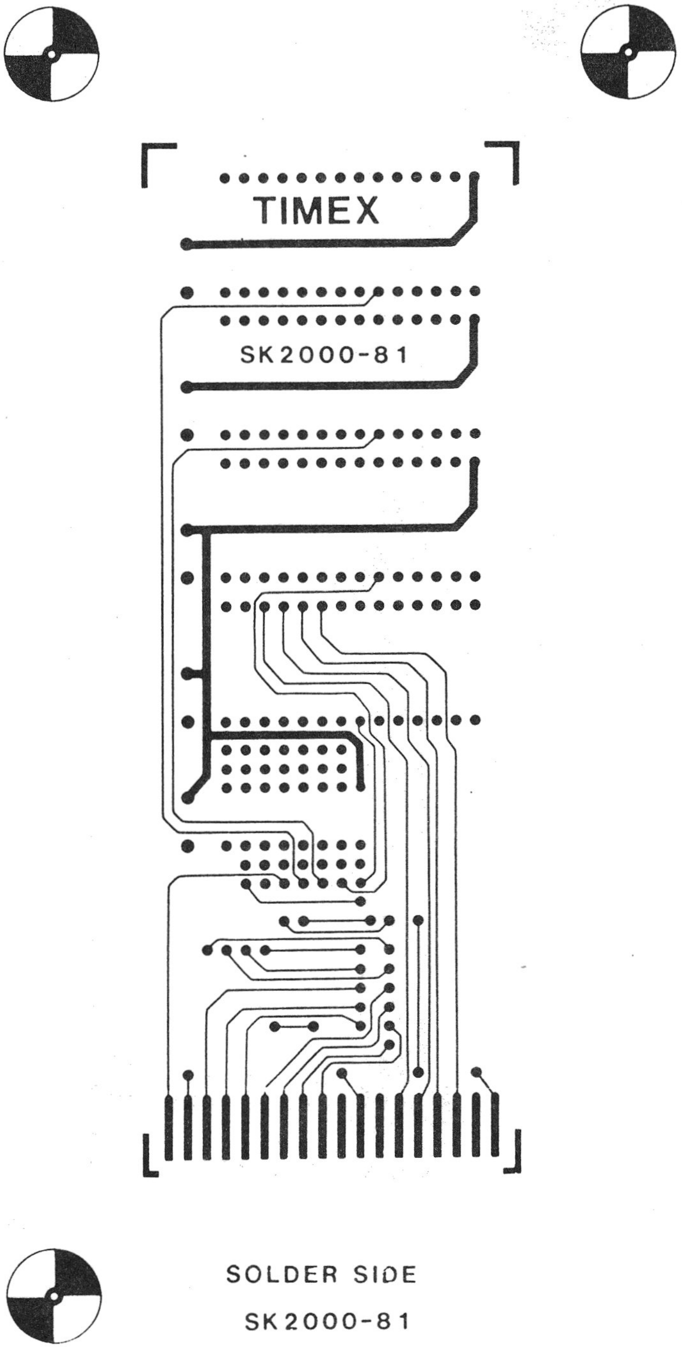
TIMEX
SK2000-81
SOLDER SIDE
SK2000-81

Figure 5.1-3. EPROM CARTRIDGE BOARD - SOLDER SIDE

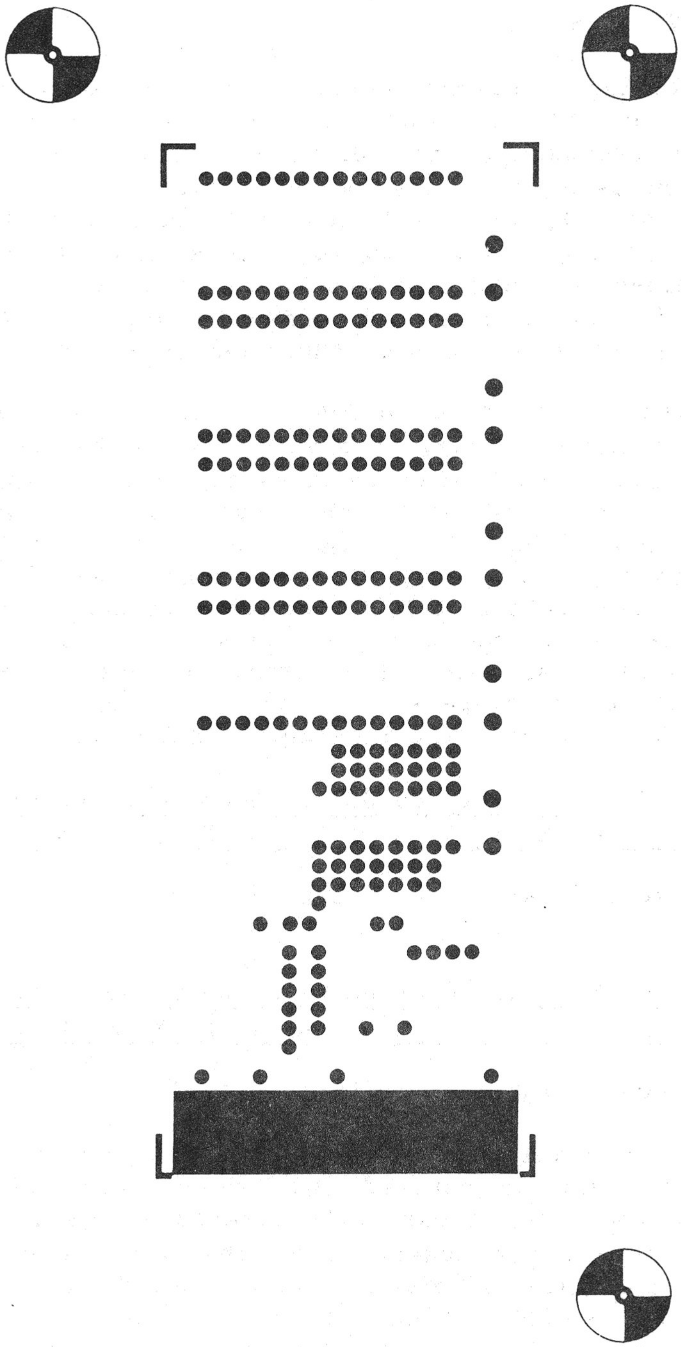

SOLDER MASK

SK2000-81

Figure 5.1-4. EPROM CARTRIDGE BOARD - SOLDER MASK

5.2 Advanced Video Modes

The following sections describe the various video modes available on the TS 2068 and the major software support functions necessary. See Sections 3.2.2.3 and 3.2.2.4 for details on using the Video Mode Change Service. Appendix C contains descriptions and code listings for a number of software packages developed by Timex that support various screen modes and applications. Reference to these packages should aid in gaining an understanding of the software techniques needed to support the video mode hardware.

The TS 2068 video mode hardware works out of two areas of RAM, the primary display file at 4000H and the second display file at 6000H. Each area consists of 6912 (1B00H) bytes used for pixel and/or attribute data based on the mode selected via bits 0-5 of Port FFH. The pixel data area divides into three blocks, each supporting 8 contiguous lines on the screen. See Section 2.1.10 for details on organization of the display RAM. Because the two display files occupy the same relative positions within their respective 8K Chunks, by setting/clearing Address Bit 13 a software routine can address the corresponding location in each file:

Address Bit	15	14	13	12	11	10	09	08	07	06	05	04	03	02	01	00	
	0	1	0	X	X	X	X	X	X	X	X	X	X	X	X	X	DF1

4000 - 5AFFH (Bit 13 = 0)

Address Bit	15	14	13	12	11	10	09	08	07	06	05	04	03	02	01	00	
	0	1	1	X	X	X	X	X	X	X	X	X	X	X	X	X	DF2

6000 - 7AFFH (Bit 13 = 1)

In order to display a character on the screen, 8 bytes of pixel data must be entered into the display file, one for each scan row. For a particular character position, the scan rows are 100H bytes apart. E.g, the 8 bytes of pixel data for position Line 0/Column 0 are located at 4000H, 4100H, 4200H,......,4700H. Since this is the first character position on the screen, its Attribute byte, in Normal Mode, is the first byte in the Attribute File which starts at 5800H. The 768 (300H) Attribute Bytes are in sequential order starting at position 0/0 through 0/31,1/0 through 1/31, and so forth, ending with 23/0 through 23/31.

One method of determining the starting display file address for a particular line/column position is to build a table containing the starting address of each of the 24 lines (2 bytes per entry). Then construct an algorithm that takes the line number and forms an index by multiplying it by 2 (shift left 1), add the index to the base address of the table, and read out the display file address. The column position is then simply an offset added to this address. By testing VIDMOD (23746 - 5CC2H) you can determine whether to set Bit 13 for the second display file, e.g. because you are in an odd column in 64-column mode, or simply because you are using the second display file in dual screen mode.

The following example illustrates this method. The table entries are in Hex:

		TABLE		
LINE #	INDEX	LSB/MSB		
0	0	00 40	4000H =	Line 0 (Top of Screen)
1	2	20 40		Line 1
2	4	40 40		Line 2
.	.	(+20H)		
.	.	(+20H)		
7	14(0EH)	E0 40		Line 7 (End of Upper Block)
8	16(10H)	00 48	4800H =	Line 8 (Top of Middle Block)
9	18(12H)	20 48		Line 9
.	.	(+20H)		
.	.	(+20H)		
15	30(1EH)	E0 48		Line 15(End of Middle Block)
16	32(20H)	00 50	5000H =	Line 16(Top of Bottom Block)
17	34(22H)	20 50		Line 17
.	.	(+20H)		
.	.	(+20H)		
23	46(2EH).....	E0 50		Line 23(End of Bottom Block)

Line 17, Column 23 (11H/17H) would yield a display file address of 5020H + 17H = 5037H. If VIDMOD indicated the second display file was to be used, setting Bit 13 of the address would yield 7037H. If we were using 64-column mode, because the column is odd (Bit 0=1) we would set Bit 13 of the starting line address getting 7020H, then divide the column address by 2 (shift right 1) since there are only 32 columns in each display file. This would give us an offset of 11 (0BH) which added to the starting address results in a display file address of 702BH. Having the display file address, we now insert the 8 bytes of pixel data for the character desired, incrementing the display file address by 100H between each write (this is easily done by simply incrementing the upper register of the register pair containing the address). The following routine is a simplified version illustrating this process. It assumes that Reg. Pair DE contains the address of the desired character in the character table and that HL contains the address of the desired position in the display file.

```
              .
              .
              .
             LD    B,8         Set Scan Count
        LOOP LD    A,(DE)      Get pixel pattern
             LD    (HL),A      Write to Display File
             INC   DE          Next pixel pattern byte
             INC   H           Next DF Position (+100H)
             DJNZ  LOOP        Continue for 8 Scan Rows
              .
              .
              .
```

Finally, we must update the Attribute Byte controlling the updated character position. The following sample algorithm will formulate the Attribute File address given the address of any of the scan rows of the character position. We will assume we have saved off the starting display file address and now have it in Register Pair HL.

```
GETATT      LD    A,H          MSB of DF Address
            RRCA               Shift right circular
            RRCA               to get Bits 3&4 (Block #)
            RRCA               to positions 0&1
            AND   3            Clear other bits
            OR    58H          OR in Attr.File Base Adrs.
            LD    H,A          Update MSB

                               NOTE:  The LSB is the same as
                                      for the pixel data.
```

Using our first example, with a Display File address of 5037H, the Attribute File address would be 5A37H. The second example was using 64-Column Mode which does not require attribute file update (attributes determined by video mode setting).

See Section 5.2.2 for a sample algorithm to formulate the display file address for X,Y pixel coordinates. The above routine for calculating Attribute File address would be substituted for the method used in the example if not working in High Resolution Graphics mode.

In addition to data insertion, two major screen support functions are scrolling and clearing the screen. Scrolling is done in the System ROM by copying the entire display file data and attribute controls up one line position (Line 1 to Line 0, Line 2 to Line 1, etc.) and inserting a blank line at the bottom. Numerous more elaborate scrolling techniques can be implemented using various directions (up, down, left, right) and smaller areas or "windows" of the screen. Similarly, clearing the screen, which consists of writing zeros to the data file and updating the attribute bytes to a uniform value, can be implemented on smaller sections of the screen. The software packages in Appendix C contain examples of such implementations.

5.2.1 Dual Screen Mode

In this mode the second display file is used to provide a second independent screen having the same data and attribute organization as the primary display file. By writing to Port FFH with Bits 0-5 = 1 (Bit 0 set), the second display file is activated at the video screen. Appendix C contains a software package supporting Dual Screen Mode. The software package uses the system variable VIDMOD to determine which display file is the target of the current operation. Special values for VIDMOD have been defined to permit building of one display file while the other is active at the screen so that a complete screen image is ready when the hardware mode is changed. Copy and Exchange routines have been provided to move data within and between the two display files. This enables the BASIC graphics commands like PLOT, CIRCLE and DRAW, which work only in the primary display file, to be used to create screens which are then moved into the second display file.

Because the System ROM works only in the primary display file, you can come up with some unusual situations when you have the second display file active at the screen and you are executing BASIC or using the System ROM routines. If an error occurs, for example, the error message will be placed into the primary display file and the ROM will be waiting for input from the keyboard to direct the next action, but all of this is invisible since you have the other display file active. The machine will appear to be "hung", but it is only doing its normal thing. Be prepared to enter a OUT 255,0 to an invisible command line in order to switch the display back to the standard file!!! Don't forget to also set VIDMOD (POKE 23746,128) to keep things consistent inside the dual screen support code.

5.2.2 High Resolution Graphics Mode

This mode is set by writing to Port 0FFH with Bits 0-5=2 (Bit 1 set). In this mode, also called Extended Color Mode, the second display file is used to expand the number of Attribute bytes from one for each 8 X 8 pixel group to one for each 8 X 1 pixel group thus giving 32 X 192 positions within each of which two colors plus Bright and Flash can be defined. Each byte of pixel data entered into the primary display file has its own Attribute byte in the corresponding location in the second display file, e.g. the byte written to Location 4000H has its Attribute byte at Location 6000H, the byte at 47FFH (last byte of last scan row in Line 7) has its Attribute byte at Location 67FFH, the byte at 57FFH (last byte of last scan row in Line 23) has its Attribute byte at Location 77FFH. The routine writing data to the screen would therefore enter the pixel data to the desired location and then set Address Bit 13 of the Primary Display File address and write the desired attribute control byte to the resultant location. If normal characters are being written to the screen in this mode, eight Attribute bytes must also be written, one for each of the bytes defining the character. The same technique would be used for writing to both display files, i.e. for each of the seven bytes entered after the first, the display file address would be incremented by 256 (100H).

The System ROM graphics commands (PLOT, DRAW and CIRCLE) place data into the Primary Display File and update the Attribute File associated with the standard video mode (5800H-5AFFH). In High Resolution Graphics Mode, the hardware does not access this area for attribute control, therefore its contents have no visible effect. If before or immediately following execution of the BASIC graphics operation, you update the attribute control information in the second display file, you could possibly take advantage of the System ROM graphics capability. Admittedly, this is not a simple operation in the case of circles or drawing diagonal lines and it will be more efficient to develop code specifically to support this video mode.

The following sample routine takes as input two single byte binary digits representing the X and Y coordinates of a pixel position on the screen. It formulates the display file address of the byte containing the pixel, creates a pattern or mask byte for the specified bit position, sets the bit in the display file, and updates the attribute byte (High Resolution Graphics Mode assumed). This represents a simplified version of the approach used in the System ROM graphics support routines PLOTBC and SCRMBL.

The two inputs are assumed to be as follows:

Reg. C =	X Coordinate 0-255 (0-FFH) going left to right across the screen.
Reg. B =	Y Coordinate 0-191 (0-BFH) going from bottom to top of the screen.

NOTE: This covers the full vertical range of 192 positions.

The Y Coordinate is checked for valid range and reversed directionally so that 0 represents the top of the screen and 191 represents the bottom. After this reversal, the two coordinates represent the following values:

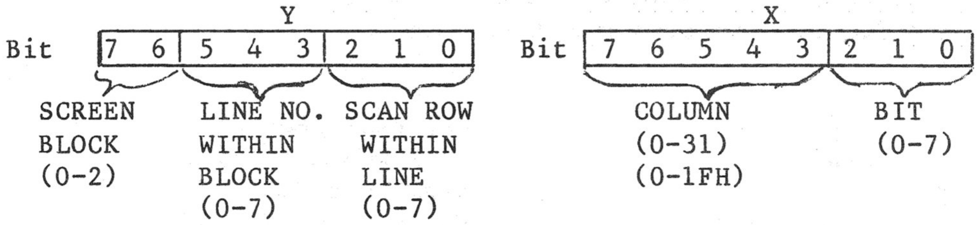

We first formulate the MSB of the display file address using the Block and Scan Line information in the Y Coordinate:

```
PLOTXY      PUSH  (SAVECO),BC       Save coordinates
            LD    A,191             Test Y within range
            SUB   B
            JP    C,ERROR           Y coordinate beyond range
            LD    B,A               Y Coordinate now 0=Top
            AND   0C0H              Get Block No. (0-2)
            RRA                     Shift Bits to Pos. 3&4
            RRA
            RRA
            LD    H,A               Save Block Bits
            LD    A,B               Y Coordinate
            AND   07                Get Scan Row Bits
            OR    H                 Combine Block and Scan Row
            OR    40H               Base Address of DF (4000H)
            LD    H,A               H = MSB of DF Address
```

Next we formulate the LSB of the display file address using the Line information from the Y Coordinate and the Column information from the X Coordinate:

```
            LD    A,C               Get X Coordinate
            RLCA                    Align to Pick Up Line
            RLCA                    Bits from Y
            RLCA                    A=2 LS Bits Column/XXX/3 MS
                                    Bits Column
            AND   0C7H              Clear Bits 3-5
            LD    L,A               Save A in L
            LD    A,B               Get Y Coordinate
            AND   38H               Get Line Bits
            OR    L                 Combine with Col.Bits
            RLCA                    Shift to Final Position
            RLCA                    A=Line #/Column
            LD    L,A               L = LSB Display File Addrs.
```

Next we get the pixel position within the byte by taking the last 3 bits of the X Coordinate and create a mask byte having all bits zero except the addressed pixel. This mask is then used to set the bit in the Display File. The address is set to Display File 2 to update the Attribute File (High Res. Graphics Mode is assumed to be active), and the routine is finished. The memory locations defined as ATTR and SAVECO are for illustration purposes only:

```
        LD      A,C                 Get Pixel Position
        AND     7                   0=Leftmost (MSB);7=
;                                   Rightmost (LSB)
        LD      B,A                 Use as Control Count
        INC     B                   B=1-8
        LD      A,00000001B         Bit Mask
LOOP    RRCA                        Rotate Mask Bit
        DJNZ    LOOP                to Proper Position
        OR      (HL)                OR Bit into DF
        LD      A,20H
        OR      H                   Set Bit 13 for DF2
        LD      H,A                 HL = Attribute File
        LD      A,(ATTR)            Get Attribute Byte
        LD      (HL),A              Update Attribute File
        POP     BC                  Original X/Y to BC Regs.
        RET
```

Repetitive calls to this routine with the appropriate X/Y Coordinate values will "draw" on the screen. The System ROM routines for drawing lines and circles calculate the successive X/Y Coordinate values and use common low-level routines similar to the above to place each pixel in the display file.

5.2.3 64-Column Mode

In this mode, set by writing to Port OFFH with Bits 0-2=6 (Bits 1 and 2 set) and Bits 3-5 selecting ink color (0-7), the pixel data portions of the two display files are merged by the hardware on an alternating column basis to produce 64-columns across the screen. All even columns (0,2,4....62) are derived from the primary display file and all odd columns (1,3,5.....63) are derived from the second display file. There are still 24 lines vertically from top to bottom. The attributes are controlled by bits 3-5 written to Port FFH selecting one of eight ink/paper combinations. The Bright and Flash attributes are fixed at 0 and the Border is fixed to match the paper color. The Attribute Files in RAM at 5800H-5AFFH (primary display file) and 7800H-7AFFH (second display file) are not utilized in this mode.

Software supporting this mode must set up the display file address for character insertion based on the column position (even=DF1; odd=DF2). When scrolling the screen (or a portion of it), any line of text on the screen requires the same operation to be done at the corresponding locations in each display file. This is also true to clear the screen (or a portion of it). To save a Screen on tape you must save two Code files, one for each display file. The SAVE filename SCREEN$ will work for the Primary Display File only. You will have to specifically SAVE the second display file via a SAVE filename CODE 24576,6144. Note also that because the Border color is fixed by the video mode, you will not see the usual "stripes" during a tape operation.

Code to support an 80-column mode screen was developed utilizing the 64-column hardware mode and redefining the character size to a 6 X 8 pixel group (there is really room for 84 characters if the full 256 pixel width is used). Since individual characters now can span the two display files (e.g. 2 pixels in DF1 and 4 in DF2) insertion of data into the display files involves masking the 6-bit character (or portion thereof) with the 8 bits of data read/written from/to the display file.

Appendix C contains descriptions and code listings of software packages supporting 64 and 80-Column modes.

5.2.4 Other

Appendix C also contains software packages supporting the following video screen features:

A. 40-Column Mode - utilizes the 6 X 8 character set defined for 80-Column Mode in "normal" mode. May be combined with the Dual Screen package.

B. Sprites - supports movement of software-defined objects and multi-directional screen scrolling services in the Primary Display File. You must create the actual bit map defining the shape of your sprite(s), but this package does the rest.

5.3 Other Advanced Concepts

5.3.1 Interruption Fielding

For a machine code program executing in the Home RAM, you can intercept the 17 ms. interruption for your own purposes by permanently enabling Chunk 0 in the Extension ROM Bank (write a 1 to Port 0F4H and always have Bit 7 of Port 0FFH = 1) and inserting at Location 25262 (62AE Hex) a branch to your own interruption handler. (Or if VIDMOD is not zero, insert your branch instruction at Location 64110 (FA6EH).) By doing this you are forcing the interruption to branch to the RAM and then bypassing the OS RAM Interruption Handler - see Sections 3.2.2.1 and 3.3.3.1. Because the Video Mode Change Service automatically updates internal branch addresses in the OS RAM code when it is relocated between Chunk 3 and Chunk 7, you probably do not want to directly overlay the OS RAM Interruption Handler with your own code if you will be using the Video Mode service. Your branch instruction at 62AEH, however, will be copied unmodified to location FA6EH in Chunk 7 and vice versa.

Note that this technique cannot be used if you are using BASIC since then you must have Chunk 0 enabled in the Home Bank. It also cannot be used from a cartridge because the memory selection hardware (Port 0F4H) is common to the Dock and Extension ROM Banks and can only enable one of them at a given time as selected by Bit 7 of Port 0FFH.

5.3.2 BASIC AROS Variables

In order to use pre-defined arrays and/or other BASIC variables, store them in the cartridge (possibly in the lower half of the addressable space which is not usable for BASIC program) and branch to a machine code routine via the USR function at the beginning of your BASIC AROS program. Use this routine to do the necessary memory selection and copy your data from the cartridge to the RAM (address in VARS). Adjust the System Variables E_LINE, WORKSP, STKBOT and STKEND to all point to the first free memory following your BASIC variables. Of course, all BASIC variables must conform to the format expected by the BASIC Interpreter. In addition to BASIC structures, you can also store screen images and machine code/variables in the cartridge for transfer to the RAM under your control. Consider using the XFER__BYTES service in the OS RAM.

6.0 Known "BUGS" and Corrections

This section describes the known problems in the TS 2068 System Software and gives corrections or work-arounds where these have been defined.

6.1 LROS and Autostart Machine Code AROS

6.1.1 If you will be using the System ROM Keyboard routines and accessing the input character code from system variable LAST_K (5C08H), you must initialize the TS 2068 to "L" mode by setting the system variable MODE at 23617(5C41H) to zero and setting Bit 3 of FLAGS (23611 -5C3BH) to 1. (The TS 2068 is in "K" mode when control is passed from System Initialization to the Cartridge; Keyword Token codes will be placed in LAST_K instead of character codes.)

6.1.2 If you will be using the System ROM Calculator routines (RESTART 40 (28H)) or any ROM routines that invoke them, you must initialize the System Variable MEM by doing the following:

```
LD     HL,5C92H            Set HL=MEMBOT
LD     (5C68H),HL          Initialize MEM
```

6.1.3 Chunk 3 must not be designated as "in use" by the Cartridge Memory Selection Specification byte. This will cause deselection of the bank switching code prior to completion of the transfer of control to the cartridge starting address. Once control has been transferred, the cartridge code may then enable Chunk 3 in the Dock Bank if desired. (See Section 5.1.)

6.1.4 No entry is made in the System Configuration Table for an AROS if an LROS is present. This means that an LROS designed to support either RAM based or cartridge based applications must include code for detection of an AROS.

6.2 Machine Code AROS

When setting the AROS Overhead parameter requesting RAM space for machine code variables, 21 + n bytes (15H + n) must be requested where n is the number of bytes needed. The machine language variables area then starts at 6855H immediately following the 21-byte CHANS area. (See Section 5.1.2.3.) NOTE: This does not apply to an AROS that contains both BASIC and machine code.

6.3 BASIC AROS

6.3.1 USR Function - When testing the USR address against the Cartridge Memory Selection byte to determine if the address is in the Home Bank or the Dock Bank, the wrong nibble is tested in the register thus a valid cartridge address could be erroneously processed as a Home Bank address. Since the ROM code cannot be corrected, the machine code in the cartridge would have to be moved to an address that does not cause a problem.

6.3.2 FOR/NEXT - If the limit of the FOR statement has already been passed on its initial execution, (e.g. FOR A=1 TO 10 and A has been set to 12), control is passed to the statement following the corresponding NEXT. In the AROS support code, the address of this statement is lost giving unpredictable results. Since the ROM code cannot be corrected, care must be taken not to use this technique in an AROS Cartridge. Normal usage of FOR/NEXT loops is not affected.

6.3.3 Advanced Video Modes - Because the BASIC AROS support code interfaces directly to the Bank Switching code in Chunk 3 (does not access based on its relocatability), the second display file cannot be open when executing BASIC program from an AROS.

6.4 Video Mode Change Service

6.4.1 Available Memory Test - When the size of memory needed is calculated by adding the size of the second display file (6912 bytes or 1B00H) to the memory now in use (address in System Variable STKEND), the code fails to check for overflow. Thus if the address in STKEND is greater than 58623 (E4FFH), the fact that there is not enough free memory to open the second display file will not be detected and the system will "crash". If your BASIC program and/or variables area are large, you may want to make this test yourself prior to invoking the Video Mode Change Service in order to avoid this problem. The size of memory needed is subsequently tested against the contents of RAMTOP and if there is not sufficient space (value in RAMTOP is less than size needed), you will get Error 4, Out of Memory.

6.4.2 RAMTOP - When the machine stack and OS RAM code is moved to Chunk 7, the User Defined Graphics area is moved down in RAM by 2112 bytes (840H) to make room for the stack and OS RAM routines at the top of memory. The pointer in UDG is updated, however, the value in RAMTOP is not modified to insure that the relocated UDG area as well as the OS code and stack are protected from expansion of the BASIC program. You can avoid problems by setting RAMTOP via a CLEAR command specifying an address no greater than 63255 (F717H) prior to invoking the Video Mode Change Service. This reserves space between RAMTOP and the end of memory of 2280 bytes (8E8H) utilized as:

```
  168 bytes  (A8H) User Defined Graphics (21 X 8)
 2112 bytes (840H) Machine Stack and OS Routines
 ----       ------
 2280       (8E8H)
```

```
Example:             RAMTOP = 63255    (F717H)
           + Reserved Area    2280    (08E8H)
                             -----    -------
                             65535    (FFFFH)
```

The software packages in Appendix C are written assuming that RAMTOP is set to 57343 (DFFFH) or lower to protect the machine code which is loaded beginning at 57344 (E000H).

6.4.3 NEW Command - If you have used the Video Mode Change Service to open the second display file and now wish to execute the NEW command, you should first return the computer to "normal" mode by calling the video mode service with A=zero. This returns the User Defined Graphics and other RAM structures to their normal locations. If you don't do this, the UDG area will remain in the alternate location and, if you have not corrected RAMTOP as explained above, part or all of your UDG area could be cleared to zeros by the NEW command.

6.4.4 VIDMOD - When Mode 128 (80H) is designated for activating the Primary Display File in Dual Screen Mode the System Variable VIDMOD at 23746 (5CC2H) is set to zero instead of to 128. This creates a potential problem if the 17 ms. interruption occurs before VIDMOD can be corrected since the interruption fielder will branch to Chunk 3 instead of to Chunk 7 and Chunk 3 is now in use for the second display file. This problem is corrected by disabling the interruption prior to calling the Video Mode Change Service and setting VIDMOD to the correct value prior to re-enabling it. These corrections are included in the Extension ROM Interface Routine in Figure 3.2.2-2.

NOTE: On an initial access changing video mode from normal to Mode 128, the interruption is re-enabled within the Video Mode Change Service itself after copying the stack and other Chunk 3 data to Chunk 7. This cannot be corrected, but has not proven to present a problem in actual use. At the point where the interruption is first enabled, the Chunk 3 code is still intact allowing for correct processing of one interruption, and the path length from there to the point of correcting VIDMOD is apparently less than 17 ms. The interruption is also re-enabled within the Video Mode Change Service if you have applied the patches for the BANK_ENABLE and RESTORE_STATUS routines (Section 6.5.4) which are executed in connection with inserting space into the RAM to open the second display file. Again, this has not proven to be a problem in actual use.

6.4.4 Interruption Inhibit - By setting Bit 6 of Port 0FFH to a 1, the normal 17 ms. interruption generated from the SCLD to the Z80A CPU will be inhibited. When Port 0FFH is written to by the Video Mode Change Service, Bit 6 is forced to zero. If you wish to inhibit the normal interruption via this mechanism, and also plan to use the Video Mode Change Service, it is recommended that you first invoke the service to remap the RAM and open the second display file, then set Bit 6 of Port 0FFH to inhibit the normal interruption and write your own routine(s) for subsequent changing of the video mode setting that do not involve remapping the RAM. In this way you can maintain the value in Bit 6.

6.5 OS RAM Routines

In patching the OS RAM routines, care must be taken not to relocate CALL and JP instructions since this affects the modification of the code when it is moved between Chunks 3 and 7. All of the code containing actual addresses must be modified to reflect the relocation and this is done using a table in the Extension ROM. Since the table cannot be changed, none of these instructions can be moved. Also, any CALL or JP instructions added must be modified by you when the code is relocated.

6.5.1 Function Dispatcher -For a variety of reasons such as conflict with use of the IX Register, incorrect entries in the ROM Function Dispatcher Jump Table, etc. some Service Codes have been deleted from the Function Dispatcher table (Table 3.3.4-2). In addition, the following correction to the GET_STATUS routine is required in order to successfully utilize the Function Dispatcher from a cartridge.

6.5.2 GET_STATUS- Returns invalid memory selection status for the Home Bank, ROM Extension and Dock. This results in switching out of either the Home Bank or the Dock when status is "restored". This affects use of the Function Dispatcher and GET_WORD routines, and any other code using GET_STATUS. Figure 6.5-1 shows the patches and additions necessary to correct this routine.

6.5.3 PUT_WORD- Write data passed in Reg. Pair DE is overwritten prior to use. Figure 6.5-2 shows corrections.

6.5.4 BANK_ENABLE and RESTORE_STATUS-

If the 17 ms. interruption occurs during update of the memory selection hardware, it can cause the system to hang and RAM to be overwritten. This occurs when the interruption happens in an interval when Port FF Bit 7 is zero (thus selecting the Dock Bank) and Port F4 Bit 0 is one (thus enabling Chunk 0 in the Dock Bank) and there is no memory in Chunk 0 of the Dock Bank. This can be true when there is no cartridge installed, or if the cartridge installed is an AROS. This problem is corrected by disabling or masking the interruption while updating the memory selection hardware. Figure 6.5-3 shows one implementation of this correction.

6.5.5 SAVE_STATUS and RESTORE_STATUS - The value of Port FFH which includes video mode and interruption inhibit as well as Ext. ROM/Dock Select is saved and restored as a full 8-bits. Therefore any modification of this port by code accessed between execution of SAVE_STATUS and subsequent execution of RESTORE_STATUS (e.g. via CALL__BANK or use of the Function Dispatcher) is "undone". This is one reason the Video Mode Change Service and some of the bank switching routines such as BANK_ENABLE cannot be meaningfully accessed via the Function Dispatcher.

6.5.6 CALL__BANK- Does not correctly retrieve the stack entry designating the count of parameters being passed. Memory is overwritten in the case where this count is not zero. This is corrected by setting Location 6610H = 9 (POKE 26128,9). You only need to apply the correction once; it will be duplicated in Chunk 7 if the code is relocated.

FIGURE 6.5-1

GET_STATUS CORRECTIONS

```
  LOCATION    OBJ.CODE     SOURCE STATEMENT                   COMMENTS
   (HEX)       (HEX)

                           Input:   Bank # in B

                           Output:  Bank # in B (Bank Status if Exp.Bank)
                                    Memory Selection in C
                                    (Low Active Format)

    6405       F5          GET_STATUS  PUSH  AF          Save Regs.
    6406       D5                      PUSH  DE
    6407       78                      LD    A,B         Get Bank #
    6408       FEFE                    CP    0FEH        Test if Ext.(254)
*   640A       2824                    JR    Z,GS_EXT
    640C       FEFF                    CP    0FFH        Test if Home(255)
*   640E       2837                    JR    Z,GS_HOME
    6410       A7                      AND   A            Test if Dock (0)
*   6411       2827                    JR    Z,GS_DOCK
    6413        .                       .
      .         .                       .    (Code for Expansion Banks
      .         .                       .       not applicable)
      .         .                       .
      .         .                       .
*   6430       0EFF        GS_EXT      LD    C,0FFH       Assume none
*   6432       DBFF                    IN    A,(0FFH)     Test if selected
*   6434       E680                    AND   80H
*   6436       2812                    JR    Z,GS_XT1     Not active
*   6438       1808                    JR    GETHS        Get Hor.Select
*   643A       0EFF        GS_DOCK     LD    C,0FFH       Assume none
*   643C       DBFF                    IN    A,(0FFH)     Test if selected
*   643E       E680                    AND   80H
*   6440       2008                    JR    NZ,GS_XT1     Not active
*   6442       DBF4        GETHS       IN    A,(0F4H)      Get Hor.Select Reg.
*   6444       2F                      CPL                 Invert to Low Active
*   6445       1802                    JR    GS_XT0        Exit
*   6447       DBF4        GS_HOME     IN    A,0F4H        All bits set are not
;                                                          active in Home Bank
*   6449       4F          GS_XT0      LD    C,A           Memory Select to C
    644A       D1          GS_XT1      POP   DE            Restore Regs.
    644B       F1                      POP   AF
    644C       C9                      RET                 Return
```

The asterisks mark the locations modified. See next page for list of corresponding POKE's for BASIC.

FIGURE 6.5-1

GET_STATUS CORRECTIONS

(continued)

From BASIC:

```
POKE  25610,40     (Location 640AH)
POKE  25611,36
POKE  25614,40     (Location 640EH)
POKE  25615,55
POKE  25617,40     (Location 6411H)
POKE  25618,39
POKE  25648,14     (Location 6430H)
POKE  25649,255
POKE  25650,219
POKE  25651,255
POKE  25652,230
POKE  25653,128
POKE  25654,40
POKE  25655,18
POKE  25656,24
POKE  25657,8
POKE  25658,14
POKE  25659,255
POKE  25660,219
POKE  25661,255
POKE  25662,230
POKE  25663,128
POKE  25664,32
POKE  25665,8
POKE  25666,219
POKE  25667,244
POKE  25668,47
POKE  25669,24
POKE  25670,2
POKE  25671,219
POKE  25672,244
POKE  25673,79
```

FIGURE 6.5-2

PUT_WORD CORRECTIONS

```
  LOCATION   OBJ.CODE    SOURCE STATEMENT                  COMMENTS
   (HEX)     (HEX)

                         Input:  Data in DE, Address in HL, Bank # in B

   633B      F5          PUT_WORD    PUSH  AF              Save Regs.
   633C      C5                      PUSH  BC
   633D      CD5E64                  CALL  GET_NUMBER      Bank # of Owner
*  6340      D5                      PUSH  DE              Save Data
   6341      50                      LD    D,B             Save Target Bank #
   6342      47                      LD    B,A             Bank # of Owner
   6343      CD0564                  CALL  GET_STATUS      Get Bank Status
   6346      C5                      PUSH  BC              Save It
   6347      CD4D64                  CALL  GET_CHUNK       Get Bit Map
   634A      2F                      CPL                   Set High Active
   634B      42                      LD    B,D             Target Bank # to B
   634C      4F                      LD    C,A             Memory Select Byte
   634D      CD9964                  CALL  BANK_ENABLE     Enbl.Target Mem.
*  6350      C1                      POP   BC              Saved Bank Status
*  6351      D1                      POP   DE              Saved Data
*  6352      73                      LD    (HL),E          Write LSB
*  6353      23                      INC   HL              Increment Adrs.
*  6354      72                      LD    (HL),D          Write MSB
*  6355      2B                      DEC   HL              Restore HL
   6356      CD9964                  CALL  BANK_ENABLE     Restore Bank St.
   6359      C1                      POP   BC              Restore Regs.
   635A      F1                      POP   AF
   635B      C9                      RET                   Return
```

The asterisks mark the locations modified.

From BASIC:

```
POKE 25408,213
POKE 25424,193
POKE 25425,209
POKE 25426,115
POKE 25427,35
POKE 25428,114
POKE 25429,43
```

NOTE: The corrections to GET_STATUS and BANK_ENABLE are also required.

FIGURE 6.5-3

BANK_ENABLE AND RESTORE_STATUS CORRECTIONS

				From BASIC	
BANK_ENABLE:	Location	Object Code		POKE Address	Value
	6499H	00	NOP	25753	0
	649DH	F3	DI	25757	243
	651CH	FB	EI	25884	251
RESTORE_STATUS:					
	654AH	F3	DI	25930	243
	6570H	FB	EI	25968	251

In both cases, the Disable Interrupt and Enable Interrupt are being done by deleting the preservation of the AF Registers (PUSH AF/POP AF). If your code requires AF to be saved, you must do it prior to calling either of these routines or any other system routines that use them. Note also that if you already have the interruption masked when these routines are entered, it will be enabled when they are exitted. If this proves to be a problem, replace the Enable Interruption (EI) instruction with a NOP and do the enable at a more appropriate place in your own code.

6.5.6 GET_NUMBER- Always returns the Dock Bank # for any memory enabled in the ROM Extension. Unlikely to be a problem because of limited use of the ROM Extension.

6.5.7 XFR_BYTES- Improperly passes memory select byte for the case where source and destination are in the same bank. This is corrected by setting Location 676AH = 5FH (POKE 26474,95).

6.6 GENERAL

6.6.1 Pressing ENTER multiple times with an invalid tape command on the edit line (syntax error) causes the system to reset. This is due to overflowing the Bank Status Stack in RAM Chunk 3/7 due to the multiple calls to and from the Extension ROM via the Call_Bank code without normal termination (the error causes a RESTART 8 to be executed out of Home ROM code called from the ROM Extension). It shouldn't take anybody that many tries to get a tape command right, so this is not a real problem, but you may want to keep it in mind. For any call made through the OS RAM services, you should have a corresponding return to keep the structures clean.

6.6.2 ON ERR GOTO - If a non-existent line number is specified, followed by an error, the system will hang. The ROM code is in an endless loop trying to report the absence of a valid error handler to the non-existent error handler!!! On some errors, you will get an unexpected 0 OK termination showing the line number of your Error Handler. This is because some ROM routines temporarily clear the INTPT Flag (Bit 7 of FLAGS). This flag is set to 0 when checking syntax and set to 1 when executing; if an error is detected while the Flag=0, the error handler code is branched to but is not executed.

6.6.3 Parameters to the SOUND command are not fully validated, therefore you can specify a number beyond the valid range for a given operation and not get an error, for example, you can write a value greater than 63 to the Enable Register (Reg.7), possibly changing the I/O Port used for reading the joysticks from input to output. If you specify a number larger than 255 (FFH), only the least significant byte will be actually written to the Programmable Sound Generator. Access to PSG Reg. 14 (IO-A) used for the Joysticks is also not precluded via the SOUND command.

If you experience difficulty in reading the joystick(s), do a write to PSG Reg. 7 clearing Bit 6 to

0 to guarantee that the joystick path is enabled for input (see Section 4.3). This write can be done by executing a SOUND 7,63 (or any value less than 63).

6.6.3 The INTEGER function for (-65536) gives an incorrect result of -1, and for other cases where the result should be -65536, it gives -1E-38. Since the ROM code cannot be changed, there is no correction.

6.6.4 If you respond to the SCROLL? message using multiple keys such as Cap Shift/2 or Cap Shift/Symbol Shift, you will get strange results like dumping of the Edit Line with the "C" or "E cursor, display of ROM data, or multiple scrolls. Stick to single key responses and you won't have any problems!

6.6.5 When DELETE (Cap Shift/0) is held down to do deletion of characters in the Edit Line, sometimes it outputs the DELETE Keyword instead (it should not do this in auto-repeat mode). This is especially noticeable when the input line is long. Since the ROM code cannot be corrected, you must try releasing and pressing the DELETE key at differing frequencies and you will be able to get past this "Bug".

APPENDIX A

HOME ROM MAP

```
LINK 1.7

LOAD MAP
MODULE        ORIGIN LENGTH

BLOCK           0000   0000
BASIC           0000   0227
KSCAN           0227   02D9
IO_1            0500   0502
IO_2            0A02   031B
EDIT            0D1D   0682
CHANS           139F   0142
LIST            14E1   02D4
AROS            17B5   0190
SYNTAX          1945   080A
SYNTWO          214F   04B4
GRAPHS          2603   0251
EXPRN           2854   041C
IDENT           2C70   03E9
INOUT           3059   0301
SUMS            335A   032A
CALC            3684   0437
FUNCTS          3ABB   01CE
TAPEMSG         3C89   0053
CH_SET          3D00   0300

GLOBAL       ADDRESS   MODULE

ACS             3C5E   FUNCTS
ADD             33D3   SUMS
ALNUM?          3046   IDENT
ALPHA?          304B   IDENT
ANGLE           3B9E   FUNCTS
AROS            18C6   AROS
ARRAY           37C5   CALC
AR_LN           17EA   AROS
AR_NXT          17FF   AROS
ASN             3C4E   FUNCTS
ATN             3BFD   FUNCTS
ATTBYT          0710   IO_1
BEEP            0436   KSCAN
BORDER          243E   SYNTWO
BREAK?          2009   SYNTAX
CAT             25C8   SYNTWO
CHCODE          0371   KSCAN
CHINIT          11AA   EDIT
CHK_SZ          1FBB   SYNTAX
CIRCLE          2679   GRAPHS
CLCHAN          13BE   CHANS
CLEAR           1F36   SYNTAX
CLEL            133F   EDIT
CLLHS           08A9   IO_1
CLOSE           139F   CHANS
CLPR            0A35   IO_2
CLR_BC          1F39   SYNTAX
CLS             08EA   IO_1
CLS_B           097F   IO_1
COLITM          23A6   SYNTWO
COLOUR          23DE   SYNTWO
CONT            1EE4   SYNTAX
COS             3BC5   FUNCTS
CP_BC           16E8   LIST
CTRO            371A   CALC
```

```
DATA          1E82   SYNTAX
DEF           201D   SYNTAX
DELREC        1750   LIST
DELSYM        0B7E   IO_2
DEL_DE        174D   LIST
DEL_K         0BFD   IO_2
DESLUG        0D0D   IO_2
DE_HL         1668   LIST
DIGIT?        30D9   INOUT
DIM           2FC0   IDENT
DIVIDE        356E   SUMS
DRAW          26DB   GRAPHS
DRAWLN        2813   GRAPHS
DRAW_L        2810   GRAPHS
DUMPPR        0A23   IO_2
DYADIC        1BDC   SYNTAX
ECHO          0C83   IO_2
EDIT_K        0A82   IO_2
END?          1B44   SYNTAX
ENDSTT        1AB9   SYNTAX
ENDTEM        1B4A   SYNTAX
ERASE         25D4   SYNTWO
ERR2          1B91   SYNTAX
ERR4          1FCF   SYNTAX
ERR5          07C1   IO_1
ERR6          356C   SUMS
ERRB          1F29   SYNTAX
ERRH          237E   SYNTWO
ERRO          123D   EDIT
EXCUTE        1AD8   SYNTAX
EXP           3ADF   FUNCTS
EXPRN         2854   EXPRN
FIND_L        16D6   LIST
FIND_N        2C70   IDENT
FIX_U         1F23   SYNTAX
FIX_U1        1F1E   SYNTAX
FLASHA        160D   LIST
FLOAT         3656   SUMS
FOR           1C78   SYNTAX
FORMAT        25CC   SYNTWO
FP2A          3193   INOUT
FP2BC         3160   INOUT
F_ATTR        28D7   EXPRN
F_INKY        29F2   EXPRN
F_PI          29E5   EXPRN
F_PNT         2624   GRAPHS
F_SCRN        288E   EXPRN
GETAL         17CF   AROS
GET_EL        2D54   IDENT
GET_LN        1324   EDIT
GET_XY        2660   GRAPHS
GO_SUB        1F99   SYNTAX
GR_COL        238C   SYNTWO
HIFLSH        241D   SYNTWO
INCH          11E1   EDIT
ININT         30F9   INOUT
INIT          0D31   EDIT
INPUT         222B   SYNTWO
INS1          12B8   EDIT
INSA          0AE7   IO_2
INSERT        12BB   EDIT
INT           3ACA   FUNCTS
INTDIV        3ABB   FUNCTS

INTPT?        2889   EXPRN
IN_K          0C0E   IO_2
I_SEQ         226B   SYNTWO
JUMP          1EF1   SYNTAX
K_BASE        035C   KSCAN
K_CLS         08A6   IO_1
K_DUMP        0A02   IO_2
K_LIST        1545   LIST
K_LLST        1541   LIST
K_LPR         2155   SYNTWO
K_NEW         0D1D   EDIT
K_PRIN        2159   SYNTWO
K_SCAN        02B0   KSCAN
LCU2          132D   EDIT
LDDE          313D   INOUT
LDMES         3CA8   TAPEMSG
LDTVCU        061A   IO_1
LE3           0055   BASIC
LED18         0E2F   EDIT
LED4          0E8D   EDIT
LET           2EBD   IDENT
LINENO        1768   LIST
LIST          14E1   LIST
LN            3B2E   FUNCTS
LPO           15AC   LIST
LS4           1A44   SYNTAX
LT22          1BBC   SYNTAX
MOVE          25D0   SYNTWO
MULT          3468   SUMS
NC_HL         0077   BASIC
NEGATE        382D   CALC
NEW           0D82   EDIT
NEWDEV        24D2   SYNTWO
NEXT          1D55   SYNTAX
NEXTCH        0074   BASIC
NEXT_L        165B   LIST
NOTKB?        2380   SYNTWO
NXT_HL        2C69   EXPRN
OPCHAN        1465   CHANS
OPEN          142A   CHANS
OPTNO         1C49   SYNTAX
OUTPUT        31A1   INOUT
PAEDCB        2E74   IDENT
PARP          03F3   KSCAN
PASSEM        25B9   SYNTWO
PAUSE         1FEB   SYNTAX
PHLAF         004F   BASIC
PLOT          2635   GRAPHS
PLOTBC        263E   GRAPHS
PLUGIN        0000   BASIC
POPSTR        2FAF   IDENT
PRSCAN        0A4A   IO_2
PR_CUR        162D   LIST
PR_TV2        0776   IO_1
PSHSTR        2E70   IDENT
PUT           15C9   LIST
PUTDIG        11EA   EDIT
PUTMES        073F   IO_1
PUT_BC        1788   LIST
PUT_LN        1795   LIST
PUT_SR        15A1   LIST
P_LFT         053A   IO_1
P_NL          0566   IO_1
```

```
P_RT       0554   IO_1
P_SEQ      217E   SYNTWO
RAMNO      377F   CALC
RAND       1ED4   SYNTAX
RDCH       11CF   EDIT
READ       1D97   SYNTAX
RECLEN     1720   LIST
REMGSZ     12CA   EDIT
RESET      1354   EDIT
RESTBC     1ECA   SYNTAX
RETURN     1FD4   SYNTAX
RND        29B6   EXPRN
ROOM?      3768   CALC
ROOT       3C65   FUNCTS
RSET       2454   SYNTWO
RSTSTR     13A8   CHANS
R_ATTS     0888   IO_1
SCRL       0939   IO_1
SCRMBL     2603   GRAPHS
SEARCH     136B   EDIT
SELECT     1230   EDIT
SEL_HL     1248   EDIT
SENDCH     11ED   EDIT
SENDTV     0500   IO_1
SEPRMT     3C89   TAPEMSG
SETCUR     0914   IO_1
SETTVC     0914   IO_1
SET_AT     05B2   IO_1
SHIFT      339C   SUMS
SIN        3BD0   FUNCTS
SKIP       1D28   SYNTAX
SKIPIT     2569   SYNTWO
SLICER     2E10   IDENT
SMINIT     11C1   EDIT
SOUND      2128   SYNTAX
SRCHSC     1374   EDIT
STBOOL     3926   CALC
STDE_S     314C   INOUT
STDE_U     314A   INOUT
STKUSN     3059   INOUT
STK_O      1C51   SYNTAX
STK_A      30E6   INOUT
STK_BC     30E9   INOUT
STK_M      3773   CALC
STOP       1C59   SYNTAX
STRITO     220F   SYNTWO
STTVCU     05F3   IO_1
SUB        33CE   SUMS
SUBLIN     16F0   LIST
SUBLN1     16F3   LIST
SUMSLD     3379   SUMS
SYNERR     1BED   SYNTAX
SYNTAX     1A27   SYNTAX
TAN        3BF5   FUNCTS
TC_HL      0078   BASIC
TEM1       1B82   SYNTAX
TEM10      1BEF   SYNTAX
TEM6       1BE5   SYNTAX
TEMP38     19E0   SYNTAX
TEMP39     19E1   SYNTAX
TERM?      21E7   SYNTWO
TESTO      3904   CALC
TIMES      3489   SUMS
```

```
TOKENS     0098   BASIC
TO_THE     3C6C   FUNCTS
TRUNC      35D3   SUMS
TVFUL?     0790   IO_1
TV_COL     23BB   SYNTWO
UPD_K      02E1   KSCAN
USRRET     3882   CALC
WRCH       0010   BASIC
XEY        310D   INOUT
X_CALC     134E   EDIT
X_T_HL     1363   EDIT

PROGRAM BLOCK -- 4000 BYTES
ENTRY: 0000
```

EXTENSION ROM MAP

```
LINK 1.7

LOAD MAP
MODULE        ORIGIN LENGTH

XBASIC          0000   0068
TAPE            0068   087F
INIT            08E7   04C9
CHNG_VID        0DB0   0193
PASSING         0F43   0047
BS              0F8A   001E

GLOBAL       ADDRESS   MODULE

AKEY            08AA   TAPE
BLDSCT          09F4   INIT
CALL_B          0F99   BS
CHNG_V          0E8E   CHNG_VID
CLDFIL          0E27   CHNG_VID
EXINIT          08E7   INIT
GOTO_B          0F8A   BS
LOAD            05CC   TAPE
MERGE           06E5   TAPE
OPDFIL          0DB0   CHNG_VID
PASSIN          0F43   PASSING
RD_BIT          0189   TAPE
RESSCT          0C4C   INIT
R_EDGE          018D   TAPE
R_TAPE          00FC   TAPE
SAVE            0851   TAPE
SLVM            01AB   TAPE
W_BORD          00E5   TAPE
W_TAPE          0068   TAPE

PROGRAM XBASIC -- 1000 BYTES
ENTRY: 0000

DISPATCH        1000   0624

GLOBAL       ADDRESS   MODULE

BANK_E          6499   DISPATCH
BS_MAX          6315   DISPATCH
BS_SP           65CE   DISPATCH
CALL_B          65D0   DISPATCH
CREATE          66E8   DISPATCH
DISPAT          6200   DISPATCH
GET_CH          644D   DISPATCH
GET_NU          645E   DISPATCH
GET_ST          6405   DISPATCH
GET_WO          6316   DISPATCH
GOTO_B          6572   DISPATCH
GOTO_E          6815   DISPATCH
INT             62AE   DISPATCH
```

THIS MODULE IS COPIED TO RAM 6200 (space reserved 6200-683FH). Relocated to RAM F9C0-FFFFH when second Display File is used.

```
                             ORIGIN   LENGTH

TABLES:         FIXTBL        1D00     007C

                JMPTBL        1EDC     0124

UNUSED:                       1624     06DC

                              1D7C     0160
```

```
                      420  *LIST ON
                      421  *LIST ON
                      422  *INCLUDE NEW_SYSVAR2.S
                      423  ;  HERE ARE SOME NEW SYSTEM VARIABLE DEFINITIONS
                      424  ;
                      425  ;
                      426  STKSZ           EQU     200H
                      427  SADDPT          EQU     OF5H    ;SOUND CHIP ADDR PORT
                      428  SDATPT          EQU     OF6H    ;SOUND CHIP DATA PORT
                      429  HS              EQU     40H
                      430  HS_LSN          EQU     HS
                      431  BNA             EQU     80H
                      432  HS_MSN          EQU     BNA
                      433  ABN             EQU     0A0H
                      434  HSP             EQU     ABN     ;HS' REG ADDR
                      435  STA_L           EQU     ABN
                      436  CMD             EQU     0C0H
                      437  STA_G           EQU     CMD
                      438  LOWNYB          EQU     0C000H          ;RESET NYBBLE STEERING LOGIC CMD
                      439  FREE_BYTES      EQU     32
                      440  PRM_OUT         EQU     8
                      441  HOR_SEL         EQU     10
                      442  BANK            EQU     11
                      443  UPD_K           EQU     02E1H
                      444  ;
                      445  ;
                      446
                      447          GLOBAL DISPATCH, INT, NMI, PUT_WORD, GET_WORD
                      448          GLOBAL WRITE_BS_REG, READ_BS_REG, GET_STATUS, GET_NUMBER
                      449          GLOBAL GET_CHUNK, BANK_ENABLE, GOTO_BANK, CALL_BANK
                      450          GLOBAL XFER_BYTES, BS_MAX_BANK, BS_SP
                      451          GLOBAL CREATE_BITMAP, MOVE_BYTES
                      452
                      453  ;  DISPATCH (SVC_CODE: PASSED ON STACK)
                      454  ;
                      455  ;     SVC_CODE IS A 16 BIT QUANTITY.  BIT 15 IS USED AS A JUMP FLAG:  IF
                      456  ;     SET, THE DISPATCHER WILL DO A GOTO_BANK TO THE SPECIFIED ROUTINE,
                      457  ;     OTHERWISE IT WILL DO A CALL_BANK.
                      458  ;
                      459  ;
                      460  ;
                      461  JMPTBL          EQU     1FFFH
                      462  LAST_EXT_SVC    EQU     13
                      463  LAST_RAM_SVC    EQU     24
                      464  ;
                      465  ;
                      466  ;
6200                  467                  ORG     6200H
                      468
6200   DD210000       469  DISPATCH        LD      IX, 0
6204   DD39           470                  ADD     IX, SP          ;IX = SP
6206   C5             471                  PUSH    BC              ;RESERVE A WORD ON THE STACK
6207   F5             472                  PUSH    AF              ;SAVE REGS
6208   C5             473                  PUSH    BC



6209   D5             474                  PUSH    DE
620A   E5             475                  PUSH    HL
620B   DD5E02         476                  LD      E, (IX+2)
620E   DD5603         477                  LD      D, (IX+3)       ;DE = SVC_CODE
6211   AF             478                  XOR     A
6212   CB23           479                  SLA     E
6214   CB12           480                  RL      D               ;DE = 2*DE
6216   17             481                  RLA                     ;A = JUMP FLAG
6217   210D00         482                  LD      HL, LAST_EXT_SVC
621A   CB25           483                  SLA     L
621C   CB14           484                  RL      H               ;HL = 2*HL
621E   A7             485                  AND     A
621F   ED52           486                  SBC     HL, DE          ;COMPARE HL AND DE
6221   3015           487                  JR      NC, D_EXT       ;IF DE <= HL
6223   211800         488                  LD      HL, LAST_RAM_SVC
6226   CB25           489                  SLA     L
6228   CB14           490                  RL      H
622A   A7             491                  AND     A
622B   ED52           492                  SBC     HL, DE
622D   380F           493                  JR      C, D_HOME
622F   06FF           494                  LD      B, 255          ;HERE FOR RAM-BASED SERVICES
6231   CD0564         495                  CALL    GET_STATUS      ;GET STATUS OF HOME BANK
6234   06FF           496                  LD      B, 255          ;BC = HOME BANK / HORIZ-SELECT
6236   180A           497                  JR      D_SAVE
6238   06FE           498  D_EXT           LD      B, 254          ;HERE FOR EXT. ROM BASED SERVICES
623A   0EFE           499                  LD      C, OFEH
623C   1804           500                  JR      D_SAVE
623E   06FF           501  D_HOME          LD      B, 255          ;SET BANK_ENABLE PARMS FOR HOME
6240   0E00           502                  LD      C, 0
6242   F5             503  D_SAVE          PUSH    AF
6243   C5             504                  PUSH    BC              ;SAVE JUMP FLAG AND BANK_ENABLE PARMS
6244   21FF1F         505                  LD      HL, JMPTBL      ;CALC. ADDR OF TABLE ENTRY
6247   37             506                  SCF
6248   ED52           507                  SBC     HL, DE
624A   06FE           508                  LD      B, 254
624C   CD1663         509                  CALL    GET_WORD        ;READ TABLE ENTRY
624F   EB             510                  EX      DE, HL
6250   C1             511                  POP     BC
6251   F1             512                  POP     AF              ;RESTORE JUMP FLAG, ETC.
6252   A7             513                  AND     A
6253   281F           514                  JR      Z, D_CALL
6255   DD71FE         515                  LD      (IX-2), C       ;PUT BANK# AND HOR-SEL ON STACK
6258   DD70FF         516                  LD      (IX-1), B
625B   DD6E00         517                  LD      L, (IX)         ;SAVE RET ADDR
625E   DD6601         518                  LD      H, (IX+1)
6261   DD7403         519                  LD      (IX+3), H       ;PUT RET ADDR BACK ON STACK
6264   DD7502         520                  LD      (IX+2), L
6267   DD7201         521                  LD      (IX+1), D       ;SET UP STACK FOR GOTO_BANK
626A   DD7300         522                  LD      (IX), E         ;PUT ADDR ON STACK
626D   E1             523                  POP     HL              ;RESTORE REGS
626E   D1             524                  POP     DE
626F   C1             525                  POP     BC
6270   F1             526                  POP     AF
6271   CD7265         527                  CALL    GOTO_BANK       ;HERE IF JUMP FLAG SET
```

```
 LOC    OBJ CODE M STMT SOURCE STATEMENT                          ASM 5.9

6274    DD6E00      528  D_CALL          LD      L, (IX)         ;SET UP STACK FOR CALL_BANK
6277    DD6601      529                  LD      H, (IX+1)       ;PUT RET_ADDR IN PROPER LOC
627A    E5          530                  PUSH    HL
627B    DD6E04      531                  LD      L, (IX+4)
627E    DD6605      532                  LD      H, (IX+5)
6281    DD75FE      533                  LD      (IX-2), L
6284    DD74FF      534                  LD      (IX-1), H
6287    DD6E06      535                  LD      L, (IX+6)       ;PUT PRM_OUT IN PRPER LOC
628A    DD6607      536                  LD      H, (IX+7)
628D    DD7500      537                  LD      (IX), L
6290    DD7401      538                  LD      (IX+1), H
6293    DD7102      539                  LD      (IX+2), C       ;PUT BANK #, HS ON STACK
6296    DD7003      540                  LD      (IX+3), B
6299    DD7304      541                  LD      (IX+4), E       ;PUT ADDR ON STACK
629C    DD7205      542                  LD      (IX+5), D
629F    E1          543                  POP     HL
62A0    DD7506      544                  LD      (IX+6), L
62A3    DD7407      545                  LD      (IX+7), H
62A6    E1          546                  POP     HL              ;RESTORE REGS
62A7    D1          547                  POP     DE
62A8    C1          548                  POP     BC
62A9    F1          549                  POP     AF
62AA    CDD065      550                  CALL    CALL_BANK       ;HERE IF JUMP FLAG NOT SET
62AD    C9          551                  RET
                    552  ;
                    553  ;
                    554                  ;RST 56: HERE TO SERVICE INTERRUPT BY READING KEYBOARD
                    555
62AE    F5          556  INT     PUSH AF
62AF    E5          557          PUSH HL
62B0    DDE5        558          PUSH    IX
62B2    210000      559          LD      HL, 0
62B5    39          560          ADD     HL, SP
62B6    D5          561          PUSH    DE
62B7    3A1563      562          LD      A, (BS_MAX_BANK)
62BA    5F          563          LD      E, A
62BB    1600        564          LD      D, 0
62BD    13          565          INC     DE
62BE    13          566          INC     DE
62BF    A7          567          AND     A
62C0    ED52        568          SBC     HL, DE
62C2    EB          569          EX      DE, HL
62C3    DD210000    570          LD      IX, 0
62C7    DD19        571          ADD     IX, DE
62C9    D1          572          POP     DE
62CA    DDF9        573          LD      SP, IX
62CC    CD1E65      574          CALL    SAVE_STATUS
62CF    C5          575          PUSH    BC
62D0    06FF        576          LD      B, 0FFH
62D2    CD0564      577          CALL    GET_STATUS
62D5    06FF        578          LD      B, 0FFH
62D7    79          579          LD      A, C
62D8    E6F8        580          AND     0F8H
62DA    4F          581          LD      C, A




62DB    CD9964      582           CALL     BANK_ENABLE
62DE    C1          583           POP      BC
62DF    2A785C      584           LD HL,(FRAMES)   ;NOW INCREMENT FRAME COUNTER
62E2    23          585           INC HL
62E3    22785C      586           LD (FRAMES),HL
62E6    7C          587           LD A,H
62E7    B5          588           OR L
62E8    2003        589           JR NZ,LIT3
62EA    FD3440      590           INC (IY-Y+FRAME2)
62ED    C5          591  LIT3:    PUSH BC
62EE    D5          592           PUSH DE
62EF    CDE102      593           CALL     UPD_K
62F2    D1          594           POP DE
62F3    C1          595           POP BC
                    596  PHLAF:            ;JUMP HERE TO POP HL, POP AF, ENABLE INTERRUPTS & RETURN
62F4    DD210000    597           LD       IX, 0
62F8    DD39        598           ADD      IX, SP
62FA    CD4A65      599           CALL     RESTORE_STATUS
62FD    DD23        600           INC      IX
62FF    DDF9        601           LD       SP, IX
6301    DDE1        602           POP      IX
6303    E1          603           POP HL
6304    F1          604           POP AF
6305    FB          605           EI
6306    C9          606           RET
                    607
                    608                    ;HERE TO SERVICE NON-MASKABLE INTERRUPT
                    609                    ;IF (NMIADD) = 0 THEN RETURNS STRAIGHT AWAY;
                    610                    ;ELSE, JUMPS TO (NMIADD) WITH HL (ON TOP), AF & RETN ADDR ON
                    611                    ;     THE STACK.
6307    F5          612  NMI      PUSH AF
6308    E5          613           PUSH HL
6309    2AB05C      614           LD HL,(NMIADD)
630C    7C          615           LD A,H
630D    B5          616           OR L
630E    2001        617           JR NZ,LNI3        ;IF NO USER-SUPPLIED SERVICE ROUTINE
6310    E9          618           JP (HL)
                    619
6311    E1          620  LNI3:    POP HL
6312    F1          621           POP AF
6313    ED45        622           RETN
                    623  ;
                    624  ;
6315                625  BS_MAX_BANK      DEFS    1         ;THIS IS A COPY OF MAX_BANK
                    626  ;
                    627  ;   GET_WORD (ADDR: HL, BANK:B; WORD:HL)
                    628  ;
                    629  ;
6316    F5          630  GET_WORD         PUSH     AF                 ;SAVE REGS
6317    C5          631                   PUSH     BC
6318    D5          632                   PUSH     DE
6319    CD5E64      633                   CALL     GET_NUMBER         ;GET BANK # OF OWNER OF ADDR
631C    F5          634                   PUSH     AF
631D    50          635                   LD       D, B
```

```
LOC   OBJ CODE M STMT SOURCE STATEMENT                                   ASM 5.9

631E  47            636                LD      B, A
631F  CD0564        637                CALL    GET_STATUS      ;GET STATUS OF OWNER
6322  C5            638                PUSH    BC
6323  CD4D64        639                CALL    GET_CHUNK       ;SET HS FOR GETTING AT ADDR
6326  2F            640                CPL                     ;PUT IN ACTIVE LOW FORMAT
6327  42            641                LD      B, D
6328  4F            642                LD      C, A
6329  CD9964        643                CALL    BANK_ENABLE     ;ENABLE ADDR
632C  5E            644                LD      E, (HL)         ;READ THE WORD
632D  23            645                INC     HL
632E  56            646                LD      D, (HL)
632F  2B            647                DEC     HL
6330  EB            648                EX      DE, HL
6331  C1            649                POP     BC
6332  F1            650                POP     AF
6333  47            651                LD      B, A
6334  CD9964        652                CALL    BANK_ENABLE     ;REENABLE OWNER OF ADDR
6337  D1            653                POP     DE              ;RESTORE REGS
6338  C1            654                POP     BC
6339  F1            655                POP     AF
633A  C9            656                RET
                    657  ;
                    658  ;
                    659  ;   PUT_WORD (WORD: DE, ADDR: HL, BANK: B)
                    660  ;
                    661  ;
633B  F5            662  PUT_WORD      PUSH    AF              ;SAVE REGS
633C  C5            663                PUSH    BC
633D  CD5E64        664                CALL    GET_NUMBER      ;GET BANK # OF OWNER OF ADDR
6340  F5            665                PUSH    AF
6341  50            666                LD      D, B
6342  47            667                LD      B, A
6343  CD0564        668                CALL    GET_STATUS      ;GET STATUS OF OWNER
6346  C5            669                PUSH    BC
6347  CD4D64        670                CALL    GET_CHUNK       ;SET HS FOR GETTING AT ADDR
634A  2F            671                CPL                     ;PUT IN ACTIVE LOW FORMAT
634B  42            672                LD      B, D
634C  4F            673                LD      C, A
634D  CD9964        674                CALL    BANK_ENABLE     ;ENABLE ADDR
6350  73            675                LD      (HL), E         ;WRITE THE WORD
6351  23            676                INC     HL
6352  72            677                LD      (HL), D
6353  2B            678                DEC     HL
6354  C1            679                POP     BC
6355  F1            680                POP     AF
6356  CD9964        681                CALL    BANK_ENABLE     ;REENABLE OWNER OF ADDR
6359  C1            682                POP     BC
635A  F1            683                POP     AF
635B  C9            684                RET
                    685  ;
                    686  ;
                    687  ;   WRITE_BS_REG (REG_ADDR: D, REG_DATA: E)
                    688  ;
                    689  ;



635C  F5            690  WRITE_BS_REG  PUSH    AF              ;SAVE REGISTERS
635D  C5            691                PUSH    BC
635E  E5            692                PUSH    HL
635F  62            693                LD      H, D
6360  2E00          694                LD      L, 0            ;HL = MEMORY MAPPED ADDR
6362  3A00C0        695                LD      A, (LOWNYB)     ;SAVE (0E000H)
6365  F5            696                PUSH    AF
6366  7E            697                LD      A, (HL)         ;SAVE (HL)
6367  F5            698                PUSH    AF
6368  3E07          699                LD      A, 7
636A  D3F5          700                OUT     (SADDPT), A     ;SAVE VALUES OF SOUND REGS 7 AND E
636C  DBF6          701                IN      A, (SDATPT)
636E  47            702                LD      B, A
636F  3E0E          703                LD      A, 0EH
6371  D3F5          704                OUT     (SADDPT), A
6373  DBF6          705                IN      A, (SDATPT)
6375  4F            706                LD      C, A
6376  3E07          707                LD      A, 7            ;SET IOA CHANNEL TO OUTPUT
6378  D3F5          708                OUT     (SADDPT), A
637A  3E40          709                LD      A, 40H
637C  D3F6          710                OUT     (SDATPT), A
637E  3E0E          711                LD      A, 0EH
6380  D3F5          712                OUT     (SADDPT), A
6382  AF            713                XOR     A
6383  D3F6          714                OUT     (SDATPT), A
6385  3E02          715                LD      A, 2
6387  3200C0        716                LD      (LOWNYB), A     ;RESET NYBBLE STEERING LOGIC
638A  7B            717                LD      A, E
638B  77            718                LD      (HL), A         ;WRITE LSN OF DATA
638C  CB2F          719                SRA     A
638E  CB2F          720                SRA     A
6390  CB2F          721                SRA     A
6392  CB2F          722                SRA     A
6394  77            723                LD      (HL), A         ;WRITE MSN OF DATA
6395  3E07          724                LD      A, 7            ;RESTORE SOUND REGS
6397  D3F5          725                OUT     (SADDPT), A
6399  78            726                LD      A, B
639A  D3F6          727                OUT     (SDATPT), A
639C  3E0E          728                LD      A, 0EH
639E  D3F5          729                OUT     (SADDPT), A
63A0  79            730                LD      A, C
63A1  D3F6          731                OUT     (SDATPT), A
63A3  F1            732                POP     AF
63A4  77            733                LD      (HL), A         ;RESTORE (HL)
63A5  F1            734                POP     AF
63A6  3200C0        735                LD      (LOWNYB), A     ;RESTORE (0E000H)
63A9  E1            736                POP     HL              ;RESTORE REGISTERS
63AA  C1            737                POP     BC
63AB  F1            738                POP     AF
63AC  C9            739                RET
                    740  ;
                    741  ;
                    742  ;   READ_BS_REG (LSN_ADDR: D, MSN_ADDR: E; BYTE_DATA: C)
                    743  ;
```

```
                  744  ;
63AD   F5         745  READ_BS_REG     PUSH   AF              ;SAVE REGISTERS
63AE   C5         746                  PUSH   BC
63AF   E5         747                  PUSH   HL
63B0   62         748                  LD     H, D
63B1   2E00       749                  LD     L, 0            ;HL = MEMORY MAPPED ADDR
63B3   3A00C0     750                  LD     A, (LOWNYB)     ;SAVE (0E000H)
63B6   F5         751                  PUSH   AF
63B7   7E         752                  LD     A, (HL)         ;SAVE (HL)
63B8   F5         753                  PUSH   AF
63B9   3E07       754                  LD     A, 7
63BB   D3F5       755                  OUT    (SADDPT), A     ;SAVE VALUES OF SOUND REGS 7 AND E
63BD   DBF6       756                  IN     A, (SDATPT)
63BF   47         757                  LD     B, A
63C0   3E0E       758                  LD     A, 0EH
63C2   D3F5       759                  OUT    (SADDPT), A
63C4   DBF6       760                  IN     A, (SDATPT)
63C6   4F         761                  LD     C, A
63C7   C5         762                  PUSH   BC
63C8   3E07       763                  LD     A, 7            ;SET IOA CHANNEL TO OUTPUT
63CA   D3F5       764                  OUT    (SADDPT), A
63CC   3E40       765                  LD     A, 40H
63CE   D3F6       766                  OUT    (SDATPT), A
63D0   3E0E       767                  LD     A, 0EH
63D2   D3F5       768                  OUT    (SADDPT), A
63D4   AF         769                  XOR    A
63D5   D3F6       770                  OUT    (SDATPT), A
63D7   3E02       771                  LD     A, 2
63D9   3200C0     772                  LD     (LOWNYB), A     ;RESET NYBBLE STEERING LOGIC
63DC   7E         773                  LD     A, (HL)         ;READ LSN OF DATA
63DD   E60F       774                  AND    0FH
63DF   4F         775                  LD     C, A
63E0   63         776                  LD     H, E
63E1   7E         777                  LD     A, (HL)         ;READ MSN OF DATA
63E2   CB27       778                  SLA    A
63E4   CB27       779                  SLA    A
63E6   CB27       780                  SLA    A
63E8   CB27       781                  SLA    A
63EA   B1         782                  OR     C
63EB   5F         783                  LD     E, A            ;RETURN BYTE DATA IN E
63EC   C1         784                  POP    BC
63ED   3E07       785                  LD     A, 7            ;RESTORE SOUND REGS
63EF   D3F5       786                  OUT    (SADDPT), A
63F1   78         787                  LD     A, B
63F2   D3F6       788                  OUT    (SDATPT), A
63F4   3E0E       789                  LD     A, 0EH
63F6   D3F5       790                  OUT    (SADDPT), A
63F8   79         791                  LD     A, C
63F9   D3F6       792                  OUT    (SDATPT), A
63FB   F1         793                  POP    AF
63FC   77         794                  LD     (HL), A         ;RESTORE (HL)
63FD   F1         795                  POP    AF
63FE   3200C0     796                  LD     (LOWNYB), A     ;RESTORE (0E000H)
6401   E1         797                  POP    HL              ;RESTORE REGISTERS



6402   C1         798                  POP    BC
6403   F1         799                  POP    AF
6404   C9         800                  RET
                  801  ;
                  802  ;
                  803  ;  GET_BANK_STATUS (BANK: B; STATUS : B, HORIZONTAL_SELECT: C)
                  804  ;
                  805  ;
6405   F5         806  GET_STATUS      PUSH   AF              ;SAVE SAVE REGS
6406   D5         807                  PUSH   DE
6407   78         808                  LD     A, B
6408   FEFE       809                  CP     0FEH
640A   282E       810                  JR     Z, GS_EXT       ;IF BANK = 254
640C   FEFF       811                  CP     0FFH
640E   281D       812                  JR     Z, GS_HOME      ;IF BANK = 255
6410   A7         813                  AND    A
6411   281F       814                  JR     Z, GS_DOCK      ;IF BANK = 0
6413   1680       815                  LD     D, BNA          ;HERE IF EXP. BANK
6415   58         816                  LD     E, B
6416   CD5C63     817                  CALL   WRITE_BS_REG
6419   1640       818                  LD     D, HS_LSN
641B   1E80       819                  LD     E, HS_MSN
641D   CDAD63     820                  CALL   READ_BS_REG     ;READ HS
6420   7B         821                  LD     A, E
6421   2F         822                  CPL
6422   4F         823                  LD     C, A
6423   16A0       824                  LD     D, STA_L
6425   1EC0       825                  LD     E, STA_G
6427   CDAD63     826                  CALL   READ_BS_REG     ;READ STATUS NYBBLES
642A   43         827                  LD     B, E
642B   181D       828                  JR     GS_EXIT
642D   010000     829  GS_HOME         LD     BC, 0           ;RETURN 0 FOR HOME BANK STATUS
6430   1818       830                  JR     GS_EXIT
6432   DBF4       831  GS_DOCK         IN     A, (DKHSPT)     ;RETURN DOCK BANK STATUS
6434   2F         832                  CPL
6435   47         833                  LD     B, A
6436   0E00       834                  LD     C, 0
6438   1810       835                  JR     GS_EXIT
643A   DBFF       836  GS_EXT          IN     A, (HREXPT)
643C   E680       837                  AND    80H             ;CLEAR ALL BITS EXCEPT BIT 7
643E   2F         838                  CPL
643F   07         839                  RLCA                   ;PUT ACTIVE LOW BIT IN BIT ZERO
6440   47         840                  LD     B, A
6441   DBF4       841                  IN     A, (DKHSPT)
6443   2F         842                  CPL
6444   E601       843                  AND    1
6446   B0         844                  OR     B
6447   47         845                  LD     B, A
6448   0E00       846                  LD     C, 0
644A   D1         847  GS_EXIT         POP    DE              ;RESTORE D, C
644B   F1         848                  POP    AF
644C   C9         849                  RET
                  850  ;
                  851  ;
```

```
                    852  ;  GET_CHUNK (ADDR: HL: MASK: A)
                    853  ;
                    854  ;
644D   C5           855  GET_CHUNK          PUSH    BC                  ;SAVE B
644E   7C           856                     LD      A, H                ;CHUNK NUMBER = HIGH 3 BITS OF
644F   0605         857                     LD      B, 5                ; H SO SHIFT H RIGHT 5 BITS
6451   CB3F         858  GC_SHIFT           SRL     A
6453   10FC         859                     DJNZ    GC_SHIFT
6455   3C           860                     INC     A                   ;CREATE MASK BY ROLLING A 1
6456   47           861                     LD      B, A                ; LEFT CHUNK NUMBER+1 TIMES.
6457   AF           862                     XOR     A                   ; THE 1 COMES FROM THE CARRY
6458   37           863                     SCF                         ; FLAG
6459   17           864  GC_ROLL            RLA
645A   10FD         865                     DJNZ    GC_ROLL
645C   C1           866                     POP     BC                  ;RESTORE B
645D   C9           867                     RET
                    868  ;
                    869  ;
                    870  ;  GET_BANK_NUMBER (ADDR: HL; BANK_NUMBER: A)
                    871  ;
                    872  ;
645E   C5           873  GET_NUMBER         PUSH    BC                  ;SAVE REGS
645F   D5           874                     PUSH    DE
6460   CD4D64       875                     CALL    GET_CHUNK
6463   4F           876                     LD      C, A
6464   3A1563       877                     LD      A, (BS_MAX_BANK);GET LARGEST BANK NUMBER
6467   A7           878                     AND     A
6468   280A         879                     JR      Z, GN_RD_DOCK       ;IF NO EXP. BANKS
646A   47           880                     LD      B, A
646B   58           881  GN_CHECK           LD      E, B                ;SEARCH ALL EXP. BANKS
646C   CD0564       882                     CALL    GET_STATUS
646F   A1           883                     AND     C
6470   2823         884                     JR      Z, GN_EXP           ;FOUND THE CHUNK, SO EXIT LOOP
6472   10F7         885                     DJNZ    GN_CHECK
6474   DBF4         886  GN_RD_DOCK         IN      A, (DKHSPT)         ;NOT IN EXP. BANKS, SO CHECK DOCK
6476   2F           887                     CPL
6477   A1           888                     AND     C
6478   2818         889                     JR      Z, GN_DOCK
647A   0D           890                     DEC     C                   ;IF CHUNK > 1, THEN CAN'T BE IN EXT.
647B   2011         891                     JR      NZ, GN_HOME
647D   DBFF         892                     IN      A, (HREXPT)         ;CHECK IF IN EXT. BANK
647F   E680         893                     AND     80H
6481   57           894                     LD      D, A
6482   DBF4         895                     IN      A, (DKHSPT)
6484   E601         896                     AND     1
6486   0F           897                     RRCA
6487   A2           898                     AND     D
6488   2804         899                     JR      Z, GN_HOME          ;NOT IN EXT. BANK
648A   3EFE         900                     LD      A, 0FEH             ;IN EXT. BANK, SO RETURN 254
648C   1808         901                     JR      GN_EXIT
648E   3EFF         902  GN_HOME LD         A, 0FFH         ;IN HOME BANK, SO RETURN 255
6490   1804         903                     JR      GN_EXIT
6492   AF           904  GN_DOCK            XOR     A                   ;FOUND CHUNK IN DOCK, SO RETURN 0
6493   1801         905                     JR      GN_EXIT
```

```
6495   78           906  GN_EXP             LD      A, B                ;RETURN EXP. BANK NUMBER
6496   D1           907  GN_EXIT            POP     DE                  ;RESTORE REGS
6497   C1           908                     POP     BC
6498   C9           909                     RET
                    910  ;
                    911  ;
                    912  ;  BANK_ENABLE (BANK: B, HORIZONTAL_SELECT: C)
                    913  ;
                    914  ;
6499   F5           915  BANK_ENABLE        PUSH    AF                  ;SAVE REGISTERS
649A   C5           916                     PUSH    BC
649B   D5           917                     PUSH    DE
649C   E5           918                     PUSH    HL
649D   60           919                     LD      H, B
649E   3A1563       920                     LD      A, (BS_MAX_BANK);GET LARGEST BANK NUMBER
64A1   A7           921                     AND     A
64A2   2811         922                     JR      Z, BE_SKIP          ;IF NO EXP. BANKS
64A4   1680         923                     LD      D, BNA
64A6   1E00         924                     LD      E, 0
64A8   CD5C63       925                     CALL    WRITE_BS_REG
64AB   16A0         926                     LD      D, HSP
64AD   F5           927                     PUSH    AF
64AE   79           928                     LD      A, C
64AF   2F           929                     CPL
64B0   5F           930                     LD      E, A
64B1   F1           931                     POP     AF
64B2   CD5C63       932                     CALL    WRITE_BS_REG        ;TURN OFF APPROPRIATE BITS OF
                    933                                                 ; ALL EXP. BANKS
64B5   78           934  BE_SKIP            LD      A, B
64B6   A7           935                     AND     A
64B7   2011         936                     JR      NZ, BE_NTDOCK
64B9   79           937                     LD      A,C
64BA   FEFF         938                     CP      0FFH
64BC   2806         939                     JR      Z, BE_EXT_OK
64BE   DBFF         940                     IN      A, (HREXPT)         ;HERE FOR DOCK
64C0   CBBF         941                     RES     7, A
64C2   D3FF         942                     OUT     (HREXPT), A
64C4   79           943  BE_EXT_OK          LD      A, C
64C5   2F           944                     CPL
64C6   D3F4         945                     OUT     (DKHSPT), A         ;ENABLE DOCK
64C8   184F         946                     JR      BE_EXIT
64CA   78           947  BE_NTDOCK          LD      A, B                ;CHECK IF EXT.
64CB   FEFE         948                     CP      0FEH
64CD   201D         949                     JR      NZ, BE_NTEXT
64CF   DBFF         950                     IN      A, (HREXPT)         ;HERE FOR EXT.
64D1   17           951                     RLA
64D2   CB19         952                     RR      C
64D4   3F           953                     CCF
64D5   1F           954                     RRA
64D6   D3FF         955                     OUT     (HREXPT), A
64D8   CB7F         956                     BIT     7, A
64DA   2008         957                     JR      NZ, BE_SET
64DC   DBF4         958                     IN      A, (DKHSPT)
64DE   CB87         959                     RES     0, A
```

```
64E0   D3F4       960                OUT     (DKHSPT), A
64E2   1835       961                JR      BE_EXIT
64E4   DBF4       962  BE_SET        IN      A, (DKHSPT)
64E6   CBC7       963                SET     0, A
64E8   D3F4       964                OUT     (DKHSPT), A
64EA   182D       965                JR      BE_EXIT
64EC   DBF4       966  BE_NTEXT      IN      A, (DKHSPT)      ;DISABLE DOCK
64EE   2F         967                CPL
64EF   5F         968                LD      E, A
64F0   79         969                LD      A, C
64F1   2F         970                CPL
64F2   B3         971                OR      E
64F3   2F         972                CPL
64F4   D3F4       973                OUT     (DKHSPT), A
64F6   CB41       974                BIT     0, C
64F8   200C       975                JR      NZ, BE_CHK_HOME
64FA   DBFF       976                IN      A, (HREXPT)      ;DISABLE EXT.
64FC   CBBF       977                RES     7, A
64FE   D3FF       978                OUT     (HREXPT), A
6500   DBF4       979                IN      A, (DKHSPT)
6502   CB87       980                RES     0, A
6504   D3F4       981                OUT     (DKHSPT), A
6506   78         982  BE_CHK_HOME   LD      A, B             ;CHECK IF HOME
6507   FEFF       983                CP      0FFH
6509   280E       984                JR      Z, BE_EXIT       ;IS HOME, SO DONE
650B   1680       985                LD      D, BNA           ;WRITE NEW EXP. BANK STATUS
650D   58         986                LD      E, B
650E   CD5C63     987                CALL    WRITE_BS_REG
6511   1640       988                LD      D, HS
6513   79         989                LD      A, C
6514   2F         990                CPL
6515   5F         991                LD      E, A
6516   CD5C63     992                CALL    WRITE_BS_REG
6519   E1         993  BE_EXIT       POP     HL               ;RESTORE REGISTERS
651A   D1         994                POP     DE
651B   C1         995                POP     BC
651C   F1         996                POP     AF
651D   C9         997                RET
                  998  ;
                  999  ;
                 1000  ;   SAVE_BANK_STATUSES (STATUS_ADDR: IX)
                 1001  ;
                 1002  ;          PUSHES THE STATUS OF ALL BANKS ON THE STACK
                 1003  ;
                 1004  ;
651E   F5        1005  SAVE_STATUS   PUSH    AF               ;SAVE REGS
651F   C5        1006                PUSH    BC
6520   D5        1007                PUSH    DE
6521   DBFF      1008                IN      A, (HREXPT)      ;SAVE EXT. BANK STATUS
6523   00        1009                NOP                      ;LEAVE BITS 0-6 ALONE! NOPS PUT IN
6524   00        1010                NOP                      ; TO KEEP ADDRS THE SAME
6525   DD7700    1011                LD      (IX), A
6528   DD23      1012                INC     IX
652A   DBF4      1013                IN      A, (DKHSPT)      ;GET DOCK BANK STATUS




652C   DD7700    1014                LD      (IX), A
652F   DD23      1015                INC     IX
6531   3A1563    1016                LD      A, (BS_MAX_BANK);GET NUMBER OF BANKS
6534   A7        1017                AND     A
6535   280D      1018                JR      Z, SS_EXIT
6537   47        1019                LD      B, A             ;SET UP COUNTER
6538   58        1020  SS_LOOP       LD      E, B             ;BANK NUMBER INTO E
6539   CD0564    1021                CALL    GET_STATUS       ;GET BANK STATUS OF BANK #B
653C   DD7100    1022                LD      (IX), C
653F   DD23      1023                INC     IX
6541   43        1024                LD      B, E
6542   10F4      1025                DJNZ    SS_LOOP          ;DO FOR ALL
6544   DD2B      1026  SS_EXIT       DEC     IX
6546   D1        1027                POP     DE               ;RESTORE REGS
6547   C1        1028                POP     BC
6548   F1        1029                POP     AF
6549   C9        1030                RET
                 1031  ;
                 1032  ;
                 1033  ;  RESTORE_BANK_STATUSES (STATUS_ADDR: IX)
                 1034  ;
                 1035  ;          RESTORES BANK STATUS TO ALL BANKS
                 1036  ;
                 1037  ;
654A   F5        1038  RESTORE_STATUS PUSH   AF               ;SAVE REGS
654B   C5        1039                PUSH    BC
654C   D5        1040                PUSH    DE
654D   DD7E00    1041                LD      A, (IX)          ;GET EXT. ROM STATUS
6550   D3FF      1042                OUT     (HREXPT), A
6552   DD23      1043                INC     IX
6554   DD7E00    1044                LD      A, (IX)          ;GET DOCK BANK STATUS
6557   D3F4      1045                OUT     (DKHSPT), A
6559   DD23      1046                INC     IX
655B   3A1563    1047                LD      A, (BS_MAX_BANK);GET NUMBER OF BANKS
655E   A7        1048                AND     A
655F   280B      1049                JR      Z, RS_EXIT
6561   47        1050                LD      B, A             ;SET UP COUNTER
6562   DD4E00    1051  RS_LOOP       LD      C, (IX)
6565   CD9964    1052                CALL    BANK_ENABLE      ;WRITE BANK STATUS OF BANK #B
6568   DD23      1053                INC     IX
656A   10F6      1054                DJNZ    RS_LOOP          ;DO FOR ALL
656C   DD2B      1055  RS_EXIT       DEC     IX
656E   D1        1056                POP     DE               ;RESTORE REGS
656F   C1        1057                POP     BC
6570   F1        1058                POP     AF
6571   C9        1059                RET
                 1060  ;
                 1061  ;
                 1062  ;   GOTO_BANK (BANK, HORIZONTAL_SELECT, ADDR: PASSED ON STACK)
                 1063  ;
                 1064  ;
                 1065  ;          SETS UP THE DESTINATION BANK AND JUMPS WITHOUT RETURN TO ADDRESS
                 1066  ;       IN BANK.
                 1067  ;
```

```
                   1068  ;
6572  DD210000     1069  GOTO_BANK        LD      IX, 0            ;SET IX TO SP
6576  DD39         1070                   ADD     IX, SP
6578  DD7100       1071                   LD      (IX), C          ;SAVE BC AND TRASH RET ADDR
657B  DD7001       1072                   LD      (IX+1), B
657E  DD4E02       1073                   LD      C, (IX+2)        ;GET PARMS FOR BANK_ENABLE
6581  DD4603       1074                   LD      B, (IX+3)
6584  CD9964       1075                   CALL    BANK_ENABLE
6587  C1           1076                   POP     BC               ;RESTORE BC
6588  DDE1         1077                   POP     IX               ;TRASH PARMS TO GOTO_BANK
658A  DDE1         1078                   POP     IX               ;GET ADDR
658C  DDE9         1079  JMPIX            JP      (IX)
                   1080  ;
                   1081  ;
                   1082  ;  CALL_BANK (ADDR, BANK, HORIZONTAL_SELECT, PRM_OUT, PRM_IN)
                   1083  ;    ALL INPUT PARAMETERS ARE PUSHED ON THE STACK
                   1084  ;
                   1085  ;  CLOBBERS IX
                   1086  ;
                   1087  ;
                   1088  ;          SETS UP THE BANK AND MAKES A JUMP WITH RETURN ADDRESS TO ADDRESS
                   1089  ;        IN BANK.
                   1090  ;
                   1091  ;
658E               1092  BS_STACK         DEFS    64
65CE               1093  BS_SP            DEFS    2
                   1094  ;
                   1095  ;
65D0  E3           1096  CALL_BANK        EX      (SP), HL         ;GET RET ADDR
65D1  DD2ACE65     1097                   LD      IX, (BS_SP)
65D5  DD2B         1098                   DEC     IX
65D7  DD7400       1099                   LD      (IX), H
65DA  DD2B         1100                   DEC     IX
65DC  DD7500       1101                   LD      (IX), L          ;PUSH HL ON BS_STACK
65DF  E1           1102                   POP     HL
65E0  E3           1103                   EX      (SP), HL         ;GET PRM_IN
65E1  DD2B         1104                   DEC     IX
65E3  DD7400       1105                   LD      (IX), H
65E6  DD2B         1106                   DEC     IX
65E8  DD7500       1107                   LD      (IX), L          ;PUSH PRM_IN ON BS_STACK
65EB  DD22CE65     1108                   LD      (BS_SP), IX      ;UPDATE BS_SP
65EF  D5           1109                   PUSH    DE               ;SAVE REGS
65F0  C5           1110                   PUSH    BC
65F1  F5           1111                   PUSH    AF
65F2  210000       1112                   LD      HL, 0
65F5  39           1113                   ADD     HL, SP           ;HL = SP
65F6  54           1114                   LD      D, H
65F7  5D           1115                   LD      E, L
65F8  3A1563       1116                   LD      A, (BS_MAX_BANK)
65FB  4F           1117                   LD      C, A
65FC  0600         1118                   LD      B, 0
65FE  03           1119                   INC     BC
65FF  03           1120                   INC     BC               ;BC = MAX_BANK + 2
6600  A7           1121                   AND     A

6601  ED42         1122                   SBC     HL, BC
6603  F9           1123                   LD      SP, HL
6604  DD210000     1124                   LD      IX, 0
6608  DD19         1125                   ADD     IX, DE
660A  EB           1126                   EX      DE, HL           ;DE, HL NOW CONTAIN DEST, SRC
                   1127                                            ; POINTERS FOR A BLOCK MOVE
660B  DD4E08       1128                   LD      C, (IX+PRM_OUT)
660E  DD4608       1129                   LD      B, (IX+PRM_OUT)
6611  3E0E         1130                   LD      A, 14
6613  81           1131                   ADD     A, C
6614  4F           1132                   LD      C, A
6615  3001         1133                   JR      NC, CB_NC1       ;BC = PRM_OUT + 14
6617  04           1134                   INC     B
6618  EDB0         1135  CB_NC1           LDIR                     ;MAKE ROOM FOR BANK STATUS
661A  D5           1136                   PUSH    DE
661B  DDE1         1137                   POP     IX               ;IX = DE
661D  CD1E65       1138                   CALL    SAVE_STATUS
6620  DD210000     1139                   LD      IX, 0
6624  DD39         1140                   ADD     IX, SP
6626  DD4E0A       1141                   LD      C, (IX+HOR_SEL) ;GET PARMS FOR BANK_ENABLE
6629  DD460B       1142                   LD      B, (IX+BANK)
662C  CD9964       1143                   CALL    BANK_ENABLE      ;ENABLE DESTINATION BANK
662F  F1           1144                   POP     AF               ;RESTORE REGS
6630  C1           1145                   POP     BC
6631  D1           1146                   POP     DE
6632  E1           1147                   POP     HL
6633  DDE1         1148                   POP     IX               ;TRASH PARMS TO CALL_BANK AND GET ADDR
6635  DDE1         1149                   POP     IX
6637  DDE1         1150                   POP     IX
6639  CD8C65       1151                   CALL    JMPIX            ;CALL ADDRESS IN IX
663C  F5           1152                   PUSH    AF               ;SAVE REGS
663D  C5           1153                   PUSH    BC
663E  D5           1154                   PUSH    DE
663F  E5           1155                   PUSH    HL
6640  DD2ACE65     1156                   LD      IX, (BS_SP)
6644  DD4E00       1157                   LD      C, (IX)
6647  DD23         1158                   INC     IX
6649  DD4600       1159                   LD      B, (IX)
664C  DD23         1160                   INC     IX               ;POP PRM_IN OFF BS_STACK
664E  DD22CE65     1161                   LD      (BS_SP), IX      ;UPDATE BS_SP
6652  DD210000     1162                   LD      IX, 0
6656  DD39         1163                   ADD     IX, SP
6658  3E08         1164                   LD      A, 8
665A  81           1165                   ADD     A, C
665B  4F           1166                   LD      C, A
665C  3001         1167                   JR      NC, CB_NC2       ;BC = PRM_IN + 8
665E  04           1168                   INC     B
665F  DD09         1169  CB_NC2           ADD     IX, BC           ;IX = SP + PRM_IN + 8
6661  DDE5         1170                   PUSH    IX
6663  E1           1171                   POP     HL               ;HL = IX
6664  2B           1172                   DEC     HL               ;HL = SRC POINTER FOR BLOCK MOVE
6665  CD4A65       1173                   CALL    RESTORE_STATUS   ;RESTORE STATUS OF ALL BANKS
6668  DDE5         1174                   PUSH    IX
666A  D1           1175                   POP     DE               ;DE = DEST POINTER FOR BLOCK MOVE
```

```
666B   EDB8      1176                LDDR                      ;DEALLOCATE SPACE FOR BANK STATUS
666D   EB        1177                EX      DE, HL
666E   23        1178                INC     HL
666F   F9        1179                LD      SP, HL            ;RESTORE SP
6670   DD2ACE65  1180                LD      IX, (BS_SP)
6674   DD4E00    1181                LD      C, (IX)
6677   DD23      1182                INC     IX
6679   DD4600    1183                LD      B, (IX)
667C   DD23      1184                INC     IX                ;POP RET ADDR OFF BS_STACK
667E   DD22CE65  1185                LD      (BS_SP), IX       ;UPDATE BS_SP
6682   C5        1186                PUSH    BC
6683   DDE1      1187                POP     IX
6685   E1        1188                POP     HL                ;RESTORE REGS
6686   D1        1189                POP     DE
6687   C1        1190                POP     BC
6688   F1        1191                POP     AF
6689   DDE5      1192                PUSH    IX                ;PUT RET ADDR ON STACK
668B   C9        1193                RET
                 1194  ;
                 1195  ;
                 1196  ;  HERE ARE SOME EQUATES WHICH ARE USED BY XFER_BYTES AND THE ROUTINES IT
                 1197  ;  CALLS.
                 1198  ;
                 1199  DIRECTION     EQU     0
                 1200  BUF_PTR       EQU     0
                 1201  LENGTH        EQU     2
                 1202  DEST_ADDR     EQU     4
                 1203  SRC_ADDR      EQU     6
                 1204  DEST_BANK     EQU     8
                 1205  SRC_BANK      EQU     9
                 1206  ;
                 1207  ;
                 1208  ;  MOVE_BYTES (BYTES_TO_MOVE: DE, DIRECTION : A)
                 1209  ;
                 1210  ;
668C   E5        1211  MOVE_BYTES:   PUSH    HL                ;SAVE REGISTERS
668D   D5        1212                PUSH    DE
668E   C5        1213                PUSH    BC
668F   48        1214                LD      C, B
6690   DD4609    1215                LD      B, (IX+SRC_BANK)
6693   CD9964    1216                CALL    BANK_ENABLE       ;SELECT SRC BANK
6696   42        1217                LD      B, D              ;MOVE FROM SRC TO STACK
6697   4B        1218                LD      C, E
6698   DD5E00    1219                LD      E, (IX+BUF_PTR)
669B   DD5601    1220                LD      D, (IX+BUF_PTR+1)
669E   DD6E06    1221                LD      L, (IX+SRC_ADDR)
66A1   DD6607    1222                LD      H, (IX+SRC_ADDR+1)
66A4   07        1223                RLCA
66A5   0F        1224                RRCA
66A6   3805      1225                JR      C, MB_RV1         ;IF A < 0
66A8   EDB0      1226                LDIR
66AA   09        1227                ADD     HL, BC            ;INCREMENT POINTER
66AB   1805      1228                JR      MB_UP1
66AD   EDB8      1229  MB_RV1        LDDR
```

```
66AF   A7        1230                AND     A
66B0   ED42      1231                SBC     HL, BC            ;DECREMENT POINTER
66B2   DD7506    1232  MB_UP1        LD      (IX+SRC_ADDR), L  ;STORE NEW POINTER VALUE
66B5   DD7407    1233                LD      (IX+SRC_ADDR+1), H
66B8   C1        1234                POP     BC
66B9   E1        1235                POP     HL
66BA   E5        1236                PUSH    HL
66BB   C5        1237                PUSH    BC
66BC   DD4608    1238                LD      B, (IX+DEST_BANK)
66BF   CD9964    1239                CALL    BANK_ENABLE       ;SELECT DEST BANK
66C2   44        1240                LD      B, H              ;MOVE FROM STACK TO DEST
66C3   4D        1241                LD      C, L
66C4   DD5E04    1242                LD      E, (IX+DEST_ADDR)
66C7   DD5605    1243                LD      D, (IX+DEST_ADDR+1)
66CA   DD6E00    1244                LD      L, (IX+BUF_PTR)
66CD   DD6601    1245                LD      H, (IX+BUF_PTR+1)
66D0   07        1246                RLCA
66D1   0F        1247                RRCA
66D2   3805      1248                JR      C, MB_RV2         ;IF A < 0
66D4   EDB0      1249                LDIR
66D6   09        1250                ADD     HL, BC            ;INCREMENT POINTER
66D7   1805      1251                JR      MB_UP2
66D9   EDB8      1252  MB_RV2        LDDR
66DB   A7        1253                AND     A
66DC   ED42      1254                SBC     HL, BC            ;DECREMENT POINTER
66DE   DD7504    1255  MB_UP2        LD      (IX+DEST_ADDR), L  ;STORE NEW POINTER VALUE
66E1   DD7405    1256                LD      (IX+DEST_ADDR+1), H
66E4   C1        1257                POP     BC                ;RESTORE REGISTERS
66E5   D1        1258                POP     DE
66E6   E1        1259                POP     HL
66E7   C9        1260                RET
                 1261  ;
                 1262  ;
                 1263  ;  CREATE_BITMAP (ADDR: HL; BITMAP: A)
                 1264  ;
                 1265  ;
66E8   54        1266  CREATE_BITMAP LD      D, H              ;SAVE START ADDR
66E9   5D        1267                LD      E, L
66EA   DD4E02    1268                LD      C, (IX+LENGTH)
66ED   DD4603    1269                LD      B, (IX+LENGTH+1)
66F0   DD7E00    1270                LD      A, (IX+DIRECTION)
66F3   07        1271                RLCA                      ;CALCULATE END ADDR
66F4   0F        1272                RRCA
66F5   3803      1273                JR      C, CB_SUB         ;IF A < 0
66F7   09        1274                ADD     HL, BC
66F8   1802      1275                JR      CB_CONT
66FA   ED42      1276  CB_SUB        SBC     HL, BC
66FC   CD4D64    1277  CB_CONT       CALL    GET_CHUNK         ;GET END CHUNK BIT
66FF   2F        1278                CPL
6700   47        1279                LD      B, A
6701   EB        1280                EX      DE, HL
6702   CD4D64    1281                CALL    GET_CHUNK         ;GET START CHUNK BIT
6705   2F        1282                CPL
6706   4F        1283                LD      C, A
```

```
6707    A8          1284                XOR     B
6708    2816        1285                JR      Z, CB_EXIT
670A    79          1286                LD      A, C            ;HERE IF START AND ENC CHUNKSD
670B    A0          1287                AND     B               ; ARE NOT THE SAME
670C    47          1288                LD      B, A            ;PUT START AND END BITS TOGETHER AND
670D    0E00        1289                LD      C, 0            ; FILL IN BTEWEEN THEM WITH ZEROES
670F    37          1290                SCF
6710    78          1291  CB_NB1        LD      A, B            ;TEST NEXT BIT
6711    CB11        1292                RL      C
6713    A1          1293                AND     C
6714    20FA        1294                JR      NZ, CB_NB1      ;OTHERWISE, FOUND FIRST ZERO
6716    78          1295  CB_NB2        LD      A, B            ;TEST NEXT BIT
6717    CB11        1296                RL      C
6719    A1          1297                AND     C
671A    2804        1298                JR      Z, CB_EXIT      ;FOUND LAST ZERO
671C    A8          1299                XOR     B               ;OTHERWISE, UPDATE BITMAP
671D    47          1300                LD      B, A
671E    18F6        1301                JR      CB_NB2
6720    78          1302  CB_EXIT       LD      A, B            ;RETURN BITMAP
6721    C9          1303                RET
                    1304  ;
                    1305  ;
                    1306  ;  XFER_BYTES (DIRECTION, LENGTH, DEST_ADDR, SRC_ADDR, DEST_BANK,
                    1307  ;              SRC_BANK: PASSED ON STACK IN ORDER SHOWN; STATUS_CODE: A)
                    1308  ;
                    1309  ;     ALL PARAMETERS ON STACK HAVE OFFSETS DEFINED ABOVE.
                    1310  ;
                    1311  ;
6722    F5          1312  XFER_BYTES    PUSH    AF              ;SAVE REGS
6723    C5          1313                PUSH    BC
6724    D5          1314                PUSH    DE
6725    E5          1315                PUSH    HL
6726    210000      1316                LD      HL, 0
6729    39          1317                ADD     HL, SP
672A    110A00      1318                LD      DE, 10
672D    19          1319                ADD     HL, DE
672E    EB          1320                EX      DE, HL          ;DE POINTS TO START OF PARMS
672F    3A1563      1321                LD      A, (BS_MAX_BANK)
6732    4F          1322                LD      C, A
6733    0600        1323                LD      B, 0
6735    210000      1324                LD      HL, 0
6738    39          1325                ADD     HL, SP
6739    A7          1326                AND     A
673A    ED42        1327                SBC     HL, BC
673C    2B          1328                DEC     HL
673D    2B          1329                DEC     HL              ;HL = SP - MAX_BANK - 2
673E    E5          1330                PUSH    HL
673F    DDE1        1331                POP     IX              ;IX POINTS TO LOCATION TO SAVE STATUS
6741    DDF9        1332                LD      SP, IX
6743    CD1E65      1333                CALL    SAVE_STATUS     ;SAVE BANKS' STATUS
6746    D5          1334                PUSH    DE
6747    DDE1        1335                POP     IX              ;IX NOW POINTS TO PARMS
6749    DD6E06      1336                LD      L, (IX+SRC_ADDR)
674C    DD6607      1337                LD      H, (IX+SRC_ADDR+1)

674F    CDE866      1338                CALL    CREATE_BITMAP   ;GET SRC BITMAP
6752    F5          1339                PUSH    AF              ;SAVE ON STACK TEMPORARILY
6753    DD6E04      1340                LD      L, (IX+DEST_ADDR)
6756    DD6605      1341                LD      H, (IX+DEST_ADDR+1)
6759    CDE866      1342                CALL    CREATE_BITMAP   ;GET DEST BITMAP
675C    4F          1343                LD      C, A            ;C = DEST BITMAP
675D    F1          1344                POP     AF
675E    47          1345                LD      B, A            ;B = SRC BITMAP
675F    DD7E09      1346                LD      A, (IX+SRC_BANK)
6762    DD5608      1347                LD      D, (IX+DEST_BANK)
6765    BA          1348                CP      D               ;COMPARE SRC AND DEST BANK NUMBERS
6766    2005        1349                JR      NZ, XB_DIFF_BANKS
6768    78          1350                LD      A, B            ;HERE IF BANK NUMBERS ARE DIFFERENT
6769    A1          1351                AND     C
676A    47          1352                LD      B, A            ;B = UNION OR SRC AND DEST BITMAPS
676B    180B        1353                JR      XB_DO_MOVE
676D    78          1354  XB_DIFF_BANKS LD      A, B            ;CHECK FOR OVERLAP BETWEEN SRC AND
676E    B1          1355                OR      C               ; DEST CHUNKS
676F    FEFF        1356                CP      0FFH
6771    202D        1357                JR      NZ, XB_OVERLAP
6773    58          1358                LD      E, B            ;HERE IF NO OVERLAP
6774    42          1359                LD      B, D
6775    CD9964      1360                CALL    BANK_ENABLE     ;SELECT DEST BANK
6778    DD4609      1361  XB_DO_MOVE    LD      B, (IX+SRC_BANK)
677B    4B          1362                LD      C, E
677C    CD9964      1363                CALL    BANK_ENABLE     ;SELECT SRC BANK
677F    DD6E06      1364                LD      L, (IX+SRC_ADDR)
6782    DD6607      1365                LD      H, (IX+SRC_ADDR+1)
6785    DD5E04      1366                LD      E, (IX+DEST_ADDR)
6788    DD5605      1367                LD      D, (IX+DEST_ADDR+1)
678B    DD4E02      1368                LD      C, (IX+LENGTH)
678E    DD4603      1369                LD      B, (IX+LENGTH+1)
6791    DD7E00      1370                LD      A, (IX+DIRECTION)
6794    07          1371                RLCA
6795    0F          1372                RRCA
6796    3804        1373                JR      C, XB_REVERSE   ;IF A < 0
6798    EDB0        1374                LDIR
679A    1852        1375                JR      XB_EXIT
679C    EDB8        1376  XB_REVERSE    LDDR
679E    184E        1377                JR      XB_EXIT
67A0    21C05C      1378  XB_OVERLAP    LD      HL, MSTBOT
67A3    C5          1379                PUSH    BC
67A4    06FF        1380                LD      B, 255
67A6    CD1663      1381                CALL    GET_WORD
67A9    C1          1382                POP     BC
67AA    110002      1383                LD      DE, STKSZ
67AD    A7          1384                AND     A
67AE    ED52        1385                SBC     HL, DE          ;HL = ADDRESS OF STACK LIMIT
67B0    112000      1386                LD      DE, FREE_BYTES
67B3    19          1387                ADD     HL, DE
67B4    EB          1388                EX      DE, HL          ;DE = SP_NEW
67B5    210000      1389                LD      HL, 0
67B8    39          1390                ADD     HL, SP          ;HL = SP_OLD
67B9    13          1391                INC     DE              ;COMPARE SP_OLD WITH SP_NEW
```

```
67BA   A7          1392                   AND     A
67BB   ED52        1393                   SBC     HL, DE
67BD   3004        1394                   JR      NC, XB_SPACE     ;IF SP_OLD - SP_NEW > 0
67BF   3E01        1395                   LD      A, 1             ;RETURN ERROR CODE
67C1   182B        1396                   JR      XB_EXIT
67C3   1B          1397  XB_SPACE         DEC     DE
67C4   EB          1398                   EX      DE, HL
67C5   F9          1399                   LD      SP, HL           ;SET SP TO SP_NEW
67C6   13          1400                   INC     DE               ;DE = BUF_SZ
67C7   DD7E00      1401                   LD      A, (IX+DIRECTION)  ;HL = BUF_PTR
67CA   DD7500      1402                   LD      (IX+BUF_PTR), L     ;SAVE BUF_PTR ON STACK
67CD   DD7401      1403                   LD      (IX+BUF_PTR+1), H
67D0   DD6E02      1404                   LD      L, (IX+LENGTH)
67D3   DD6603      1405                   LD      H, (IX+LENGTH+1)
67D6   A7          1406  XB_MOVE_LOOP     AND     A                ;HL = BYTES LEFT TO MOVE
67D7   ED52        1407                   SBC     HL, DE           ;DE = BYTES TO MOVE THIS TIME
67D9   3805        1408                   JR      C, XB_LAST_MOVE ;IF LESS THAN BUF_SZ BYTES LEFT
67DB   CD8C66      1409                   CALL    MOVE_BYTES
67DE   18F6        1410                   JR      XB_MOVE_LOOP
67E0   19          1411  XB_LAST_MOVE     ADD     HL, DE
67E1   EB          1412                   EX      DE, HL
67E2   CD8C66      1413                   CALL    MOVE_BYTES
67E5   EB          1414                   EX      DE, HL
67E6   DD6E00      1415                   LD      L, (IX+BUF_PTR)
67E9   DD6601      1416                   LD      H, (IX+BUF_PTR+1)
67EC   19          1417                   ADD     HL, DE           ;HL = BUF_PTR+BUF_SZ
67ED   F9          1418                   LD      SP, HL           ;RESTORE STACK POINTER
67EE   AF          1419  XB_EXIT          XOR     A                ;RETURN CODE FOR SUCCESSFUL COMPLETION
67EF   DD210000    1420                   LD      IX, 0
67F3   DD39        1421                   ADD     IX, SP
67F5   CD4A65      1422                   CALL    RESTORE_STATUS  ;RESTORE STATE AND RETURN ZERO CODE
67F8   DD23        1423                   INC     IX
67FA   DDF9        1424                   LD      SP, IX
67FC   E1          1425                   POP     HL               ;RESTORE REGS
67FD   D1          1426                   POP     DE
67FE   C1          1427                   POP     BC
67FF   F1          1428                   POP     AF
6800   DDE1        1429                   POP     IX               ;CLEAN UP PARMS
6802   DDE3        1430                   EX      (SP), IX
6804   DDE1        1431                   POP     IX
6806   DDE3        1432                   EX      (SP), IX
6808   DDE1        1433                   POP     IX
680A   DDE3        1434                   EX      (SP), IX
680C   DDE1        1435                   POP     IX
680E   DDE3        1436                   EX      (SP), IX
6810   DDE1        1437                   POP     IX
6812   DDE3        1438                   EX      (SP), IX
6814   C9          1439                   RET
                   1440  ;
                   1441  ;
                   1442  ;   GOTO_EXT_INIT (ADDR: HL)
                   1443  ;
                   1444  ;
6815   DDE1        1445  GOTO_EXT         POP     IX               ;TRASH RET ADDR
```

```
6817   F5          1446                   PUSH    AF
6818   DBFF        1447                   IN      A, (HREXPT)
681A   CBFF        1448                   SET     7, A
681C   D3FF        1449                   OUT     (HREXPT), A
681E   3E01        1450                   LD      A, 1
6820   D3F4        1451                   OUT     (DKHSPT), A
6822   F1          1452                   POP     AF
6823   E9          1453                   JP      (HL)
                   1454                   END
```

```
LOC    OBJ CODE M STMT SOURCE STATEMENT

                    1  DISPATCH        EQU     6200H
                    2  INT             EQU     62AEH
                    3  GET_WORD        EQU     6316H
                    4  PUT_WORD        EQU     633BH
                    5  GET_STATUS      EQU     6405H
                    6  GET_NUMBER      EQU     645EH
                    7  BANK_ENABLE     EQU     6499H
                    8  SAVE_STATUS     EQU     651EH
                    9  RESTORE_STATUS  EQU     654AH
                   10  BS_STACK        EQU     658EH
                   11  BS_SP           EQU     65CEH
                   12  GOTO_BANK       EQU     6572H
                   13  CALL_BANK       EQU     65D0H
                   14  MOVE_BYTES      EQU     668CH
                   15  CREATE_BITMAP   EQU     66E8H
                   16  XFER_BYTES      EQU     6722H
                   17
                   18  ;  HERE IS THE FIXUP TABLE FOR THE VIDEO MODE CHANGER.  IT DEFINES THE
                   19  ;  LOCATIONS IN RAM WHICH MUST BE UPDATED WHEN MOVED FROM CHUNK 3 TO CHUNK 7
                   20  ;  OR V CE-VERSA.  THE ADDRESSES IN THE TABLE ARE DEFINED AS CHUNK 3 ADDRESSES
                   21
                   22
1D00               23                  ORG     1D00H
                   24
                   25
1D00   3262        26  FIXTBL          DEFW    DISPATCH+32H
1D02   4D62        27                  DEFW    DISPATCH+4DH
1D04   7262        28                  DEFW    DISPATCH+72H
1D06   AB62        29                  DEFW    DISPATCH+0ABH
                   30
1D08   B862        31                  DEFW    INT+0AH
1D0A   CD62        32                  DEFW    INT+1FH
1D0C   D362        33                  DEFW    INT+25H
1D0E   DC62        34                  DEFW    INT+2EH
1D10   FB62        35                  DEFW    INT+4DH
                   36
1D12   1A63        37                  DEFW    GET_WORD+4H
1D14   2063        38                  DEFW    GET_WORD+0AH
1D16   2463        39                  DEFW    GET_WORD+0EH
1D18   2A63        40                  DEFW    GET_WORD+14H
1D1A   3563        41                  DEFW    GET_WORD+1FH
                   42
1D1C   3E63        43                  DEFW    PUT_WORD+3H
1D1E   4463        44                  DEFW    PUT_WORD+9H
1D20   4863        45                  DEFW    PUT_WORD+0DH
1D22   4E63        46                  DEFW    PUT_WORD+13H
1D24   5763        47                  DEFW    PUT_WORD+1CH
                   48
1D26   1764        49                  DEFW    GET_STATUS+12H
1D28   1E64        50                  DEFW    GET_STATUS+19H
1D2A   2864        51                  DEFW    GET_STATUS+23H
                   52
1D2C   6164        53                  DEFW    GET_NUMBER+3H
1D2E   6564        54                  DEFW    GET_NUMBER+7H
1D30   6D64        55                  DEFW    GET_NUMBER+0FH
```

```
LOC    OBJ CODE M STMT SOURCE STATEMENT

1D36   B364        59                  DEFW    BANK_ENABLE+1AH
1D38   0E65        60                  DEFW    BANK_ENABLE+75H
1D3A   1665        61                  DEFW    BANK_ENABLE+7DH
                   62
1D3C   3265        63                  DEFW    SAVE_STATUS+14H
1D3E   3A65        64                  DEFW    SAVE_STATUS+1CH
                   65
1D40   5C65        66                  DEFW    RESTORE_STATUS+12H
1D42   6665        67                  DEFW    RESTORE_STATUS+1CH
                   68
1D44   CE65        69                  DEFW    BS_SP
                   70
1D46   8565        71                  DEFW    GOTO_BANK+13H
                   72
1D48   D365        73                  DEFW    CALL_BANK+3H
1D4A   ED65        74                  DEFW    CALL_BANK+1DH
1D4C   F965        75                  DEFW    CALL_BANK+29H
1D4E   1E66        76                  DEFW    CALL_BANK+4EH
1D50   2D66        77                  DEFW    CALL_BANK+5DH
1D52   3A66        78                  DEFW    CALL_BANK+6AH
1D54   4266        79                  DEFW    CALL_BANK+72H
1D56   5066        80                  DEFW    CALL_BANK+80H
1D58   6666        81                  DEFW    CALL_BANK+96H
1D5A   7266        82                  DEFW    CALL_BANK+0A2H
1D5C   8066        83                  DEFW    CALL_BANK+0B0H
                   84
1D5E   9466        85                  DEFW    MOVE_BYTES+8H
1D60   C066        86                  DEFW    MOVE_BYTES+34H
                   87
1D62   FD66        88                  DEFW    CREATE_BITMAP+15H
1D64   0367        89                  DEFW    CREATE_BITMAP+1BH
                   90
1D66   3067        91                  DEFW    XFER_BYTES+0EH
1D68   4F67        92                  DEFW    XFER_BYTES+2DH
1D6A   5067        93                  DEFW    XFER_BYTES+2EH
1D6C   5A67        94                  DEFW    XFER_BYTES+38H
1D6E   7667        95                  DEFW    XFER_BYTES+54H
1D70   7D67        96                  DEFW    XFER_BYTES+5BH
1D72   A767        97                  DEFW    XFER_BYTES+85H
1D74   DC67        98                  DEFW    XFER_BYTES+0BAH
1D76   E367        99                  DEFW    XFER_BYTES+0C1H
1D78   F667       100                  DEFW    XFER_BYTES+0D4H
                  101
1D7A   0000       102                  DEFW    0         ;THIS IS THE TABLE TERMINATOR
```

APPENDIX B

```
               13  *EJECT
               14  *INCL   SYSVAR
               15  *PAGESIZE 54
               16
               17  RST:     MACRO #ROUT
               18           RST #ROUT
               19           ENDM
               20
               21  ASSERT:  MACRO #COND
               22           COND .NOT.(#COND)
               23           ERROR IN ASSERTION #COND
               24           ENDC
               25           ENDM
               26
               27  ; SYSTEM VARIABLES
               28
               29  L_LEN    EQU 32           ; # CHARS PER LINE ON THE DISPLAY
               30  TV_LNS:  EQU 24           ; NO. OF LINES ON TV SCREEN
               31  D_FILE:  EQU 4000H        ; ADDRESS OF DISPLAY FILE
               32  ATTRS:   EQU D_FILE+L_LEN*TV_LNS*8      ; SCREEN ATTRIBUTES
               33  PRBUFF:  EQU ATTRS+TV_LNS*L_LEN  ; PRINTER BUFFER
               34           ASSERT PRBUFF.AND.OFFH=0
                            COND .NOT.(PRBUFF.AND.OFFH=0)
                            ERROR IN ASSERTION PRBUFF.AND.OFFH=0
                            ENDC
               35  KSTATE:  EQU PRBUFF+L_LEN*8      ; SEE KB DOCUMENTATION
               36   KS_A:   EQU 0            ;    1ST BYTE IS A CHAR KEY PRESSED
               37   KS_C:   EQU 1            ;    2ND IS TIME TILL COUNTS AS RELEASED
               38   KS_B:   EQU 2            ;    3RD IS TIME (IN FRAMES) TILL REPEAT
               39   KS_D:   EQU 3            ;    4TH IS CODE WHEN REPEATS
               40                            ;    5TH - 8TH ARE A SECOND SET OF 1ST FOUR
               41  LAST_K:  EQU KSTATE+8     ; NEWLY PRESSED KEY
               42  REPDEL:  EQU LAST_K+1     ; DELAY BEFORE 1ST REPEAT (INITIALIZED TO 35)
               43  REPPER:  EQU REPDEL+1     ; DELAY BEFORE SUBSEQUENT REPEATS (INITIALIZED TO 5)
               44  DEFADD:  EQU REPPER+1     ; -> CHAR AFTER '(' IN FORMAL PARAMETER LIST; MUST BE
               45                            ;    0 WHEN NO USER-DEFINED FN BEING EVALUATED
               46  K_DATA:  EQU DEFADD+2     ; DATA BYTE IN COMPOSITE CHAR FROM KEYBOARD
               47  TVDATA:  EQU K_DATA+1     ; USED FOR STORING BYTES IN COMPOSITE CHARACTERS:
               48                            ;    (TVDATA) = KEY BYTE,
               49                            ;    (TVDATA+1) = 1ST DATA BYTE FOR AT OR TAB.
               50  STRMS:   EQU TVDATA+2     ; STREAM DATA: POINTERS (OFFSETS FROM (CHANS)-1) TO
               51                            ;    CHANNELS. 0 = STREAM NOT OPEN.
               52   HIDSTR:EQU 3             ; NO. STREAMS HIDDEN FROM USER. THESE ARE TIED
               53                            ;    UNALTERABLY TO SPECIFIC CHANNELS.
               54   HID_K: EQU -3            ; KEYBOARD
               55   HID_S: EQU -2            ; TV, UPPER HALF OF SCREEN
               56   HID_R: EQU -1            ; INSERTION IN RAM
               57   COM_ST:EQU 0             ; STREAM FOR COMMANDS
               58   INP_ST:EQU 1             ; STREAM FOR INPUT DATA
               59   PR_ST: EQU 2             ; STREAM FOR PRINT
               60   LPR_ST:EQU 3             ; STREAM FOR LPRINT
               61  CHARS:   EQU STRMS+(HIDSTR+16)*2 ; -> 8*20H BYTES BEFORE CHARACTER SET
               62  FART:    EQU CHARS+2      ; NO. CYCLES OF ERROR NOISE (2 8VES BELOW MIDDLE C)
               63  PIP:     EQU FART+1       ; NO. CYCLES OF KEYBOARD NOISE (3 8VES ABOVE MIDDLE C)
```

```
Y:       EQU PIP+1        ; VALUE ALWAYS HELD IN IY
ERR_NR   EQU Y            ; [RUN TIME ERROR #] - 1
FLAGS:   EQU ERR_NR+1     ; VARIOUS FLAGS
 SPC:    EQU 0            ;    SUPPRESS SPACE BEFORE TOKENS
 PR:     EQU 1            ;    PRINTING TO PRINTER, NOT TV
 LMODE1:EQU 2             ;    L MODE, NOT K, AT CURRENT CHARACTER
 LMODE: EQU 3             ;    L MODE, NOT K, AT CURSOR
 KEYHIT:EQU 5             ;    KEYHIT FOUND
 NO:     EQU 6            ;    EXPRESSION IS NUMERICAL, NOT STRING
 INTPT:  EQU 7            ;    REQ INTERPRET RATHER THAN CHECK SYNTAX
TVFLAG:  EQU FLAGS+1      ; FLAGS ASSOCIATED WITH THE TV
 LHS:    EQU 0            ;    PRINTING TO LOWER HALF OF SCREEN
 EDIT:   EQU 1            ;    OUTPUTTING LINE FOR EDIT OR NO. FOR STRING
 ECHREQ:EQU 3             ;    ECHO REQUESTED IF INPUTTING FROM KEYBOARD
 LIST:   EQU 4            ;    OUTPUTTING AN AUTOMATIC LISTING
 CLHS:   EQU 5            ;    CLEAR LOWER HALF WHEN KEY PRESSED
ERR_SP:  EQU TVFLAG+1     ;-> BOTTOM ITEM ON MACHINE STACK.
LISTSP:  EQU ERR_SP+2     ; -> RETURN ADDRESS FROM AUTOMATIC LISTING
MODE:    EQU LISTSP+2     ; 0 = K OR L, 1 = F, 2 = G.
NEWPPC:  EQU MODE+1       ; LINE TO BE JUMPED TO
NSPPC:   EQU NEWPPC+2     ; SUBLINE TO BE JUMPED TO (BIT 7 OFF FORCES JUMP)
PPC      EQU NSPPC+1      ; LINE # OF INSTR BEING INTERPRETED
SUBPPC:  EQU PPC+2        ; NO. WITHIN LINE OF INSTR BEING INTERPRETED
BORDCR:  EQU SUBPPC+1     ; BORDER COLOUR (SHIFTED LEFT BACKG BITS WITH 0S IN
                          ;    BITS 0-2 & 6-7)
E_PPC    EQU BORDCR+1     ; LINE # OF "CURRENT" LINE IN LISTING
                          ;THE VARIABLES FROM (VARS) UP TO & INCLUDING (STKEND)
                          ;    ARE 'MOVABLE' IN THE SENSE THAT THEY ARE ADJUSTED
                          ;    (BY REMGSZ IN MODULE EDIT) WHENEVER STUFF IS
                          ;    INSERTED IN OR DELETED FROM RAM.
VARS     EQU E_PPC+2      ; -> 1ST RECORD FOR A VARIABLE (LAST IS 1 BYTE 80H)
DEST     EQU VARS+2       ; -> VAR MATCHED BY TEMPL CODE 1 OR 4 (TEXT OR RECORD)
CHANS_:  EQU DEST+2       ; -> CHANNEL DATA (INCLUDING FLOPPY BUFFERS).
                          ;    EACH ITEM COMPRISES:
                          ;    THE ADDRESS OF AN OUTPUT ROUTINE FOR WRCH,
                          ;    THE ADDRESS OF AN INPUT ROUTINE FOR INCH,
                          ;    A 1-BYTE CODE FOR THE DEVICE TYPE,
                          ;    &, WHERE APPROPRIATE, A FILE NAME, ADDITIONAL
                          ;    DATA & A BUFFER.
CURCHL:  EQU CHANS_+2     ; -> DATA FOR CURRENT CHANNEL
PROG:    EQU CURCHL+2     ; -> BASIC PROGRAM
NXTLIN:  EQU PROG+2       ; -> NEXT LINE OF SOURCE CODE
DATADD:  EQU NXTLIN+2     ; -> TERMINATOR OF LAST DATA ITEM
E_LINE   EQU DATADD+2     ; -> LINE BEING EDITED
K_CUR:   EQU E_LINE+2     ; -> CURRENT CHAR IN INPUT BUFFER
CH_ADD   EQU K_CUR+2      ; -> CURRENT CHAR WHEN SYNTAX CHECKING ETC
X_PTR    EQU CH_ADD+2     ; -> 1ST CHAR NOT SYNTACTICALLY OK (0 IF ALL OK)
                          ;    ALSO STORES (CH_ADD) DURING READ & INPUT
WORKSP:  EQU X_PTR+2      ; -> TEMPORARY WORK SPACE
STKBOT:  EQU WORKSP+2     ; -> BOTTOM OF CALCULATOR STACK
STKNXT:  EQU STKBOT+2     ; -> NEXT FREE PLACE ON CALCULATOR STACK
STKEND:  EQU STKNXT       ; ALTERNATIVE NAME

BREG:    EQU STKEND+2     ; KEEPS VALUE OF CALCULATOR B REGISTER
```

```
          118  MEM:     EQU BREG+1      ; -> AREA USED BY CALCTR INSTRS MEMORY & COPY
          119  FLAGS2:  EQU MEM+2       ; MORE FLAGS
          120   ALOS:   EQU 0           ;    AUTOMATIC LISTING ON SCREEN
          121   PRLEFT:EQU 1            ;    PRINTER BUFFER NOT EMPTY
          122   L_STR:  EQU 2           ;    INSIDE STRING WHEN DOING KB MODE IN LISTCH
          123   CAPS_L:EQU 3            ;    CAPITALS SHIFT LOCK ON
          124   RETPOS:EQU 4            ;    RETYPE POSSIBLE AFTER SYNTAX ERROR
          125   DELREP:EQU 5            ;    DELETE KEY REPEAT (KEY HELD DOWN)
          126  DF_SZ    EQU FLAGS2+1    ; # LINES IN 2ND HALF OF SCREEN INC SEP'G BLANK LINE
          127  S_TOP    EQU DF_SZ+1     ; LINE # (IN PROGRAM) OF TOP LINE ON SCREEN
          128  OLDPPC   EQU S_TOP+2     ; LINE # OF E.G. INTERRUPTED STMT
          129  OSPPC:   EQU OLDPPC+2    ; (OLD SUB PPC) STATEMENT NO. WITHIN LINE FOR OLDPPC
          130  FLAGX:   EQU OSPPC+1     ; FLAGS ASSOCIATED WITH ASSIGNMENT
          131   FLEX:   EQU 0           ;    FLEXIBLE LENGTH ASSIGNMENT REQUIRED
          132   UNFND:  EQU 1           ;    DESTINATION OF ASSIGNMENT NOT FOUND
          133   INPLN:  EQU 5           ;    REQ INPUT VALUE RATHER THAN LINE OF PROGRAM
          134  ;NO:     EQU 6           ;    REQD TYPE IS NUMERIC
          135   LINPLN:EQU 7            ;    LINPUT (INPUT LINE) RATHER THAN STRAIGHT INPUT
          136  STRLEN:  EQU FLAGX+1     ; LENGTH OF DESTINATION WHEN STRING TYPE
          137  T_ADDR   EQU STRLEN+2    ; -> NEXT BYTE IN TEMPLATE
          138  SEED     EQU T_ADDR+2    ; LAST RANDOM # BEFORE SCALING
          139  FRAMES:  EQU SEED+2      ; LS 2 BYTES OF 3-BYTE FRAME COUNTER
          140  FRAME2:  EQU FRAMES+2    ; MS BYTE OF 3-BYTE FRAME COUNTER
          141  UDG:     EQU FRAME2+1    ; -> 1ST USER DEFINED GRAPHIC
          142  COORDS:  EQU UDG+2       ; COORDINATES OF LAST PLOT ETC.: (COORDS) = X-COORD.,
          143                           ;    (COORDS+1) = Y-COORD.
          144  P_POSN:  EQU COORDS+2    ; COLUMN NO. OF PRINTER POSN
          145  PR_CC:   EQU P_POSN+1    ; LS BYTE OF ADDRESS OF NEXT CHAR FOR PRINTER
          146  ECHO_E:  EQU PR_CC+2     ; COORDS IN LOWER HALF OF END OF KEYBOARD INPUT BUFFER
          147  DF_CC    EQU ECHO_E+2    ; -> SCREEN CHAR UNDER PRINT CURSOR
          148  DFCCL:   EQU DF_CC+2     ; LIKE DF_CC FOR LOWER HALF
          149  S_POSN   EQU DFCCL+2     ; SCREEN POSN (COL & LINE) OF NEXT CHAR TO BE OUTPUT
          150  SPOSNL:  EQU S_POSN+2    ; LIKE S_POSN FOR LOWER HALF
          151  SCR_CT:  EQU SPOSNL+2    ; (SCROLL COUNT) DECREMENTED FOR EACH SCROLL
          152  ATTR_P:  EQU SCR_CT+1    ; CURRENT PERMANENT PRINTING ATTRIBUTES
          153   FOREG:  EQU 0           ;    LS BIT OF FOREGROUND COLOUR
          154    BLUE:  EQU 0           ;       (INK)
          155    RED:   EQU 1
          156    GREEN:         EQU 2
          157   BACKG:  EQU 3           ;    LS BIT OF BACKGROUND COLOUR
          158    BLUEB:   EQU 3         ;       (PAPER)
          159    REDB:    EQU 4
          160    GREENB:  EQU 5
          161   HILITE: EQU 6           ;    BRIGHT
          162   FLASH:   EQU 7          ;    FLASH
          163  MASK_P:  EQU ATTR_P+1    ; CURRENT PERMANENT PRINTING ATTRIBUTES MASK:
          164                           ;    0 FOR NEW, 1 FOR OLD
          165  ATTR_T:  EQU MASK_P+1    ; CURRENT TEMP. PRINTING ATTRIBUTES (BITS AS ATTR_P)
          166  MASK_T:  EQU ATTR_T+1    ; CURRENT TEMPORARY PRINTING ATTRIBUTES MASK
          167  P_FLAG:  EQU MASK_T+1    ; ADDITIONAL FLAGS FOR PRINTING: TEMPORARY FLAGS IN
          168                           ;    EVEN BITS, PERMANENT FLAGS IN ODD BITS
          169   XOR_CH:EQU 0            ;    NEW CHARS XOR'D INTO OLD RATHER THAN BEING LOADED
          170   INV_CH:EQU 2            ;    NEW CHARS INVERTED
          171   F_CB:   EQU 4           ;    FOREGROUND := COMPLEMENT OF BACKGROUND
```

```
                  172  B_CF:  EQU 6           ;    BACKGROUND := COMPLEMENT OF FOREGROUND
                  173 MEMBOT: EQU P_FLAG+1    ; BOTTOM OF CALCULATOR MEMORY (6 NUMBERS)
                  174 NMIADD: EQU MEMBOT+30   ; -> USER'S NMI SERVICE ROUTINE
                  175 RAMTOP: EQU NMIADD+2    ; LAST ADDRESS OF BASIC SYSTEM AREA
                  176 P_RAMT: EQU RAMTOP+2    ; -> LAST BYTE OF PHYSICAL RAM
                  177
                  178                  ;**** ADDITIONAL
                  179 ERR_LN: EQU P_RAMT+2    ;POINTER TO ON ERROR LINE NUMBER FOR A GO-TO.
                  180 ERR_C:  EQU ERR_LN+2    ;STORE LINE NUMBER IN WHICH ERROR OCCURRED
                  181 ERR_S:  EQU ERR_C+2     ;STORES STATEMENT NUMBER IN WHICH ERROR OCCURRED
                  182 ERR_T:  EQU      ERR_S+1 ;STORE FOR 'ERROR TYPE' AFTER A 'ON ERR'
                  183 SYSCON: EQU ERR_T+1     ;SYSTEM CONFIGURATION TABLE.
                  184 MAX_BANK: EQU SYSCON+2  ;LARGEST BANK NUMBER ASSIGNED
                  185 CURCBN: EQU MAX_BANK+1  ;BANK NUMBER OF THE CURRENT CHANNEL
                  186 MSTBOT: EQU CURCBN+1    ;ADDRESS OF LOCATION ABOVE MACHINE STACK
                  187 VIDMOD: EQU MSTBOT+2
                  188 ;                       ; NOTE:  UNUSED BYTE AFTER VIDMOD
                  189 ;
                  190 ARSBUF: EQU VIDMOD+2    ;POINTER TO AROS BUFFER.
                  191 ARSFLG: EQU ARSBUF+2    ;AROS FLAG - BIT 7 SET INDICATES AROS PRESENT.
                  192                         ;BIT 4 SET INDICATES NXTLIN POINTING TO AROS.
                  193                         ;BIT 3 SET INDICATES DATADD POINTING TO AROS.
                  194                         ;THESE BITS BECOME IMPORTANT FOR THE INSERT ROUTINE
                  195                         ;(POINTERS POINTING TO AROS SHOULD NOT BE UPDATED
                  196                         ;FOR AN INSERTION INTO RAM).
                  197 ADATLN: EQU ARSFLG+1    ;POINTER TO THE START OF THE CURRENT DATA LINE
                  198                         ; (AROS ONLY)
                  199 DTLNLN: EQU ADATLN+2    ;LENGTH OF THE CURRENT DATA LINE (AROS ONLY).
                  200 STRMNM: EQU DTLNLN+2    ;CURRENT STREAM NUMBER, USED FOR BUS EXPANSION
                  201                         ; UNIT DEVICES.
                  202 MSTACK: EQU     6200H   ;LOCATION ABOVE MACHINE STACK
                  203 DRIVES: EQU     6840H   ;START OF 'DRIVES' AREA
                  204 BANK_ENABLE     EQU     6499H
                  205 CALL_BANK       EQU     65D0H
                  206 MOVE_SZ         EQU     DRIVES-6000H
                  207 DEST7           EQU     0FFFFH-MOVE_SZ+1
                  208 FIX             EQU     DEST7-6000H
                  209 CALL_VBANK      EQU     CALL_BANK+FIX
                  210 GOTO_BANK       EQU     6572H   ;ADDRESS OF "GO TO BANK" BANK SWITCHING
                  211                                 ; AWARD.
                  212 XFER_BYTES      EQU     6722H   ;INDIRECT DATA TRANSFER BETWEEN BANKS.
                  213 GOTO_EXT        EQU     6815H   ;FOR INITIALIZATION CODE IN HOME BANK
                  214                                 ; EXTENTION.
                  215 SLVM            EQU     01ABH   ;ADDRESS OF TAPE ROUTINES FOR SAVE, LOAD
                  216                                 ; VERIFY AND MERGE COMMANDS.
                  217 BLDSCT          EQU     09F4H   ;ADDRESS OF INITIALIZATION ROUTINE TO
                  218                                 ; BUILD THE SYSTEM CONFIGURATION TABLE.
                  219 RESSCT          EQU     0C4CH   ;ADDRESS OF RESET ROUTINE TO ADD DEVICES.
                  220 PASSING         EQU     0F09H   ;ADDRESS OF ROUTINE TO PUSH PARAMETERS TO
                  221                                 ; THE BEU ROUTINES ONTO THE MACHINE STACK.
                  222                 ;****
                  223
                  224
                  225 ; OTHER EQUATES
```

```

                      ;RESTARTS

ERROR:  EQU 8
WRCH:   EQU 16
IGN_SP: EQU 24
NXT_IS: EQU 32
CALCTR: EQU 40
COPYUP: EQU 48

NOSIZE  EQU 5                  ; # OF BYTES IN A FLOATING POINT NUMBER
DIGIT   EQU '0'                ; DIGIT+N IS CODE FOR DIGIT N
LETTER  EQU 0                  ; LETTER+'ALPHA' IS CODE FOR LETTER ALPHA
DEBDEL: EQU 5                  ; NO. CONSECUTIVE TIMES KB SWITCH FOUND OPEN BEFORE
                               ;    KEY RECKONED RELEASED.

                      ;CONTROL CHARACTERS (APPEARING ON STREAM)

COM_CC: EQU  6                 ; PRINT COMMA
EDT_CC: EQU  7                 ; EDIT
BS_CC:  EQU  8                 ; BACKSPACE (CURSOR LEFT)
CRT_CC: EQU  9                 ; CURSOR RIGHT
CD_CC:  EQU 0AH                ; CURSOR DOWN
CU_CC:  EQU 0BH                ; CURSOR UP
RUB_CC: EQU 0CH                ; RUBOUT
CR_CC:  EQU 0DH                ; CARRIAGE RETURN (NEWLINE)
NL:     EQU CR_CC
SLUG:   EQU 0EH                ; PRECEDES 5 BYTES OF SLUG
FORECC: EQU 10H                ; FOREGROUND
                               ; THE CONTROL CHARS FOR FORE, BACK, FLASH, BRIGHT,
                               ;    INVERT & OVER ARE CONSECUTIVE IN THAT ORDER.
AT_CC:  EQU 16H                ; PRINT AT
TAB_CC: EQU 17H                ; PRINT TAB

                      ; CONTROL CHARACTERS (RECEIVED FROM KEYBOARD)

STY_KC: EQU  0                 ; STEADY
FSH_KC: EQU  1                 ; FLASH
LOL_KC: EQU  2                 ; LOWLIGHT
HIL_KC: EQU  3                 ; HIGHLIGHT
NLV_KC: EQU  4                 ; NORMAL VIDEO
INV_KC: EQU  5                 ; INVERSE VIDEO
CSL_KC: EQU  6                 ; CAPS SHIFT LOCK TOGGLE
TM_KC:  EQU 0EH                ; TOKEN MODE
GRM_KC: EQU 0FH                ; GRAPHICS MODE
FG_KC:  EQU 10H                ; FOREGROUND BLACK
BG_KC:  EQU 18H                ; BACKGROUND BLACK

SPACE:  EQU ' '
QUOTE   EQU '"'                ; STRING QUOTE
DOLLAR  EQU '$'                ; DOLLAR SIGN
COLON:  EQU ':'
COMMA   EQU ','
KET     EQU ')'
```

```
        280 BRA      EQU '('
        281 GT:      EQU '>'
        282 MINUS    EQU '-'
        283 EQUAL    EQU '='
        284 PLUS:    EQU '+'
        285 STROKE:  EQU '/'
        286 POWER:   EQU '^'
        287 POINT:   EQU '.'
        288 SHARP:   EQU  5FH        ; PRESTEL CODE FOR '#'
        289 STD_GR:  EQU  80H        ; 1ST STANDARD GRAPHIC
        290 UD_GR:   EQU  90H        ; 1ST USER-DEFINED GRAPHIC
        291
        292                  ;TOKENS
        293
        294 TOK0:    EQU 0A5H        ; 1ST TOKEN
        295 RNDTOK:  EQU 0A5H        ; 'RND'
        296 INKEY:   EQU 0A6H        ; 'INKEY$'
        297 PI:      EQU 0A7H        ; 'PI'
        298 FN_TK:   EQU 0A8H        ; 'FN'
        299 PNT_TK:  EQU 0A9H        ; 'POINT'
        300 SCRNTK:  EQU 0AAH        ; 'SCREEN$'
        301 ATTRTK:  EQU 0ABH        ; 'ATTRT'
        302 AT:      EQU 0ACH        ; 'AT'
        303 TOK_FN:  EQU FN_TK       ; 1ST TOKEN TO REQUIRE A SPACE AFTER
        304 TAB:     EQU 0ADH        ; 'TAB'
        305 VALSTK:  EQU 0AEH        ; 'VAL$'
        306 LO_MON:  EQU 0AFH        ; TOKEN FOR 1ST MONADIC OPTR AFTER VAL$ (CODE)
        307 BIN_TK:  EQU 0C4H        ; 'BIN'
        308 OR_TK:   EQU 0C5H        ; 'OR' NB THE TOKENS FOR OR, AND, <=, >=, <> ARE
        309                          ;    CONSECUTIVE IN THAT ORDER.
        310 LINETK:  EQU 0CAH        ; 'LINE'
        311 THEN:    EQU 0CBH        ; 'THEN'
        312 TO:      EQU 0CCH        ; 'TO'
        313 STEP:    EQU 0CDH        ; 'STEP'
        314 DEF_TK:  EQU 0CEH        ; 'DEF'
        315 MIN_KW:  EQU DEF_TK      ; 1ST TOKEN THAT IS A KEYWORD RATHER THAN OPERATOR
        316 CAT_TK:  EQU 0CFH        ; 'CAT'
        317 FORMTK:  EQU 0D0H        ; 'FORMAT'
        318 MOVETK:  EQU 0D1H        ; 'MOVE'
        319 DEL_TK:  EQU 0D2H        ; 'DELETE'
        320 OPN_TK:  EQU 0D3H        ; 'OPEN'
        321 CLO_TK:  EQU 0D4H        ; 'CLOSE'
        322 MGE_TK:  EQU 0D5H        ; 'MERGE'
        323 VFY_TK:  EQU 0D6H        ; 'VERIFY'
        324 BEEPTK:  EQU 0D7H        ; 'BEEP'
        325 ARC_TK:  EQU 0D8H        ; 'ARC'
        326 FGTOK:   EQU 0D9H        ; 'FOREGROUND' NB THE TOKENS FOR FORE, BACK, FLASH,
        327                          ;    BRIGHT, INVERT & OVER ARE CONSECUTIVE IN THAT
        328                          ;    ORDER.
        329 INVTOK:  EQU FGTOK+5     ; 'INVERT'
        330 OUT_TK:  EQU 0DFH        ; 'OUT'
        331 LPR_TK:  EQU 0E0H        ; 'LPRINT'
        332 LL_TK:   EQU 0E1H        ; 'LLIST'
        333 STOPTK:  EQU 0E2H        ; 'STOP'
```

```
                    334  READTK: EQU 0E3H         ; 'READ'
                    335  DATATK: EQU 0E4H         ; 'DATA'
                    336  RESTTK: EQU 0E5H         ; 'RESTORE'
                    337  NEXTOK  EQU 0F3H         ; 'NEXT'
                    338  DUMPTK: EQU 0FFH         ; 'COPY'
                    339
                    340  BORDPT: EQU 0FEH         ; OUTPUT PORT FOR SETTING BORDER COLOUR
                    341  PR_IN:  EQU 0FBH         ; FOR INPUT FROM PRINTER
                    342  PR_OUT: EQU 0FBH         ; FOR OUTPUT TO PRINTER
                    343  KB_PT:  EQU 0FEH         ; INPUT PORT FOR READING KEYBOARD
                    344  O_PORT: EQU 0FEH         ; OUTPUT PORT FOR TAPE
                    345  I_PORT: EQU 0FEH         ; INPUT PORT FOR TAPE
                    346   TAPE_I:EQU 6            ;    TAPE INPUT BIT IN (I_PORT)
                    347                  ;***ADDITIONAL
                    348  DKHSPT: EQU 0F4H         ; DOCK HORIZONTAL SELECT PORT
                    349  BDATPT: EQU 0FCH         ; EXPANSION BANK DATA PORT
                    350  BCMDPT: EQU 0FDH         ; EXPANSION BANK COMMAND PORT
                    351  HREXPT: EQU 0FFH         ; HOME ROM EXPANSION BANK PORT
                    352                  ;***
                    353
                    354                  ;OFFSETS FROM (CHANS) OF PERMANENT CHANNELS
                    355
                    356  CHAN_K: EQU 0            ; KEYBOARD
                    357  CHAN_S: EQU 5            ; TV SCREEN (UPPER HALF)
                    358  CHAN_R: EQU 10           ; RAM INSERTION
                    359  CHAN_P: EQU 15           ; ZX PRINTER
                    360
                    361  CH_SET: EQU 4000H-96*8   ; ADDRESS OF CHARACTER SET (STARTING WITH SPACE)
```

```
                  362  *EJECT
                  363
                  364                      ;CALCULATOR COMMANDS. IN THE DESCRIPTIONS, T & S STAND FOR
                  365                      ; THE TOP & SECOND FROM TOP ON THE CALCULATOR STACK.
                  366                      ; WHERE NECESSARY, FULLER DESCRIPTIONS CAN BE FOUND AT THE
                  367                      ; CODE FOR THE RELEVANT ROUTINES.
                  368
                  369                      ;THE FOLLOWING COMMANDS HAVE THE STACK POINTERS HL & DE (BUT
                  370                      ; NOT (STKNXT)) DECREMENTED FOR THEM BY CALCTR BEFORE THEY
                  371                      ; ARE CALLED (STKDWN).
                  372
                  373  IFJUMP: EQU 0   ;S,T -> S; RELATIVE JUMP CONDITIONAL ON VALUE OF T.
                  374  EXCH:   EQU IFJUMP+1     ;(EXCHANGE) S,T -> T,S
                  375  LOSE:   EQU EXCH+1       ;S,T -> S
                  376  SUB:    EQU LOSE+1       ;(SUBTRACT) S,T -> S-T
                  377  TIMES:  EQU SUB+1        ;S,T -> S*T
                  378  DIV:    EQU TIMES+1      ;(DIVIDE) S,T -> S/T
                  379  POWER:  EQU DIV+1        ;S,T -> S**T
                  380  OR:     EQU POWER+1      ;S,T -> S OR T (SEE OR).
                  381  AND:    EQU OR+1         ;S,T -> NUMERICAL S AND T (SEE NOAND).
                  382  GT:     EQU AND+4        ;S,T -> NUMERICAL S>T
                  383                           ;5 NUMERIC COMPARISON OPERATIONS HAVE NOT BEEN GIVEN
                  384                           ; MNEMONICS. S,T -> S^T WHERE ^ IS <=,>=,<>,>,< OR =
                  385                           ; SEE CMPRSN.
                  386  ADD:    EQU AND+7        ;S,T -> S+T
                  387  STGAND: EQU ADD+1        ;S$,T -> S$ AND$ T (SEE STGAND).
                  388                           ;6 STRING COMPARISON OPERATIONS WITHOUT MNEMONICS.
                  389  CONCAT: EQU STGAND+7     ;S$,T$ -> S$ +$ T$
                  390
                  391                      ;ORDINARY OPERATIONS WITHOUT STKDWN.
                  392
                  393  VALS:   EQU CONCAT+1     ;T$ -> VAL$ T$
                  394  USRS:   EQU VALS+1       ;T$ -> ADDRESS OF BIT PATTERN FOR CORRESPONDING
                  395                           ;    USER-DEFINED GRAPHIC
                  396  INKEY:  EQU USRS+1       ;T -> INKEY$ #T
                  397  NEGATE: EQU INKEY+1      ;T -> -T
                  398  CODE:   EQU NEGATE+1     ;T$ -> CODE T$
                  399  LO_MON: EQU CODE         ;OPERATION CODE FOR LO_MON
                  400  VAL:    EQU CODE+1       ;T$ -> VAL T$
                  401  LEN:    EQU VAL+1        ;T$ -> LEN T$
                  402  SIN:    EQU LEN+1        ;T -> SIN T
                  403  COS:    EQU SIN+1        ;T -> COS T
                  404  TAN:    EQU COS+1        ;T -> TAN T
                  405  ASN:    EQU TAN+1        ;T -> ARCSIN T
                  406  ACS:    EQU ASN+1        ;T -> ARCCOS T
                  407  ATN:    EQU ACS+1        ;T -> ARCTAN T
                  408  LN:     EQU ATN+1        ;T -> LN T
                  409  EXP:    EQU LN+1         ;T -> EXP T
                  410  INT:    EQU EXP+1        ;(INTEGER PART) T -> INT T
                  411  ROOT:   EQU INT+1        ;T -> SQUARE ROOT OF T
                  412  SGN:    EQU ROOT+1       ;T -> SGN T
                  413  ABS:    EQU SGN+1        ;(ABSOLUTE) T -> \T\
                  414  PEEK:   EQU ABS+1        ;T -> PEEK T
                  415  IN:     EQU PEEK+1       ;T -> IN T
```

```
               416  USR:    EQU IN+1          ;T -> USR T
               417  STR:    EQU USR+1         ;T -> STR$ T
               418  CHR:    EQU STR+1         ;T -> CHR$ T
               419  NOT:    EQU CHR+1         ;T -> BOOLEAN (T = 0)
               420  ZERO?:  EQU NOT
               421  DUP:    EQU NOT+1         ;(DUPLICATE) T -> T,T
               422  INTDIV: EQU DUP+1         ;(INTEGER DIVISION) S,T -> S MOD T, INT(S/T)
               423  JUMP:   EQU INTDIV+1      ;PROGRAMME CONTROL - RELATIVE JUMP BY FOLLOWING BYTE
               424  LITERAL:EQU JUMP+1        ;STACKS FOLLOWING NUMBER.
               425  LOOP:   EQU LITERAL+1     ;LIKE ZILOG DJNZ
               426  MINUS?: EQU LOOP+1        ;T -> BOOLEAN (T < 0)
               427  PLUS?:  EQU MINUS?+1      ;T -> BOOLEAN (T > 0)
               428  QUIT:   EQU PLUS?+1       ;RETURNS CONTROL TO Z80
               429  ANGLE:  EQU QUIT+1        ;T -> Y WHERE -1 <= Y <= +1 & SIN T = SIN (PI/2*Y)
               430                            ;  MEMORY 0 := TRUE IF T IN 2ND OR 3RD QUADRANT
               431  TRUNC:  EQU ANGLE+1       ;(TRUNCATE) T -> INTEGER TRUNCATION OF T TOWARDS 0.
               432  XEQTB:  EQU TRUNC+1       ;EXECUTES (BREG) AS A CALCULATOR INSTRUCTION
               433  XEY:    EQU XEQTB+1       ;S,T -> S * 10**T
               434  FLOAT:  EQU XEY+1         ;T FORCED INTO FLOATING POINT FORM
               435
               436                   ;THE FOLLOWING COMMANDS HAVE ADDED TO THEM AN OPERAND, N.
               437
               438  CBSV:   EQU 80H           ;SUMS N TERMS OF CHEBYSHEV SERIES (SEE CBSV).
               439  CONST:  EQU CBSV+20H      ;(CONSTANT) T -> T, NTH CALCULATOR CONSTANT
               440   MINUS1:EQU CONST+6       ;CALCTR CONSTANT EQUAL TO -1
               441  COPY:   EQU CONST+20H     ;T -> T; T COPIED TO NTH CALCULATOR MEMORY
               442  MEMORY: EQU COPY+20H      ;T -> T, CONTENTS OF NTH CALCULATOR MEMORY
               443
               444  OP_TK:  EQU LO_MON-LO_MON        ; TOKEN FOR MONADIC OPTR C IS OP_TK+C
               445  HI_MON: EQU OP_TK+CHR   ; TOKEN FOR LAST MONADIC OPTR EXCEPTING NOT
               446  MONOP:  EQU LO_MON.OR.0C0H       ;OPERATION CODE FOR LO_MON, TOP 2 BITS SET.
               447  LONOMO: EQU OP_TK+SIN   ; TOKEN FOR 1ST (NUMBER) NUMBER OPTR AFTER -
               448  HINOMO: EQU OP_TK+USR   ; TOKEN FOR LAST (NUMBER) NUMBER OPTR
               449
               450  *LIST ON
```

APPENDIX
C-1

TIMEX COMPUTER CORPORATION

APPLICATION DEVELOPMENT LIBRARY

Application Software Component 001

64-COLUMN MODE

Date: 12/15/83

ASC Number: 001

Version: 002

Author: Carol Corcoran

Name: 64 Column Mode Support

Description:

This component provides support to the application programmer for using the 64-column mode feature of the TS 2068. The services include opening/closing the second display file (moving the machine stack, OS RAM routines and BASIC structures), PRINT position control, attribute control, clear screen and scroll screen services and display of characters. For ease of use from BASIC, status is returned in the BC register pair, usually zero for successful completion and designated non-zero values for other conditions. The interface from BASIC is by means of POKE'ing the input parameters to designated RAM locations prior to invoking the service via the USR function. See page 4 of the code listing for the memory addresses to be used from BASIC with the support code loaded starting at Chunk 7 (E000H/57344).

Version Control

Version	Description	Date
001	Original	11/28/83
002	ADD: 1) Std. and User-Defined Graphics to WRCHAR and GTCHAR. 2) WRSTRG (Write String)	12/15/83

Application Services

Name: SETMODE (SETMDB from BASIC - parameter to VIMODE)

Input: MODE (0=normal , 6=64 column mode)

From machine code: Register A
From BASIC: In VIMODE

Description:

Sets specified video mode, opening or closing the second display file where needed. This involves determining if there is enough free RAM to open the second display file and if so, moving the BASIC structures and machine language variables area up and the UDG area down to make space for the machine stack and DS RAM routines at the top of memory. The second display file is cleared to zeroes. The affected system and internal variables are updated or initialized (see Usage Section). When returning to Mode 0 from 64 Column mode, the structures are returned to their normal locations.

Output: BC = 0 Successful
BC = 1 Invalid parameters (not equal to 0 or 6)
BC = 2 Not enough memory

Name: CLRSCN (CLRSCB from BASIC - parameters to CLSCTL)

Input: Line Count (1-24)
Starting Line Number (0-23)

From Machine Code: Line Count In Register B
Starting Line In Register C

From BASIC: Starting Line Number in CLSCTL
Line Count in CLSCTL + 1

Description:

Clears to background color (PAPER) the designated number of lines, beginning with the Starting Line Number. Line 0 with a count of 24 clears the entire screen. Upon return, the cursor position is at the beginning of the first line cleared.

Output: BC = 0 for successful completion
BC = 1 invalid parameters
(Line Number + Line Count <1 or >24)

ASC Number: 001

Name: SETCUR (SETCUB from BASIC - parameters to LINCOL)

```
Input:  Line Number (0-23)
        Column Number (0-63)

From Machine Code:  Line Number In Register B
                    Column Number In Register C

       From BASIC:  Column Number In LINCOL
                    Line Number In LINCOL + 1
```

Description:

Converts the requested position to internal format, determines display file address, and stores the values for use by the next display character operation. Note that once established, the position is updated automatically when a character is displayed so that it is only necessary to set the position when sequential display is not desired.

```
Output:  BC = 0 for successful completion
         BC = 1 for invalid parameters (Line Number > 23 ,
                                Column Number > Line Length-1)
```

ASC Number: 001

Name: SETATT (SETATB from BASIC - parameter to ATTCTL)

```
Input:  Attribute Byte  -  bit 7 - FLASH
                           bit 6 - BRIGHT
                           bit 5 - P
                           bit 4 -  A
                           bit 3 -   PER
                           bit 2 - I
                           bit 1 -  N
                           bit 0 -   K

From Machine Code:  Register A
       From BASIC:  In ATTCTL
```

Description:

The specified INK color (0-7) is used to set the video mode hardware and to update VIDMOD. The complementary PAPER color is fixed by the INK selection. FLASH and BRIGHT are fixed at zero by the hardware. Note that in 64 column mode the entire screen has the same attributes.

Output: BC = 0 Successful

ASC Number: 001

- -

Name: SETMSK (SETMSB from BASIC - paramters to MSKCTL)

Input: Mask Byte - bit 0 - OVER
bit 2 - INVERSE

From Machine Code: Register A

From BASIC: MSKCTL

Description:

The specified mask is stored for application to all subsequent display character operations. (OVER = 1 implies new character combined with old using an XOR operation; INVERSE = 1 implies character is inverted).

Output: BC = 0 for successful completion

- -

ASC Number: 001

- -

Name: WRCHR (WRCHB from BASIC - parameter to DATAB)

Input: Character code for character to be displayed

20H TO 7FH - Std. TS2068 Character Set
80H TO 8FH - Std. Graphics Set
90H TO A4H - User-Defined Graphics Set

From Machine Code: Register A

From BASIC: in DATAB

Description:

Displays character at current cursor position, applying current mask. Moves cursor position on to next sequential position. If character would start a new line after BOTLN (see Usage section) and the scroll count (variable SCRLCT) decrements to zero, the character will not be displayed and return will be made with BC = 3 (screen full). If the scroll count does not decrement to zero, the screen will be scrolled up one line using the information in SCRCTL and the new line started at the vacated line.

Output: BC = 0 for successful completion
BC = 1 invalid character code
BC = 3 for screen full

- -

Name: WRSTRG (WRSTRB from BASIC - String Identifier in PARAM$)

Input: Character Code String

From machine code: Address of string in HL
Count in BC

From BASIC: String Variable Identifier in
System Variable PARAM$ - 23747 (5CC3H)

Description:

Displays the characters from the string, beginning at the current cursor location and continuing sequentially until the count expires, or 'Screen Full' is detected (see WRCHR description and Usage Section on Automatic Scrolling). For the Screen Full condition, the remaining count is stored in the internal variable STRGCT for access by the user.

NOTE: Characters within the string which are outside of the supported range (32 through 164 (20H-A4H)) will be ignored. E.g., BASIC Token codes and control codes embedded in an INPUT string will not be displayed or decoded.

From BASIC, POKE the code for the string variable identifier into PARAM$ prior to invoking WRSTRB, e.g.

```
0005  LET a$="-----string------"
0010  POKE 23747,CODE "a"
0015  IF USR (WRSTRB)<>0 THEN -----
         (continue)
```

Output:
BC = 0 Successful
BC = 2 BASIC - String not found
BC = 3 Screen Full - Remaining Count in STRGCT
(HL=Current Address in String)

Name: SCROLL (SCRLB from BASIC - parameters to SCRCTL)

Input: Line Count (1-23)
Starting Line Number (1-23)

From Machine Code: Line Count In B
Starting Line In C
From BASIC: Starting Line In SCRCTL
Line Count In SCRCTL + 1

Description:

Scrolls the designated number of lines up 1 position, starting at the specified line number and inserts a blank line at the bottom of the scrolled area. Line 1 with a count of 23 will scroll the entire screen up 1 line. Upon return, the cursor position is at the beginning of the inserted blank line.

Note: See Usage Section on 'automatic' scrolling.

Output: BC = 0 Successful
BC = 1 Invalid Parameters
(Line Number + Line Count < 1 or > 24)

Name: GTCHAR (GTCHRB from BASIC - parameters to GETCTL)

Input: Line/Column position as for SETCUR

From Machine Code: Line Number in B
Column Number in C

From BASIC: Column Number in GETCTL
Line Number in GETCTL + 1

Description:

Returns in register C of the BC register pair the character code for the character at the designated screen position. If no match against the character set (including the standard and user-defined graphics) is found, zero is returned. (Character code or zero also returned in A.)

Note: Positions 'printed' using the OVER technique will return zero if they do not match against any single character.

Output: BC = 0 for no find
BC = 1 invalid parameters
BC = character code (20H-A4H)

Name: GETATT (GETATB from BASIC - parameters to GETCTL)

Input: As for GTCHAR

Description:

Returns in register C of the BC register pair the attribute byte for the character at the designated screen position. Note that in 64 column mode the entire screen has common attributes. The value returned will describe the current selection:

Output: BC = 1 for invalid parameters
BC = attribute byte (as for SETATT)

Name: GETCUR (GETCUB from BASIC)

Input: None

Description:

Returns in the BC register pair and in the BASIC parameter location LINCOL, the current print position (where the next character would be displayed).

Output: B = Line number (0-23)
C = Column number (0-63)

BASIC: LINCOL - Column number
LINCOL + 1 - Line number

NOTE: If the last character was printed at Col.63 of Line 23 (last position on the screen), then Col.0/Line 23 will be returned.

Usage:

Memory Usage:

This package of machine code routines includes the following internal variables:

Name	Size	Description
SCRCTL	2	Scroll Control LSB = Starting line number MSB = Number of lines to be scrolled
BOTLN	1	Bottom Line - Line number (0-23) after which test for scroll will be made.
SCRLCT	1	Scroll Count- Number of times + 1 that automatic scroll will be done. When decremented to zero, data will not be displayed and a condition code will be returned to user.
CHTBL	2	Character Table (Base Address-100H)
GRTBL	2	Std.Graphics Character Table (Base-100H)
LINLEN	1	Line Length - (64 when in 64-Col.Mode)
CURPOS	2	Current Position (Internal Format) LSB = Column Position MSB = Line Position
DFADDR	2	Current Display File Address
MASKB	1	Mask Byte (bit 0 = OVER) (bit 2 = INVERSE)
ATTBYT	1	Attribute Byte (bits 0 - 2 - INK) (bits 3 - 5 - PAPER) (bit 6 - BRIGHT (Set to zero (bit 7 - FLASH by H/W in 64-col.mode)
GTINDX	1	'Get' Index - Used by GTCHAR
STRGCT	2	String Count - Contains remaining byte count
;		when BC=3 (Screen Full) is
;		returned from the Write String
;		service WRSTRG (WRSTRB).

Initial values set via SETMODE (SETMDB) are as follows:

Variable Name	Value
SCRCTL	1701H
BOTLN	17H
SCRLCT	1H
CHTBL	3C00H
GRTBL	(Internal to Module)
LINLEN	40H
CURPOS	1841H
DFADDR	4000H
MASKE	0H
ATTBYT	38H
GTINDX	80H
STRGCT	0H

The following are the variables used for passing parameters in BASIC. The * indicates those initialized by SETMDB:

Variable Name	Size	Value
* DATAB	1	0H
* LINCOL	2	0H
* CLRCTL	2	1800H
* ATTCTL	1	38H
* MSKCTL	1	0H
* GETCTL	2	0H
VIMODE	1	

In addition, VIDMOD, PARAM$ and other system variables must be available to these routines. At minimum, chunks 0-3 and chunk 7 must be enabled in the Home Bank.

Location:

This package can be incorporated into a machine code program within the memory range from chunk 4 through 7, taking into consideration the remapping of certain structures when the second display file is open. NOTE: Machine code above RAMTOP is not moved.

The routine SETMODE (SETMDB) cannot be executed from a cartridge because of the necessity to enable the ROM Extension which disables the DOCK Bank.

Registers:

Other than as documented for output values, no claims are made as to preservation of any register contents except for the IY Register which must always contain the value 5C3AH for access to the standard system variables.

Automatic Scrolling:

As initialized, test for scrolling will be made when the print position goes to the next line following the bottom line on screen (BOTLN=23=24th line). Condition Code 3 (Screen Full) will be returned since SCRLCT will decrement to zero. If SCRLCT is set to some larger value, then the parameters in SCRCTL will be used to automatically scroll the designated number of lines beginning at the specified line number. As initialized, this will scroll the entire screen up. By performing a POKE or setting the variables BOTLN and SCRCTL to the desired values, automatic scrolling can be done using smaller sections of the screen. When working from BASIC it is recommended that BOTLN be set to Line 21 (15H) and SCRCTL+1 be set to 21 (15H) to avoid conflict with the Edit Line which uses the bottom two lines of the screen. Note that once SCRLCT expires, it will be set to 1. If a different value is desired, it must be reinitialized by the user after receiving the 'Screen Full' condition.

By setting the SCRCTL variable and invoking the SCROLL (SCRLB) routine any portion of the screen may be scrolled at any time.

NOTES:

1. All screen operations done by the system ROM (PRINT, LIST, Edit line I/O, CLS, scrolling, etc.) relate only to the main Display File. This means that only the even columns on the 64-column mode screen will be affected. You will want to execute the Clear Screen function in this module to guarantee that no data in the second display file interferes with the use of a system screen service, e.g. prior to doing a LIST.

2. The COPY command will print only the even columns of the screen to the 2040 Printer.

3. During tape operations, the Border will not change while in 64-column mode since this is fixed by the hardware to conform to the paper color.

4. The SAVE filename SCREEN$ will save only the main Display File data. The second can be saved by a SAVE filename CODE 24576, 6144. Be careful that you have the computer in 64-column mode when you load this data or you will overwrite the OS RAM routines and "crash" the system!! (The count for saving the display file is for the data portion only since the Attribute File area from 7800H-7AFFH (30720-31487) is not used by the video mode H/W in 64-Column mode.

APPENDIX
C-1

```
        NAME ADL - ASC 001 64-COL.MODE SUPPORT
;
;
;
;
;
;
;
;
;                 *************************************
;                 *                                   *
;                 *               TIMEX               *
;                 * APPLICATION DEVELOPMENT LIBRARY   *
;                 *                                   *
;                 * NAME: 64-COL.MODE SUPPORT         *
;                 *                                   *
;                 * ASC NO:  001                      *
;                 * VERSION: 002                      *
;                 * AUTHOR:  C. CORCORAN              *
;                 * DATE:    12/15/83                 *
;                 *************************************
```

```
        SUBTTL VERSION LEVEL CONTROL
;
;
;       VERSION         DATE            COMMENTS
;       -------         ----            --------
;
;         001           11/28/83        ORIGINAL
;
;         002           12/15/83        ADD STANDARD AND USER-DEFINED
;                                       GRAPHICS TO WRCHAR AND GTCHAR
;
;                                       ADD WRSTRG (WRITE STRING)
;                                       CAPABILITY
```

```
                                        37              SUBTTL DEFINITIONS
                                        38      ;
                                        39      ;
                                        40      ;
                                        41      ;                               ****DEFINITIONS****
                                        42      ;
                                        43              INTERN  WRCHAR,WRSTRG,SETCUR,SETATT,SETMSK,CLRSCN,SCROLL
                                        44              INTERN  GTCHAR,GETATT,GETCUR
                                        45              INTERN  WRCHRB,WRSTRB,SETCUB,SETATB,SETMSB,CLRSCB,SCRLB
                                        46              INTERN  GTCHRB,GETATB,GETCUB
                                        47              INTERN  SETMODE,SETMOB
                                        48      ;
        =0018                           49      SCRSZ           EQU     24      ; 24 LINES
        =1701                           50      SCINIT          QU      1701H   ; SCROLL CONTROL INITIALIZATION
        =1800                           51      CLINIT          EQU     1800H   ; CLEAR SCREEN CTL. INIT.
        =3C00                           52      CHRSET          EQU     3C00H   ; ROM CHAR.TABLE-100H
        =0395'                          53      GRPHST          EQU     ((GRPST)-100H) ;STD.GRAPHICS CHARS.
                                        54      ;
        =0E8E                           55      CHNGVID         EQU     0E8EH   ; ROUTINE IN ROM EXTENSION
        =1720                           56      RECLEN          EQU     1720H   ; ROUTINE IN HOME ROM
                                        57      ;
        =00FF                           58      HREXPT          EQU     0FFH    ; HOME ROM EXT.SELECT PORT (BIT 7)
        =00F4                           59      DKHSPT          EQU     0F4H    ; DOCK HORIZONTAL SELECT PORT
                                        60      ;
        =5C48                           61      VARS            EQU     5C48H   ; SYSTEM VARIABLES
        =5C65                           62      STKEND          EQU     5C65H   ;
        =5C7B                           63      UDG             EQU     5C7BH   ;
        =5C7D                           64      COORDS          EQU     5C7DH   ;
        =5CB2                           65      RAMTOP          EQU     5CB2H   ;
        =5CB4                           66      PRAMT           EQU     5CB4H   ;
        =5CC2                           67      VIDMOD          EQU     5CC2H   ;
        =5CC3                           68      PARAMS          EQU     5CC3H   ; (LOCATION 23747)
        =6840                           69      DRIVES          EQU     6840H   ;
        =12C0                           70      INSERTSZ        EQU     7B00H-DRIVES
        =0840                           71      MOVESZ          EQU     DRIVES-6000H
        =F7C0                           72      DEST7           EQU     0FFFFH-MOVESZ+1
        =97C0                           73      FIX             EQU     DEST7-6000H
                                        74
        =1000                           75      FIXTBL          EQU     1000H
                                        76
                                        77
```

```
                                        79              SUBTTL INPUTS AND ENTRIES
                                        80      ;
                                        81      ;
                                        82      ;
                                        84      ;
                                        85      ;
                                        86      ;               **PARAMETER INPUTS AND ENTRY POINTS FROM BASIC**
                                        87      ;
                                        88      ;                                                       WITH
                                        89      ;                                               MODULE LOADED
                                        90      ;                                               AT 57344(E000H)
                                        91      ;                                               DECIMAL ADDRESS
                                        92      ;                                               ---------------
     0000'  20                          93      DATAB           DEFB    20H     ; DATA BYTE FROM BASIC          57344
     0001'  C3 0030'                    94      WRCHRB:         JP      WRCH0   ; ENTRY TO WRITE CHARACTER      57345
     0004'  C3 00EC'                    95      WRSTRB:         JP      WRSTR0  ; ENTRY TO WRITE STRING         57348
                                        96      ;                               ; (see PARAMS above)
     0007'  0000                        97      LINCOL          DEFW     0      ; SET CURSOR PARAMETERS
                                        98                                      ;   LINCOL=COL. (0-63)          57351
                                        99                                      ;   LINCOL+1=LINE (0-23)        57352
     0009'  C3 0135'                   100      SETCUB:         JP      SETCB0  ; ENTRY TO SET CURSOR POSN.     57353
     000C'  1800                       101      CLRCTL          DEFW    1800H   ; CLEAR SCREEN CONTROLS
                                       102                                      ;   CLRCTL=STARTING LINE NO.    57356
                                       103                                      ;   CLRCTL+1=LINE COUNT         57357
     000E'  C3 01F3'                   104      CLRSCB:         JP      CLRSB0  ; ENTRY TO CLEAR SCREEN         57358
     0011'  38                         105      ATTCTL          DEFB    38H     ; ATTRIBUTE CONTROL             57361
                                       106                                      ;   BIT 7=FLASH (0 IN 64-COL.)
                                       107                                      ;       6=BRIGHT(0 IN 64-COL.)
                                       108                                      ;       5
                                       109                                      ;       4=PAPER COLOR
                                       110                                      ;       3
                                       111                                      ;       2
                                       112                                      ;       1= INK COLOR
                                       113                                      ;       0
     0012'  C3 026E'                   114      SETATB:         JP      SETAB0  ; ENTRY TO SET ATTRIBUTES       57362
     0015'  00                         115      MSKCTL          DEFB    0       ; MASK CONTROL FROM BASIC:      57365
                                       116                                      ;   BIT 2=INVERSE
                                       117                                      ;       0=OVER
     0016'  C3 0298'                   118      SETMSB:         JP      SETMB0  ; ENTRY TO SET MASK CONTROLS    57366
     0019'  0000                       119      GETCTL          DEFW     0      ; 'GET' CONTROL FROM BASIC      57369
                                       120                                      ; FORMAT IS AS FOR LINCOL
     001B'  C3 02A1'                   121      GTCHRB:         JP      GTCHB0  ; ENTRY TO GET CHARACTER        57371
     001E'  C3 0321'                   122      GETATB:         JP      GETAB0  ; ENTRY TO GET ATTRIBUTE        57374
     0021'  C3 0328'                   123      GETCUB:         JP      GETCB0  ; ENTRY TO GET CURSOR POSN.     57377
     0024'  00                         124      VIMODE          DEFB    0       ; VIDEO MODE CONTROL            57380
                                       125                                      ;       0=NORMAL
                                       126                                      ;       6=64-COL.MODE
     0025'  C3 0345'                   127      SETMOB:         JP      STMOB0  ; ENTRY TO SET VIDEO MODE       57381
     0028'  1701                       128      SCRCTL          DEFW     1701H  ; SCROLL CONTROL
                                       129                                      ;   SCRCTL=STARTING LINE NO.    57384
                                       130                                      ;   SCRCTL+1=LINE COUNT         57385
     002A'  C3 0145'                   131      SCRLB:          JP      SCRLB0  ; ENTRY TO SCROLL               57386
```

```
                                SUBTTL  OTHER VARIABLES
                        ;
                        ;
                        ;
                        ;
0020'   17              BOTLN           DEFB    17H     ; BOTTOM LINE (LINE AFTER      57389
                                                        ; WHICH SCREEN IS CONSIDERED
                                                        ; FULL.  AUTOMATIC SCROLL
                                                        ; WILL BE DONE IF SCRLCT
                                                        ; DOES NOT DECREMENT TO 0.
002E'   01              SCRLCT          DEFB    1       ; SCROLL COUNT - 1 PLUS NO.    57390
                                                        ; OF TIMES AUTOMATIC SCROLL
                                                        ; WILL BE DONE.
                        ;
                        ;
                        ;
                        ;
002F'   3C00            CHTBL           DEFW    CHRSET  ; ADDRESS OF CHARACTER TABLE  57391
                                                        ; (DEFAULTS TO TS2068 SYSTEM
                                                        ;  ROM)
0031'   0395'           GRTBL           DEFW    GRPHST  ; ADDRESS OF STD.GRAPHICS TBL.57393
0033'   40              LINLEN          DEFB    40H     ; LINE LENGTH (64)             57395
0034'   1841            CURPOS          DEFW    1841H   ; CURRENT POSITION (INTERNAL  57396
                                                        ;  FORMAT)
0036'   4000            DFADRS          DEFW    4000H   ; CURRENT DISPLAY FILE ADDRS. 57398
0038'   00              MASKB           DEFB    0       ; MASK TO BE APPLIED TO       57400
                                                        ; DISPLAY CHARACTERS
0039'   38              ATTBYT          DEFB    38H     ; CURRENT ATTRIBUTES          57401
                                                        ;  (BLACK ON WHITE)
003A'   80              GTINDX          DEFB    80H     ; INDEX FOR ADJUSTING         57402
                                                        ; CH.CODE IN GTCHAR
003B'   0000            STRGCT          DEFW    0       ; REMAINING COUNT FROM WRSTRG
                        ;                               ; WHEN 'SCREEN FULL'          57403
```

```
                                SUBTTL  WRITE CHARACTER
                        ;
                        ;
003D'                   WRCHO:                          ; HERE FROM BASIC ENTRY TO DISPLAY THE
                                                        ; CHARACTER WHOSE CODE IS IN 'DATAB'
003D'   3A 0000'                LD      A,(DATAB)
                        ;
0040'                   WRCHAR:                         ; ENTRY WITH CODE IN A
0040'   CD 048D'                CALL    LDPOSN          ; LOAD REGISTERS FOR CURRENT POSITION
                                                        ;   BC=CURSOR POSITION FROM 'CURPOS'
                                                        ;   HL=DISPLAY FILE ADDRESS FROM 'DFADRS
                                                        ;   A=CODE FOR CHAR. TO BE DISPLAYED
0043'   FE 20                   CP      20H             ; TEST VALID RANGE
0045'   DA 00C2'                JP      C,INVPAR        ; < 20H
0048'   FE A5                   CP      0A5H            ;
004A'   D2 00C2'                JP      NC,INVPAR       ; > A4H
004D'   C5                      PUSH    BC              ; SAVE CURSOR POSITION
004E'   FE 80                   CP      80H             ; TEST IF ASCII PRINTABLE (20H-7FH)
0050'   38 15                   JR      C,WRCH12        ; YES
0052'   FE 90                   CP      90H             ; TEST IF STD.GRAPHICS(80H-8FH)
0054'   38 09                   JR      C,WRCH11
0056'   ED 4B 5C7B              LD      BC,(UDG)        ; USER-DEFINED GRAPHICS(90H-A4H)
005A'   05                      DEC     B               ; ADJUST ADDRESS-100H
005B'   D6 70                   SUB     70H             ; ADJUST FOR INDEX INTO TABLE
005D'   18 0C                   JR      WRCH13
005F'   ED 4B 0031'     WRCH11  LD      BC,(GRTBL)      ; ADDRESS OF GRAPHICS TABLE
0063'   D6 60                   SUB     60H             ; ADJUST FOR INDEX INTO TABLE
0065'   18 04                   JR      WRCH13
0067'   ED 4B 002F'     WRCH12  LD      BC,(CHTBL)      ; CHARACTER TABLE
006B'   EB              WRCH13  EX      DE,HL           ; DE=POSN.IN DISPLAY FILE
006C'   26 00                   LD      H,0
006E'   6F                      LD      L,A             ; CODE IS INDEX INTO TABLE
006F'   29                      ADD     HL,HL
0070'   29                      ADD     HL,HL
0071'   29                      ADD     HL,HL
0072'   09                      ADD     HL,BC           ; HL=PIXEL PATTERN IN TABLE
0073'   C1                      POP     BC
0074'   EB                      EX      DE,HL
0075'   79                      LD      A,C             ; TEST IF END OF LINE
0076'   3D                      DEC     A
0077'   3A 0033'                LD      A,(LINLEN)
007A'   20 05                   JR      NZ,WRCH14
007C'   3C                      INC     A               ; START OF NEW LINE
007D'   05                      DEC     B               ; BUMP LINE NO.
007E'   4F                      LD      C,A             ; LINLEN+1=START OF LINE
007F'   18 01                   JR      WRCH15
0081'   3C              WRCH14  INC     A
0082'   B9              WRCH15  CP      C               ; TEST IF START OF LINE
0083'   D5                      PUSH    DE
0084'   CC 00C6'                CALL    Z,TVFULQ        ; TEST IF OFF SCREEN
0087'   D1                      POP     DE
                                                        ; HERE TO PUT CHARACTER IN DISPLAY FILE
```

```
0088'  C5         WRCH2   PUSH  BC            ; CURSOR POSITION
0089'  E5                 PUSH  HL            ; DISPLAY FILE ADRS.
008A'  3A 0039'           LD    A,(MASKB)
008D'  06 FF              LD    B,-1
008F'  1F                 RRA
0090'  38 01              JR    C,WRCH3       ; IF XORING NEW INTO OLD
0092'  04                 INC   B             ; B=-1 IF XORING  =0 IF NOT
0093'  1F         WRCH3   RRA
0094'  1F                 RRA
0095'  9F                 SBC   A,A
0096'  4F                 LD    C,A           ; C=-1 FOR INVERSE  =0 IF NOT
0097'  3E 08              LD    A,8           ; SCAN COUNT
0099'  A7                 AND   A
009A'  EB                 EX    DE,HL
009B'  08         WRCH5   EX    AF,AF'
009C'  1A                 LD    A,(DE)        ; OLD BIT ROW
009D'  A0                 AND   B
009E'  AE                 XOR   (HL)
009F'  A9                 XOR   C             ; INVERT IF C=-1
00A0'  12                 LD    (DE),A        ; UPDATE DISPLAY FILE
00A1'  08                 EX    AF,AF'
00A2'  14                 INC   D             ; NEXT SCAN
00A3'  23                 INC   HL            ; NEXT BYTE IN CHAR.FILE
00A4'  3D                 DEC   A             ; TEST IF MORE SCANS
00A5'  20 F4              JR    NZ,WRCH5
00A7'  E1         WRCH7   POP   HL
00A8'  C1                 POP   BC
00A9'  0D                 DEC   C             ; ADJUST CURSOR POSITION
00AA'  79                 LD    A,C           ; TEST IF EVEN/ODD
00AB'  CB 47              BIT   0,A
00AD'  20 06              JR    NZ,CCLODD
00AF'  7C         CCLEVN  LD    A,H
00B0'  F6 20              OR    20H
00B2'  67                 LD    H,A
00B3'  18 05              JR    WRCHXT
00B5'  7C         CCLODD  LD    A,H
00B6'  E6 DF              AND   0DFH
00B8'  67                 LD    H,A
00B9'  23                 INC   HL            ; DF1 NEXT BYTE
00BA'  CD 0485'   WRCHXT  CALL  STPOSN        ; STORE NEW POSITION
00BD'  0E 00      GOODRET LD    C,0           ; RETURN BC=0
00BF'  06 00      ERRRET  LD    B,0           ; ENTER HERE WITH C NON-ZERO
00C1'  C9                 RET
                  ;
00C2'  0E 01      INVPAR  LD    C,1           ; RETURN BC=1 FOR INVALID PARAMETERS
00C4'  18 F9              JR    ERRRET
                  ;
00C6'  3E 18      TVFULQ  LD    A,SCRSZ       ; TEST IF NEW LINE IS OFF SCREEN
00C8'  90                 SUB   B             ; A=LINE NO.
00C9'  57                 LD    D,A           ; SAVE IN D
00CA'  3A 002D'           LD    A,(BOTLN) ; GET BOTTOM LINE
00CD'  BA                 CP    D
```

```
00CE'  D2 0456'           JP    NC,UPDPOSN    ; ON SCREEN - RETURN TO WRITE CHAR.
                                              ;  VIA UPDATE AND STORE POSITION
00D1'  3A 002E'           LD    A,(SCRLCT)    ; TEST SCROLL COUNT
00D4'  3D                 DEC   A
00D5'  20 0B              JR    NZ,TVFUL1     ; DO AUTOMATIC SCROLL USING SCRCTL
00D7'  3E 01              LD    A,1           ; REINITIALIZE TO 1
00D9'  32 002E'           LD    (SCRLCT),A
00DC'  C1                 POP   BC
00DD'  C1                 POP   BC            ; DISCARD RETURN TO WRITE CHAR.
00DE'  0E 03              LD    C,3           ; RETURN BC=3 FOR SCREEN FULL
00E0'  18 DD              JR    ERRRET
00E2'  32 002E'   TVFUL1  LD    (SCRLCT),A    ; UPDATE VARIABLE
00E5'  ED 4B 0028'        LD    BC,(SCRCTL)   ; GET SCROLL CONTROLS (STARTING LINE
                                              ;   AND LINE COUNT)
00E9'  C3 015F'           JP    SCRLO         ; RETURN TO WRITE CHAR. VIA SCROLL
                  ;
```

```
                                         SUBTTL WRITE STRING
                                 ;                               ; HERE FROM BASIC ENTRY TO
                                 ;                               ; WRITE CHARACTER STRING TO SCREEN.
                                 ;                               ; STRING IDENTIFIER (CH.CODE) IN
                                 ;                               ; SYSTEM VARIABLE PARAMS AT 5CC3H
     00EC'  3A 5CC3              WRSTR0  LD    A,(PARAMS)        ; GET STRING ID
     00EF'  E6 1F                        AND   1FH               ; MASK OFF UPPER BITS
     00F1'  F6 40                        OR    40H               ; STRING VARIABLE IDENTIFIER
     00F3'  57                           LD    D,A               ; SAVE IN D
     00F4'  2A 5C4B                      LD    HL,(VARS)         ; FIND STRING
     00F7'  7E                   WRSTR1  LD    A,(HL)            ;
     00F8'  E6 7F                        AND   07FH              ; TEST IF END OF VARS AREA
     00FA'  28 35                        JR    Z,NOSTRG          ; NO FIND - RETURN BC=2
     00FC'  BA                           CP    D                 ; TEST IF MATCH
     00FD'  28 08                        JR    Z,WRSTR2          ; FOUND STRING
     00FF'  D5                           PUSH  DE                ; SAVE STRING ID
     0100'  CD 1720                      CALL  RECLEN            ; RETURNS ADRS. OF NEXT VAR. IN DE
     0103'  EB                           EX    DE,HL             ; ADRS. TO HL
     0104'  D1                           POP   DE                ; RESTORE STRING ID
     0105'  18 F0                        JR    WRSTR1            ; LOOK AGAIN
     0107'  23                   WRSTR2  INC   HL                ; GET LENGTH
     0108'  4E                           LD    C,(HL)
     0109'  23                           INC   HL
     010A'  46                           LD    B,(HL)
     010B'  23                           INC   HL                ; FIRST TEXT CODE
     010C'  78                           LD    A,B               ; TEST IF NULL STRING
     010D'  B1                           OR    C
     010E'  C8                           RET   Z                 ; RETURN IF SO
                                 ;
                                 ;
                                 ;                               ; ENTRY FROM MACHINE CODE WITH
                                 ;                               ; ADDRESS OF CHAR.CODE 'STRING'
                                 ;                               ; IN HL AND LENGTH IN BC
                                 ;
     010F'  7E                   WRSTRG  LD    A,(HL)            ; GET CODE
     0110'  E5                           PUSH  HL                ; SAVE ADDRESS
     0111'  C5                           PUSH  BC                ; AND COUNT
     0112'  CD 0040'                     CALL  WRCHAR            ; WRITE 'A'
     0115'  79                           LD    A,C               ; TEST IF GOOD
     0116'  B0                           OR    B
     0117'  20 09                        JR    NZ,WRSTX1         ; EXIT IF INVALID CODE OR
                                 ;                               ; IF SCREEN FULL
     0119'  C1                   WRSTR3  POP   BC                ; COUNT
     011A'  E1                           POP   HL                ; ADDRESS
     011B'  23                           INC   HL                ; NEXT CHAR.
     011C'  0B                           DEC   BC                ; ADJUST COUNT
     011D'  78                           LD    A,B               ; TEST IF DONE
     011E'  B1                           OR    C
     011F'  20 EE                        JR    NZ,WRSTRG         ; WRITE NEXT CHAR.
     0121'  C9                           RET                     ; RETURN BC=0
                                 ;
     0122'  79                   WRSTX1  LD    A,C               ; SAVE ERROR
```

```
     0123'  FE 01                        CP    1                 ; TEST IF UNRECOGNIZED CODE
     0125'  28 F2                        JR    Z,WRSTR3          ; CONTINUE
     0127'  E1                           POP   HL                ; REMAINING COUNT TO HL
     0128'  22 0038'                     LD    (STRGCT),HL       ; STORE REMAINING COUNT
     012B'  E1                           POP   HL                ; ADDRESS TO HL
     012C'  0E 03                        LD    C,3               ; RETURN BC=3
     012E'  06 00                WRSTX2  LD    B,0
     0130'  C9                           RET
                                 ;
     0131'  0E 02                NOSTRG  LD    C,2               ; RETURN BC=2 IF STRING NOT FOUND
     0133'  18 F9                        JR    WRSTX2
                                 ;
```

```
                        SUBTTL POSITION CONTROL
                ;
0135'           SETC80:                             ; HERE FROM BASIC ENTRY.  PARAMETERS
                                                    ; IN LINCOL
0135'  ED 4B 0007'              LD   BC,(LINCOL)
                ;
0139'           SETCUR:                             ; ENTRY WITH LINE/COL. IN BC REG.
0139'  CD 043A'                 CALL   TSTPAR       ; TEST PARAMETERS FOR VALIDITY
013C'  CD 044B'                 CALL   CONVFM       ; CONVERT TO INTERNAL FORMAT
013F'  CD 0456'                 CALL   UPDPOSN      ; CALCULATE AND STORE POSITION
0142'  C3 0080'                 JP     GOODRET      ; RETURN BC=0
                ;
```

```
                        SUBTTL SCROLL
                ;
                ;
                ;
0145'           SCRL80:                             ; HERE FROM BASIC ENTRY TO SCROLL
                ;                                   ; SCREEN
0145'  ED 4B 0028'              LD   BC,(SCRCTL)    ; GET CONTROL INFO.
                ;
0149'           SCROLL:                             ; HERE WITH CONTROLS IN BC
                                                    ;  B=NO. OF LINES
                                                    ;  C=STARTING LINE NO.
0149'  78                       LD   A,B            ; TEST VALIDITY
014A'  A7                       AND  A              ;
014B'  CA 00C2'                 JP   Z,INVPAR       ; ERROR IF COUNT=0
014E'  81                       ADD  A,C
014F'  FE 01                    CP   1
0151'  DA 00C2'                 JP   C,INVPAR       ; ERROR IF B+C<1
0154'  FE 19                    CP   25
0156'  D2 00C2'                 JP   NC,INVPAR      ; ERROR IF B+C>24
0159'  CD 015F'                 CALL  SCRL0         ; DO SCROLL
015C'  C3 0080'                 JP    GOODRET       ; RETURN BC=0
                ;
015F'  C5       SCRL0   PUSH  BC
0160'  3E 18            LD    A,SCRSZ               ; GET STARTING LINE IN INTERNAL FORMAT
0162'  91               SUB   C
0163'  47               LD    B,A
0164'  3A 0033'         LD    A,(LINLEN)
0167'  3C               INC   A                     ; COL. 0
0168'  4F               LD    C,A
0169'  CD 0474'         CALL  LNSU
016C'  C1               POP   BC
016D'  C5               PUSH  BC                    ; SAVE ORIG.BC FOR EXIT
016E'  7C       TESTAC  LD    A,L                   ; TEST IF AT START OF BLOCK
016F'  A7               AND   A
0170'  28 51            JR    Z,STBLK               ; YES
0172'  07               RLCA
0173'  07               RLCA
0174'  07               RLCA
0175'  4F               LD    C,A                   ; GET NO. OF LINES THIS BLOCK
0176'  3E 08            LD    A,8
0178'  91               SUB   C
0179'  B8               CP    B                     ; TEST AGAINST TOTAL LINES
017A'  38 3F            JR    C,GRBLK               ; TOTAL GREATER THAN THIS BLOCK
017C'  78       INSDBLK LD    A,B
017D'  06 00            LD    B,0                   ; REMAINING COUNT
017F'  C5               PUSH  BC
0180'  47       LOOP    LD    B,A                   ; B=LINES THIS BLOCK
0181'  0E 08            LD    C,8                   ; C=SCAN COUNT
0183'  78       LOOP0   LD    A,B
0184'  C5               PUSH  BC                    ; SAVE SCAN COUNT
0185'  0F               RRCA
0186'  0F               RRCA
```

```
0187'  0F                       RRCA                    ; CALCULATE NO. OF BYTES
0188'  4F                       LD    C,A
0189'  06 00                    LD    B,0               ; BC=32*# OF LINES
018B'  EB               LOOP1   EX    DE,HL
018C'  21 FFE0                  LD    HL,-20H           ; GET ADRS. OF PREV. LINE
018F'  19                       ADD   HL,DE
0190'  EB                       EX    DE,HL             ; TO DE
0191'  C5                       PUSH BC          ; SAVE COUNT
0192'  E5                       PUSH HL          ; SAVE ADDRESS
0193'  ED B0                    LDIR             ; DO MOVE
0195'  E1                       POP   HL
0196'  C1                       POP   BC
0197'  7C                       LD    A,H
0198'  CB 6F                    BIT   5,A               ; TEST IF OF1
019A'  20 05                    JR    NZ,NXTSC          ; NO
019C'  F6 20                    OR    20H
019E'  67                       LD    H,A               ; DO OF2
019F'  18 EA                    JR    LOOP1
01A1'  E6 DF            NXTSC   AND   0DFH              ; BACK TO OF1
01A3'  67                       LD    H,A
01A4'  24                       INC   H                 ; NEXT SCAN LINE
01A5'  C1                       POP   BC                ; SCAN COUNT
01A6'  0D                       DEC   C
01A7'  20 DA                    JR    NZ,LOOP0          ; MORE SCANS
01A9'  C1                       POP   BC                ; RESIDUAL LINE COUNT
01AA'  78                       LD    A,B
01AB'  A7                       AND   A
01AC'  28 04                    JR    Z,SCRLXT          ; DONE
01AE'  2E 00                    LD    L,0               ; START OF NEXT BLOCK
01B0'  18 BC                    JR    TESTAD            ; DO REMAINING LINE(S)
01B2'  C1               SCRLXT  POP   BC                ; ORIG.BC
01B3'  79                       LD    A,C               ; STARTING LINE
01B4'  80                       ADD   A,B               ; ADD NO. OF LINES MOVED
01B5'  3D                       DEC   A                 ; LAST LINE SCROLLED
01B6'  4F                       LD    C,A
01B7'  06 01                    LD    B,1               ; CLEAR 1 LINE
01B9'  18 52                    JR    CLRSC0            ; CLEAR VACATED LINE AND RETURN
                        ;
01BB'  4F               GRBLK   LD    C,A
01BC'  78                       LD    A,B
01BD'  91                       SUB   C                 ; ADJUST TOTAL LINE COUNT BY NO.
01BE'  47                       LD    B,A               ; OF LINES THIS BLOCK
01BF'  C5                       PUSH BC
01C0'  79                       LD    A,C               ; LOAD A NO. OF LINES THIS BLOCK
01C1'  18 B0                    JR    LOOP
                        ;
01C3'  05               STBLK   DEC    B                ; ADJUST TOTAL LINE COUNT-1
01C4'  C5                       PUSH   BC
01C5'  0E 08                    LD     C,8              ; SCAN COUNT
01C7'  C5               STBLK0  PUSH   BC               ; SAVE SCAN COUNT
01C8'  EB               STBLK1  EX     DE,HL
01C9'  21 F8E0                  LD     HL,-720H
```

```
01CC'  19                       ADD    HL,DE
01CD'  EB                       EX     DE,HL            ; ADRS. OF PREV. LINE
01CE'  01 0020                  LD     BC,32            ; BYTE COUNT
01D1'  E5                       PUSH   HL
01D2'  ED B0                    LDIR                    ; DO MOVE
01D4'  E1                       POP    HL
01D5'  7C                       LD     A,H
01D6'  CB 6F                    BIT    5,A
01D8'  20 05                    JR     NZ,STBLK2
01DA'  F6 20                    OR     20H              ; DO OF2
01DC'  67                       LD     H,A
01DD'  18 E9                    JR     STBLK1
01DF'  E6 DF            STBLK2  AND    0DFH             ; BACK TO OF1
01E1'  67                       LD     H,A
01E2'  24                       INC    H                ; TO NEXT SCAN LINE
01E3'  C1                       POP    BC
01E4'  0D                       DEC    C                ; TEST IF MORE SCANS
01E5'  20 E0                    JR     NZ,STBLK0
01E7'  C1                       POP    BC               ; REMAINING LINE COUNT
01E8'  78                       LD     A,B
01E9'  A7                       AND    A
01EA'  28 C6                    JR     Z,SCRLXT
01EC'  11 F820                  LD     DE,-7E0H         ; ADJUST TO LINE 1
01EF'  19                       ADD    HL,DE
01F0'  C3 016E'                 JP     TESTAD           ; BC=LINE COUNT
                                                        ; HL=OF ADDRESS
                        ;
```

```
                            SUBTTL  CLEAR SCREEN
                    ;
                    ;
01F3'                   CLRSB0:                                 ; HERE FROM BASIC ENTRY TO CLEAR SCREEN
01F3'   ED 4B 000C'             LD    BC,(CLRCTL)              ; GET CONTROL INFO.
                    ;
01F7'                   CLRSCN:                                 ; ENTRY WITH BC=LINE COUNT AND
                                                                ; STARTING LINE NO. FOR CLEAR
01F7'   78                      LD    A,B
01F8'   A7                      AND   A                        ; TEST VALIDITY
01F9'   CA 00C2'                JP    Z,INVPAR                 ; ERROR IF COUNT=0
01FC'   81                      ADD   A,C
01FD'   FE 01                   CP    1
01FF'   DA 00C2'                JP    C,INVPAR                 ; ERROR IF B+C<1
0202'   FE 19                   CP    25
0204'   D2 00C2'                JP    NC,INVPAR                ; ERROR IF B+C>24
0207'   CD 020D'                CALL  CLRSC0                   ; DO SERVICE
020A'   C3 00BD'                JP     GOODRET                 ; RETURN BC=0
                    ;
                    ;
020D'   C5              CLRSC0  PUSH  BC
020E'   3E 18                   LD    A,SCRSZ                  ; CONVERT TO INTERNAL FORMAT
0210'   91                      SUB   C
0211'   47                      LD    B,A
0212'   3A 0033'                LD    A,(LINLEN)
0215'   3C                      INC   A                        ; SET TO COL.0
0216'   4F                      LD    C,A
0217'   CD 0474'                CALL  LNBU                     ; GET ADDRESS
021A'   50                      LD    D,B
021B'   59                      LD    E,C                      ; SAVE POSITION
021C'   C1                      POP   BC                       ; ORIG. BC
021D'   D5                      PUSH  DE
021E'   7D              CLRSC1  LD    A,L                      ; GET # OF LINES THIS BLOCK
021F'   07                      RLCA
0220'   07                      RLCA
0221'   07                      RLCA
0222'   4F                      LD    C,A
0223'   3E 08                   LD    A,8
0225'   91                      SUB   C
0226'   B8                      CP    B                        ; COMPARE TO TOTAL LINE COUNT
0227'   38 3C                   JR    C,CLRSC7
0229'   78              CLRSC2  LD    A,B                      ; NO. OF LINES
022A'   06 00                   LD    B,0                      ; REMAINING LINES
022C'   C5                      PUSH  BC
022D'   47              CLRSC3  LD    B,A
022E'   0E 08                   LD    C,8                      ; SCAN COUNT
0230'   78              CLRSC4  LD    A,B
0231'   C5                      PUSH  BC
0232'   E6 07                   AND   7
0234'   0F                      RRCA
0235'   0F                      RRCA
0236'   0F                      RRCA
```

```
0237'   4F                      LD    C,A                      ; BC=32*NO. OF LINES
0238'   06 00                   LD    B,0                      ; (=0 IF 256 FOR 8 LINES)
023A'   0D                      DEC   C                        ; ADJUST
023B'   C5              CLRSC5  PUSH  BC
023C'   E5                      PUSH  HL
023D'   54                      LD    D,H
023E'   5D                      LD    E,L
023F'   36 00                   LD    (HL),00                  ; CLEAR DF
0241'   13                      INC   DE
0242'   ED B0                   LDIR
0244'   E1                      POP   HL
0245'   C1                      POP   BC
0246'   7C                      LD    A,H
0247'   CB 6F                   BIT   5,A
0249'   20 05                   JR    NZ,CLRSC6
024B'   F6 20                   OR    20H
024D'   67                      LD    H,A                      ; DO DF2
024E'   18 EB                   JR    CLRSC5
0250'   E6 DF           CLRSC6  AND   0DFH                     ; RESTORE DF1
0252'   67                      LD    H,A
0253'   24                      INC   H                        ; NEXT SCAN ROW
0254'   C1                      POP   BC                       ; POP SCAN COUNT
0255'   0D                      DEC   C
0256'   20 D8                   JR    NZ,CLRSC4
0258'   C1                      POP   BC                       ; TOTAL LINE COUNT
0259'   78                      LD    A,B
025A'   A7                      AND   A
025B'   28 05                   JR    Z,CLRSXT
025D'   2E 00                   LD    L,0                      ; HL=START OF NEXT BLOCK
025F'   C3 021E'                JP    CLRSC1                   ; B=REMAINING LINE COUNT
0262'   C1              CLRSXT  POP   BC                       ; POSITION
0263'   C3 0456'                JP    UPDPOSN                  ; RETURN VIA UPDATE AND STORE POSITION
0266'   4F              CLRSC7  LD    C,A                      ; SAVE NO. LINES THIS BLOCK
0267'   78                      LD    A,B
0268'   91                      SUB   C                        ; ADJUST TOTAL LINE COUNT
0269'   47                      LD    B,A
026A'   C5                      PUSH  BC                       ; REMAINING LINE COUNT
026B'   79                      LD    A,C                      ; LINES THIS BLOCK
026C'   18 BF                   JR    CLRSC3                   ;
```

```
                         590            SUBTTL ATTRIBUTE CONTROL
                         591    ;
                         592    ;
                         593    ;
  026E'                  594    SETABO:                           ; HERE FROM BASIC ENTRY TO SET ATTRIBUTES
  026E'   3A 0011'       595            LD   A,(ATTCTL)          ; GET CONTROL INFO.
                         596    ;
  0271'                  597    SETATT:                           ; ENTRY WITH ATTRIBUTE BYTE IN A
  0271'   E6 07          598            AND  7                   ; GET INK SELECTION
  0273'   4F             599            LD   C,A                 ; SAVE
  0274'   3A 5CC2        600            LD   A,(VIDMOD)          ; TEST IF DF2 OPEN
  0277'   A7             601            AND  A
  0278'   CA 00C2'       602            JP   Z,INVPAR            ; INVALID IF DF2 NOT OPEN
  027B'   79             603            LD   A,C
  027C'   17             604            RLA
  027D'   17             605            RLA
  027E'   17             606            RLA                      ; SHIFT TO H/W POSITION
  027F'   F5             607            PUSH AF                  ; SAVE ROTATED VALUE
  0280'   F6 06          608            OR   6                   ; SET H/W MODE
  0282'   47             609            LD   B,A                 ; VALUE FOR H/W
  0283'   DB FF          610            IN   A,(HREXPT)          ;
  0285'   E6 C0          611            AND  0C0H                ; PRESERVE BITS 7 AND 6
  0287'   B0             612            OR   B                   ; SET VIDEO MODE VALUE
  0288'   D3 FF          613            OUT  (HREXPT),A          ; SET H/W
  028A'   F6 40          614            OR   40H                 ; UPDATE VIDMOD
  028C'   32 5CC2        615            LD   (VIDMOD),A          ;
  028F'   F1             616            POP  AF                  ; INK SELECTION IN BITS 3-5
  0290'   2F             617            CPL                      ; GET COMPLEMENTARY COLOR
  0291'   B1             618            OR   C                   ; COMBINE WITH INK
  0292'   32 0039'       619            LD   (ATTBYT),A          ; SAVE IN VARIABLE
  0295'   C3 00BD'       620            JP   GOODRET             ; RETURN BC=0
                         621    ;
                         622    ;
                         623    ;
  0298'                  624    SETMBO:                           ; HERE FROM BASIC ENTRY TO SET MASK
  0298'   3A 0015'       625            LD   A,(MSKCTL)          ; GET CONTROL INFO.
                         626    ;
  029B'                  627    SETMSK:                           ; ENTRY WITH MASK VALUE IN A
  029B'   32 0038'       628            LD   (MASKB),A           ; STORE MASK FOR APPLICATION TO FUTURE
  029E'   C3 00BD'       629            JP   GOODRET             ; DISPLAYS
                         630    ;
```

```
                         632            SUBTTL  "GET" ROUTINES
                         633    ;
                         634    ;
  02A1'                  635    GTCHBO:                           ; HERE FROM BASIC ENTRY TO GET CHARACTER
                         636                                      ; (RETURNS CODE FOR CHARACTER AT
                         637                                      ;  POSITION SPECIFIED IN GETCTL)
  02A1'   ED 4B 0019'    638            LD   BC,(GETCTL)         ; GET CONTROL INFO.
                         639    ;
  02A5'                  640    GTCHAR:                           ; ENTRY WITH POSITION IN BC
  02A5'   CD 043A'       641            CALL TSTPAR              ; TEST PARAMETERS
  02A8'   CD 044B'       642            CALL CONVRM              ; CONVERT TO INTERNAL FORMAT
  02AB'   CD 045B'       643            CALL CALCPOS             ; GET DISPLAY FILE ADRS.
  02AE'   ED 5B 002F'    644            LD   DE,(CHTBL)          ; CHAR.TABLE
  02B2'   06 60          645            LD   B,96                ; NO. OF PRINTABLE CHARACTERS
  02B4'   3E 80          646            LD   A,80H               ; SET ADJUSTMENT INDEX
  02B6'   32 003A'       647    GTCH1   LD    (GTINDX),A
  02B9'   14             648            INC  D                   ; ADJUST TO START OF TABLE
  02BA'   EB             649            EX    DE,HL              ; OF ADRS.IN DF:CHAR.SET IN HL
  02BB'   C5             650    GTCH2   PUSH  BC                 ; SAVE COUNT
  02BC'   D5             651            PUSH  DE                 ; SAVE ADRS. IN DF
  02BD'   E5             652            PUSH  HL                 ; SAVE ADRS. IN CHAR.TABLE
  02BE'   1A             653            LD    A,(DE)             ; SCAN ROW FROM DF
  02BF'   AE             654            XOR   (HL)               ; TEST AGAINST CHAR. SET
  02C0'   28 10          655            JR    Z,GTCH3            ; MATCH
  02C2'   F5             656            PUSH  AF
  02C3'   3A 003A'       657            LD    A,(GTINDX)
  02C6'   FE 90          658            CP    90H                ; TEST IF STD.GRAPHICS
  02C8'   20 03          659            JR    NZ,GTCH23
  02CA'   F1             660            POP   AF
  02CB'   18 27          661            JR    GTCH4              ; DO NOT TEST FOR INVERSE
  02CD'   F1             662    GTCH23  POP   AF
  02CE'   3C             663            INC   A                  ; TEST INVERSE
  02CF'   20 23          664            JR  NZ,GTCH4
  02D1'   3D             665            DEC   A                  ; A=-1 FOR INVERSE
  02D2'   4F             666    GTCH3   LD    C,A                ; C=0 FOR MATCH  -1 FOR INVERSE
  02D3'   06 07          667            LD    B,7
  02D5'   14             668    GTCH31  INC   D                  ; NEXT SCAN IN DF
  02D6'   23             669            INC   HL                 ; NEXT BYTE IN CHAR.SET
  02D7'   1A             670            LD    A,(DE)
  02D8'   AE             671            XOR   (HL)
  02D9'   A9             672            XOR   C
  02DA'   20 18          673            JR    NZ,GTCH4           ; NO MATCH
  02DC'   10 F7          674            DJNZ  GTCH31     ; FOR NEXT SCAN
                         675                               ;
                         676                               ; HERE IF MATCH WITH (SP)=CHAR IN CHAR SET
                         677                               ; (SP+2)=CHAR.IN DISPLAY FILE (SP+5)=CHAR.
                         678                               ; COUNT
  02DE'   79             679            LD    A,C        ; A=-1 IF MATCH ON INVERSE
  02DF'   C1             680            POP   BC
  02E0'   C1             681            POP   BC
  02E1'   C1             682            POP   BC
  02E2'   4F             683            LD    C,A        ; B=COUNT C=-1 IF MATCH ON INVERSE
```

```
02E3'   3A 003A'                   LD    A,(GTINDX)       ; ADJUST CHAR.CODE
02E6'   90                         SUB   B          ; A=CHAR.CODE
02E7'   FE 20                      CP    20H        ; TEST IF SPACE
02E9'   20 05                      JR    NZ,GTCH32
02EB'   0C                         INC   C          ; TEST IF MATCH ON INVERSE SPACE
02EC'   20 02                      JR    NZ,GTCH32
02EE'   3E 8F                      LD    A,8FH      ; SET CODE FOR GRAPHICS BLOCK
02F0'   4F                 GTCH32  LD    C,A
02F1'   06 00                      LD    B,0
02F3'   C9                         RET              ; CHAR.CODE IN A AND IN BC
                           ;
02F4'   E1                 GTCH4   POP   HL         ; HERE WHEN NO MATCH
02F5'   11 0008                    LD    DE,8       ; LOOK AT NEXT CHAR. IN SET
02F8'   19                         ADD   HL,DE            ; CHAR. SET
02F9'   D1                         POP   DE               ; CHAR. IN DF
02FA'   C1                         POP   BC               ; CHAR.COUNT
02FB'   10 BE                      DJNZ  GTCH2      ; LOOK AGAIN
                                                    ;
                                                    ; HERE TO TEST IF DONE
02FD'   EB                         EX    DE,HL      ; CF ADRS.TO HL
02FE'   3A 003A'                   LD    A,(GTINDX)
0301'   FE 80                      CP    80H        ; TEST IF STD.CHR.SET
0303'   20 0A                      JR    NZ,GTCH5   ; TRY GRAPHICS
0305'   ED 5B 0031'                LD    DE,(GRTBL) ; STD.GRAPHICS TABLE
0309'   06 10                      LD    B,16       ; NO. OF ENTRIES
030B'   3E 90                      LD    A,90H      ; INDEX
030D'   18 A7                      JR    GTCH1      ;
030F'   FE 90              GTCH5   CP    90H        ; TEST IF STD.GRAPHICS
0311'   20 0B                      JR    NZ,GTCH6   ; DONE IF NOT
0313'   ED 5B 5C7B                 LD    DE,(UDG)   ; TRY USER-DEFINED GRAPHICS AREA
0317'   15                         DEC   D          ; ADJUST ADDRESS-100H
0318'   06 15                      LD    B,21       ; NO OF ENTRIES
031A'   3E A5                      LD    A,0A5H     ; INDEX
031C'   18 98                      JR    GTCH1
031E'   48                 GTCH6   LD    C,B        ; HERE WHEN NO MATCH ANYWHERE
031F'   AF                         XOR   A          ; SET BC AND A=ZERO
0320'   C9                         RET

                                                    ; GET ATTRIBUTE BYTE
                                                    ; NOTE THAT IN 64-COL.MODE ALL SCREEN POSITIONS
                                                    ; HAVE THE SAME ATTRIBUTES, THEREFORE IT IS
                                                    ; NOT NECESSARY TO USE THE "GETCTL" POSITION
                                                    ; PARAMETERS
                           ;
0321'                      GETAB0:                  ; HERE FROM BASIC ENTRY TO GET ATTRIBUTE
                           ;
0321'   3A 0039'           GETATT: LD   A,(ATTBYT) ; GET ATTRIBUTE BYTE
0324'   4F                         LD    C,A        ; PUT IN BC
0325'   06 00                      LD    B,0
0327'   C9                         RET
                           ;                        ; GET CURSOR POSITION
0328'                      GETCB0:                  ; HERE FROM BASIC ENTRY
```

```
0328'                      GETCUR:
0328'   ED 4B 0034'                LD    BC,(CURPOS)        ; GET INTERNAL POSITION
032C'   CD 0448'                   CALL  CONVPM             ; CONVERT TO USER FORMAT
032F'   3A 0033'                   LD    A,(LINLEN)
0332'   B9                         CP    C                  ; TEST IF END OF LINE(=64)
0333'   20 08                      JR    NZ,GETC1           ; NO
0335'   0E 00                      LD    C,0                ; NEXT POSN.START OF NEXT LINE
0337'   78                         LD    A,B
0338'   3C                         INC   A                  ; BUMP TO NEXT LINE
0339'   47                         LD    B,A
033A'   FE 18                      CP    24                 ; TEST IF OFF SCREEN
033C'   38 02                      JR    C,GETC1            ; NO
033E'   06 17                      LD    B,23               ; POSN. IS AT BOTTOM LINE
0340'   ED 43 0007'        GETC1   LD    (LINCOL),BC        ; STORE FOR BASIC PROGRAM
0344'   C9                         RET                      ; VALUES ALSO IN BC
                           ;
```

```
                          753               SUBTTL  VIDEO MODE CONTROL
                          754       ;
                          755       ;
 0345'                    756       STMDBO:                 ; HERE FROM BASIC ENTRY WITH MODE IN
                          757                               ; 'VIMODE'
 0345'  3A 0024'          758               LD  A,(VIMODE)
                          759       ;
 0348'                    760       SETMODE:                ; ENTRY WITH MODE IN A
                          761       ;
 0348'  A7                762               AND  A
 0349'  28 4A             763               JR   Z,SETMO1   ; TEST FOR VALIDITY
 034B'  FE 06             764               CP   6
 034D'  C2 00C2'          765               JP   NZ,INVPAR  ; INVALID PARAMETERS
 0350'  21 1701           766               LD   HL SCINIT  ; INITIALIZE VARIABLES
 0353'  22 0028'          767               LD   (SCRCTL),HL ; SCROLL CONTROL
 0356'  3E 17             768               LD   A,23       ;
 0358'  32 002D'          769               LD   (BOTLN),A  ; BOTTOM LINE
 035B'  3E 01             770               LD   A,1        ;
 035D'  32 002E'          771               LD   (SCRLCT),A ; SCROLL COUNT
 0360'  3E 40             772               LD   A,64       ;
 0362'  32 0033'          773               LD   (LINLEN),A ; LINE LENGTH
 0365'  21 1800           774               LD   HL,CLINIT  ;
 0368'  22 000C'          775               LD   (CLRCTL),HL ; CLEAR SCREEN CONTROL
 036B'  AF                776               XOR  A
 036C'  32 0038'          777               LD   (MASKB),A  ; MASK BYTE
 036F'  32 003B'          778               LD   (STRGCT),A ; WRSTRG REMAINING COUNT
 0372'  32 003C'          779               LD   (STRGCT+1),A ;
 0375'  21 3C00           780               LD   HL,CHRSET  ; STD.CHAR.SET
 0378'  22 002F'          781               LD   (CHTBL),HL ;
 037B'  21 0395'          782               LD   HL,GRPHST  ; STD. GRAPHICS SET
 037E'  22 0031'          783               LD   (GRTBL),HL ;
                          784       ;                       ;
                          785       ;                       ; INITIALIZE BASIC INPUTS
 0381'  32 0000'          786               LD   (DATAB),A  ; DATA BYTE
 0384'  32 0007'          787               LD   (LINCOL),A ; COLUMN
 0387'  32 0008'          788               LD   (LINCOL+1),A ; LINE
 038A'  32 0015'          789               LD   (MSKCTL),A ; MASK CONTROL
 038D'  32 0019'          790               LD   (GETCTL),A ; 'GET' COLUMN
 0390'  32 001A'          791               LD   (GETCTL+1),A ; 'GET' LINE
 0393'  3E 06             792               LD   A,6        ; SET H/W TO 64-COL.MODE
                          793       ;
 0395'  47                794       SETMO1  LD   B,A        ; SAVE MODE
 0396'  3A 5CC2           795               LD   A,(VIDMOD)
 0399'  A7                796               AND  A          ; TEST CURRENT MODE
 039A'  20 1D             797               JR   NZ,SETMO2
 039C'  B0                798               OR   B          ; CURRENT MODE=0  TEST IF NEW MODE=0
 039D'  CA 00BD'          799               JP   Z,GOODRET  ; RETURN BC=0
 03A0'  21 12C0           800               LD    HL,INSERTSZ
 03A3'  11 0840           801               LD    DE,MOVESZ
 03A6'  19                802               ADD   HL,DE     ; HL=TOTAL ROOM NEEDED
 03A7'  ED 5B 5C65        803               LD    DE,(STKEND)
 03AB'  19                804               ADD   HL,DE     ; ADD MEMORY IN USE
```

```
 03AC'  DA 03F6'          805               JP    C,EXTNRM  ; NOT ENOUGH MEMORY TO OPEN DF2
 03AF'  ED 5B 5CB2        806               LD    DE,(RAMTOP)
 03B3'  A7                807               AND   A
 03B4'  ED 52             808               SBC   HL,DE
 03B6'  D2 03F6'          809               JP    NC,EXTNRM ; NOT ENOUGH MEMORY
 03B9'  CD 0421'          810       SETMO2  CALL  ENBLEXT   ; ENABLE ROM EXT.
 03BC'  78                811               LD    A,B       ; MODE TO A
 03BD'  CD 03FB'          812               CALL  GETVAL    ; H/W VALUE TO B; VIDMOD VALUE TO C
 03C0'  C5                813               PUSH  BC        ; SAVE
 03C1'  78                814               LD    A,B
 03C2'  CD 0E8E           815               CALL  CHNGVID   ; CALL RTN. TO OPEN/CLOSE 2ND DF
 03C5'  CD 042E'          816               CALL ENBLHOME   ; REENABLE HOME BANK
 03C8'  C1                817               POP   BC
 03C9'  79                818               LD    A,C
 03CA'  32 5CC2           819               LD    (VIDMOD),A; UPDATE VIDMOD
 03CD'  CB 77             820       UPDATE  BIT   6,A                 ; UPDATE SYSTEM VARS. BASED ON MODE
 03CF'  CA 00BD'          821               JP    Z,GOODRET           ; DONE IF MODE 0
 03D2'  3E C1             822       SXT4    LD    A,0C1H              ; 64/80-COL. MODE
 03D4'  B0                823               OR    B                   ; STORE ATTRIBUTE BYTE BASED
 03D5'  2F                824               CPL                       ; ON INK SELECTION
 03D6'  CB 38             825               SRL   B
 03D8'  CB 38             826               SRL   B
 03DA'  CB 38             827               SRL   B
 03DC'  B0                828               OR    B
 03DD'  32 0039'          829               LD    (ATTBYT),A          ; ATTRIBUTE BYTE
 03E0'  32 0011'          830               LD    (ATTCTL),A          ; BASIC PARAMETER
 03E3'  3A 0033'          831       UPDT1   LD    A,(LINLEN)          ; GET LINE LENGTH
 03E6'  3C                832               INC   A
 03E7'  4F                833               LD    C,A                 ; COLUMN
 03E8'  06 18             834               LD    B,SCRSZ             ; BC=HOME POSITION (LN.0/COL.0)
 03EA'  21 0000           835               LD    HL,0
 03ED'  22 5C7D           836               LD    (COORDS),HL         ; INITIALIZE PLOT POSITION
 03F0'  CD 0456'          837               CALL  UPDPOSN             ; UPDATE AND STORE HOME POSITION
 03F3'  C3 00BD'          838               JP    GOODRET             ; RETURN BC=0
 03F6'  0E 02             839       EXTNRM  LD    C,2                 ; RETURN BC=2 FOR NO ROOM
 03F8'  C3 00BF'          840               JP    ERRRET
                          841       ;
```

```
                             SUBTTL  INTERNAL SUB-RTNS.
                    ;
                    ;
                    ;
                                                ; INPUT:  VIDEO MODE IN A
                                                ; OUTPUT: H/W SETTING IN B
                                                ;         VIDMOD SETTING IN C
                                                ; RETURNS NZ STATUS IF MODE INVALID
                                                ;
                                                ;  VALID VALUES:  INPUT     H/W      VIDMOD
                                                ;                 -----     ---      ------
                                                ;   *=DISPLAY FILE ACTIVE AT SCREEN
                                                ;
                                                ;    DF1 ONLY       0         0         0
                                                ;   DF1*& DF2      80         0        80
                                                ;   DF1 & DF2*      1         1        81
                                                ;   HIGH RES.GR.    2         2         2
                                                ;  64/80-COLUMN  06 - 3E   06 - 3E   46 - 7E
03FB'  4F           GETVAL  LD     C,A
03FC'  CB 47                BIT    0,A
03FE'  20 16                JR     NZ,TST01
0400'  FE 80                CP     80H
0402'  28 1A                JR     Z,SET0
0404'  CB 7F                BIT    7,A
0406'  C0                   RET    NZ
0407'  47                   LD     B,A
0408'  FE 02                CP     2
040A'  C8                   RET    Z
040B'  E6 C6                AND    0C6H
040D'  EE 06                XOR    6
040F'  C0                   RET    NZ
0410'  3E 40                LD     A,40H
0412'  B1                   OR     C
0413'  4F                   LD     C,A
0414'  AF                   XOR    A
0415'  C9                   RET
0416'  FE 01        TST01   CP     1
0418'  C0                   RET    NZ
0419'  06 01                LD     B,1
041B'  0E 81                LD     C,81H
041D'  C9                   RET
041E'  AF           SET0    XOR    A
041F'  47                   LD     B,A
0420'  C9                   RET
                    ;
                    ;
                                                ; ROUTINES TO ENABLE CHUNK 0 IN ROM EXT.
                                                ; FOR ACCESS TO CHNGVID ROUTINE
0421'  F5           ENBLEXT PUSH   AF
0422'  DB FF                IN     A,(MREXPT)
0424'  F6 80                OR     80H        ; SELECT ROM EXT.
0426'  D3 FF                OUT    (MREXPT),A
```

```
0428'  3E 03                LD     A,3
042A'  D3 F4                OUT    (DKMSPT),A
042C'  F1                   POP    AF
042D'  C9                   RET
                    ;
042E'  F5           ENBLMCME  PUSH  AF
042F'  AF                     XOR   A
0430'  D3 F4                  OUT   (DKMSPT),A
0432'  DB FF                  IN    A,(MREXPT)
0434'  E6 3F                  AND   03FH
0436'  D3 FF                  OUT   (MREXPT),A
0438'  F1                     POP   AF
0439'  C9                     RET
                    ;
                                                    ; TEST PARAMETER VALIDITY
                                                    ; IF NOT VALID, DISCARDS RETURN
                                                    ; AND EXITS VIA INVPAR
043A'  3E 17        TSTPAR  LD    A,23              ; TEST LINE >23
043C'  B8                   CP    B
043D'  30 04                JR    NC,TSTPR1
043F'  F1           PARERR  POP   AF
0440'  C3 00C2'             JP    INVPAR
0443'  3A 0033'     TSTPR1  LD    A,(LINLEN)
0446'  3D                   DEC   A
0447'  B9                   CP    C            ; TEST COL. >63
0448'  38 F5                JR    C,PARERR
044A'  C9                   RET
                    ;                               ; CONVERT LINE/COL. FROM USER TO
                                                    ; INTERNAL FORMAT AND VICE VERSA
                                                    ; USER FORMAT:  LINES 0-23
                                                    ;                 COL.0-63
                                                    ; INTERNAL FORMAT: LINES 24-1
                                                    ;                  COL. 65-2
                                                    ;                 (COL.1 END OF LINE)
044B'  3A 0033'     CONVFM  LD    A,(LINLEN)
044E'  3C                   INC   A
044F'  91                   SUB   C
0450'  4F                   LD    C,A
0451'  3E 18                LD    A,SCRSZ
0453'  90                   SUB   B
0454'  47                   LD    B,A
0455'  C9                   RET
                    ;
                    ;
                    ;
0456'               UPDPOSN                         ; ENTER HERE WITH BC=LINE/COL.IN
                                                    ; INTERNAL FORMAT
0456'  CD 045B'             CALL   CALCPOS          ; CALCULATE POSITION
0459'  18 2A                JR     STPOSN           ; STORE UPDATED POSITION AND RETURN
                    ;
                    ;
                    ;                               ; ROUTINE TO CALCULATE POSITION IN DF
```

```
                               947                                      ; RETURNS OF ADRS. IN HL.  PRESERVES
                               948                                      ; LINE/COLUMN POSITION IN BC
                               949    ;
    0458'   CD 0474'           950    CALCPOS CALL    LNBU              ; GET DISPLAY FILE ADRS.
    045E'   3A 0033'           951            LD      A,(LINLEN)        ; TEST WHICH OF
    0461'   3C                 952            INC     A
    0462'   91                 953            SUB     C
    0463'   CB 47              954            BIT     0,A
    0465'   28 06              955            JR      Z,CALCP1
    0467'   F5                 956            PUSH    AF
    0468'   3E 20              957            LD      A,20H
    046A'   B4                 958            OR      H                 ; IN DF2
    046B'   67                 959            LD      H,A
    046C'   F1                 960            POP     AF
    046D'   A7                 961    CALCP1  AND     A
    046E'   1F                 962            RRA                       ; COL/2 IS POSITION IN DISPLAY FILE
    046F'   5F                 963            LD      E,A
    0470'   16 00              964            LD      D,0
    0472'   19                 965            ADD     HL,DE
    0473'   C9                 966            RET
                               967    ;
                               968    ;
    0474'                      969    LNBU:                             ; GET DISPLAY FILE ADDRESS
                               970                                      ; FOR START OF LINE IN B
    0474'   3E 18              971            LD  A,SCRSZ
    0476'   90                 972            SUB  B
    0477'   57                 973            LD   D,A
    0478'   0F                 974            RRCA
    0479'   0F                 975            RRCA
    047A'   0F                 976            RRCA
    047B'   E6 E0              977            AND  0E0H
    047D'   6F                 978            LD   L,A
    047E'   7A                 979            LD   A,D
    047F'   E6 18              980            AND  18H
    0481'   F6 40              981            OR   40H
    0483'   67                 982            LD   H,A
    0484'   C9                 983            RET
                               984
    0485'                      985    STPOSN:                           ; STORE CURSOR POSITION
    0485'   ED 43 0034'        986            LD  (CURPOS),BC
    0489'   22 0036'           987            LD  (DFADRS),HL
    048C'   C9                 988            RET
                               989    ;
    048D'                      990    LDPOSN:                           ; LOAD CURSOR POSITION
    048D'   ED 4B 0034'        991            LD  BC,(CURPOS)
    0491'   2A 0036'           992            LD  HL,(DFADRS)
    0494'   C9                 993            RET
                               994    ;
                               995    ;
                               996    ;
                               997    ;
```

```
                               999            SUBTTL GRAPHICS CHAR.SET
                              1000    ;
                              1001    ;                                 ;PIXEL PATTERNS FOR STD.GRAPHICS SET
                              1002    ;                                 ; 0=BACKGROUND(PAPER) 1=FOREGROUND(INK)
                              1003    ;
    0495'   00                1004    GRPST   defb 00000000b            ; code 80       graphics space
    0496'   00                1005            defb 00000000b
    0497'   00                1006            defb 00000000b
    0498'   00                1007            defb 00000000b
    0499'   00                1008            defb 00000000b
    049A'   00                1009            defb 00000000b
    049B'   00                1010            defb 00000000b
    049C'   00                1011            defb 00000000b
                              1012    ;
    049D'   0F                1013            defb 00001111b            ; code 81       graphics
    049E'   0F                1014            defb 00001111b
    049F'   0F                1015            defb 00001111b
    04A0'   0F                1016            defb 00001111b
    04A1'   00                1017            defb 00000000b
    04A2'   00                1018            defb 00000000b
    04A3'   00                1019            defb 00000000b
    04A4'   00                1020            defb 00000000b
                              1021    ;
                              1022
    04A5'   F0                1023            defb 11110000b            ; code 82       graphics
    04A6'   F0                1024            defb 11110000b
    04A7'   F0                1025            defb 11110000b
    04A8'   F0                1026            defb 11110000b
    04A9'   00                1027            defb 00000000b
    04AA'   00                1028            defb 00000000b
    04AB'   00                1029            defb 00000000b
    04AC'   00                1030            defb 00000000b
                              1031
    04AD'   FF                1032            defb 11111111b            ; code 83       graphics
    04AE'   FF                1033            defb 11111111b
    04AF'   FF                1034            defb 11111111b
    04B0'   FF                1035            defb 11111111b
    04B1'   00                1036            defb 00000000b
    04B2'   00                1037            defb 00000000b
    04B3'   00                1038            defb 00000000b
    04B4'   00                1039            defb 00000000b
                              1040
                              1041    ;
    04B5'   00                1042            defb 00000000b            ; code 84       graphics
    04B6'   00                1043            defb 00000000b
    04B7'   00                1044            defb 00000000b
    04B8'   00                1045            defb 00000000b
    04B9'   0F                1046            defb 00001111b
    04BA'   0F                1047            defb 00001111b
    04BB'   0F                1048            defb 00001111b
    04BC'   0F                1049            defb 00001111b
                              1050    ;
```

```
     04BD'  0F              1051          defb 00001111b        ; code 85      graphics
     04BE'  0F              1052          defb 00001111b
     04BF'  0F              1053          defb 00001111b
     04C0'  0F              1054          defb 00001111b
     04C1'  0F              1055          defb 00001111b
     04C2'  0F              1056          defb 00001111b
     04C3'  0F              1057          defb 00001111b
     04C4'  0F              1058          defb 00001111b
                            1059
                            1060
     04C5'  F0              1061          defb 11110000b        ; code 86       graphics
     04C6'  F0              1062          defb 11110000b
     04C7'  F0              1063          defb 11110000b
     04C8'  F0              1064          defb 11110000b
     04C9'  0F              1065          defb 00001111b
     04CA'  0F              1066          defb 00001111b
     04CB'  0F              1067          defb 00001111b
     04CC'  0F              1068          defb 00001111b
                            1069    ;
     04CD'  FF              1070          defb 11111111b        ;code 87       graphics
     04CE'  FF              1071          defb 11111111b
     04CF'  FF              1072          defb 11111111b
     04D0'  FF              1073          defb 11111111b
     04D1'  0F              1074          defb 00001111b
     04D2'  0F              1075          defb 00001111b
     04D3'  0F              1076          defb 00001111b
     04D4'  0F              1077          defb 00001111b
                            1078    ;
     04D5'  00              1079          defb 00000000b        ; code 88      graphics
     04D6'  00              1080          defb 00000000b
     04D7'  00              1081          defb 00000000b
     04D8'  00              1082          defb 00000000b
     04D9'  F0              1083          defb 11110000b
     04DA'  F0              1084          defb 11110000b
     04DB'  F0              1085          defb 11110000b
     04DC'  F0              1086          defb 11110000b
                            1087    ;
     04DD'  0F              1088          defb 00001111b        ; code 89       graphics
     04DE'  0F              1089          defb 00001111b
     04DF'  0F              1090          defb 00001111b
     04E0'  0F              1091          defb 00001111b
     04E1'  F0              1092          defb 11110000b
     04E2'  F0              1093          defb 11110000b
     04E3'  F0              1094          defb 11110000b
     04E4'  F0              1095          defb 11110000b
                            1096    ;
     04E5'  F0              1097          defb 11110000b        ; code 8A      graphics
     04E6'  F0              1098          defb 11110000b
     04E7'  F0              1099          defb 11110000b
     04E8'  F0              1100          defb 11110000b
     04E9'  F0              1101          defb 11110000b
     04EA'  F0              1102          defb 11110000b
```

```
     04EB'  F0              1103          defb 11110000b
     04EC'  F0              1104          defb 11110000b
                            1105    ;
     04ED'  FF              1106          defb 11111111b        ; code 8B      graphics
     04EE'  FF              1107          defb 11111111b
     04EF'  FF              1108          defb 11111111b
     04F0'  FF              1109          defb 11111111b
     04F1'  F0              1110          defb 11110000b
     04F2'  F0              1111          defb 11110000b
     04F3'  F0              1112          defb 11110000b
     04F4'  F0              1113          defb 11110000b
                            1114    ;
     04F5'  00              1115          defb 00000000b        ; code 8C      graphics
     04F6'  00              1116          defb 00000000b
     04F7'  00              1117          defb 00000000b
     04F8'  00              1118          defb 00000000b
     04F9'  FF              1119          defb 11111111b
     04FA'  FF              1120          defb 11111111b
     04FB'  FF              1121          defb 11111111b
     04FC'  FF              1122          defb 11111111b
                            1123    ;
     04FD'  0F              1124          defb 00001111b        ; code 8D      graphics
     04FE'  0F              1125          defb 00001111b
     04FF'  0F              1126          defb 00001111b
     0500'  0F              1127          defb 00001111b
     0501'  FF              1128          defb 11111111b
     0502'  FF              1129          defb 11111111b
     0503'  FF              1130          defb 11111111b
     0504'  FF              1131          defb 11111111b
                            1132    ;
     0505'  F0              1133          defb 11110000b        ;code 8E       graphics
     0506'  F0              1134          defb 11110000b
     0507'  F0              1135          defb 11110000b
     0508'  F0              1136          defb 11110000b
     0509'  FF              1137          defb 11111111b
     050A'  FF              1138          defb 11111111b
     050B'  FF              1139          defb 11111111b
     050C'  FF              1140          defb 11111111b
                            1141    ;
     050D'  FF              1142          defb 11111111b        ;code 8F       graphics
     050E'  FF              1143          defb 11111111b
     050F'  FF              1144          defb 11111111b
     0510'  FF              1145          defb 11111111b
     0511'  FF              1146          defb 11111111b
     0512'  FF              1147          defb 11111111b
     0513'  FF              1148          defb 11111111b
     0514'  FF              1149          defb 11111111b
                            1150
                            1151          END
```

```
ADL - ASC 001 64-COL.MODE SUPPORT        CRZ80/11 version 10.36.14        16-Mar-84  13:8:3        Page S-1
GRAPHICS CHAR.SET   IC64.SRC

A        Reserved        ATTBYT   0039            ATTCTL   0011            B        Reserved        BOTLN    002D
C        Reserved        CALCP0   0455            CALCP1   046D            CHNGVI   0E8E            CHRSET   3C00
CHTBL     002F           CLINIT   1800            CLRCTL   000C            CLRSB0   01F3            CLRSCB   000E IN
CLRSCN    01F7 IN        CLRSC0   020D            CLRSC1   021E            CLRSC2   0229            CLRSC3   022D
CLRSC4    0230           CLRSC5   0239            CLRSC6   0250            CLRSC7   0266            CLRSXT   0262
COLEVN    00AF           COLODD   0095            CONVFM   044B            COORDS   5C7D            CURPOS   0034
D        Reserved        DATAB    0000            DEST7    F7C0            DFADRS   0036            DKHSPT   00F4
DRIVES    6840           E       Reserved         ENBLEX   0421            ENBLMO   042E            ERRRET   008F
EXTNRM    03F6           FIX      97C0            FIXTBL   1D00            GETAB0   0321            GETATB   001E IN
GETATT    0321 IN        GETCB0   0328            GETCTL   0019            GETCUB   0021 IN         GETCUR   0328 IN
GETC1     0340           GETVAL   03FB            GOODRE   008D            GRBLK    018B            GRPHST   0395
GRPST     0495           GRTBL    0031            GTCHAR   02A5 IN         GTCH80   02A1            GTCHR8   0018 IN
GTCH1     02B6           GTCH2    028B            GTCH23   02CD            GTCH3    02D2            GTCH31   02D5
GTCH32    02F0           GTCH4    02F4            GTCH5    030F            GTCH6    031E            GTINDX   003A
H        Reserved        HREXPT   00FF            INSDBL   017C            INSERT   12C0            INVPAR   00C2
L        Reserved        LDPOSN   048D            LINCCL   0007            LINLEN   0033            LNBU     0474
LOOP      0180           LOOP0    0183            LOOP1    0188            M        Reserved        MASKB    0038
MOVESZ    0847           MSKCTL   0015            NOSTRG   0131            NXTSC    01A1            PARAM$   5CC3
PARERR    04JF           PRAMT    5CB4            PSW     Reserved         RAMTOP   5C82            RECLEN   1720
SCINIT    1701           SCRCTL   0028            SCRLB    002A IN         SCRLB0   0145            SCRLCT   002E
SCRLXT    0182           SCRLO    015F            SCROLL   0149 IN         SCRSZ    0018            SETAB0   026E
SETATB    0012 IN        SETATT   0271 IN         SETCB0   0135            SETCUB   0009 IN         SETCUR   0139 IN
SETM80    0298           SETMDB   0025 IN         SETMD1   0395            SETMD2   0399            SETMCO   0348 IN
SETMSB    0016 IN        SETMSK   0298 IN         SETO     041E            SP       Reserved        STBLK    01C3
STBLK0    01C7           STBLK1   01C9            STBLK2   010F            STKEND   5C65            STMOB0   0345
STPOSN    0485           STRGCT   0035            SXT4     0302            TESTAD   016E            TSTPAR   043A
TSTPR1    0443           TST01    0416            TVFULO   00C6            TVFUL1   00E2            UDG      5C7B
UPDATE    03CD           UPDPOS   0456            UPDT1    03E3            VARS     5C4B            VIDMOD   5CC2
VIMODE    0024           WRCHAR   0040 IN         WRCHR8   0001 IN         WRCHXT   00BA            WRCH0    003D
WRCH11    005F           WRCH12   0067            WRCH13   006B            WRCH14   0081            WRCH15   0082
WRCH2     0088           WRCH3    0093            WRCH5    0098            WRCH7    00A7            WRSTR8   0004 IN
WRSTRG    010F IN        WRSTR0   00EC            WRSTR1   00F7            WRSTR2   0107            WRSTR3   0119
WRSTX1    0122           WRSTX2   012E

      No errors detected
```

```
Cross reference listing (MREF version 4.7)

Symbol     Refs (# = definition  $ = write  <blank> = read)

ATTBYT     160#     619$     730      829$
ATTCTL     105#     595      830$
BOTLN      133#     269      759$
CALCP1     955      961#
CALCP0     643      942      950#
CHNGVI      55#     815
CHRSET      52#     150      780
CHTBL      150#     195      644      781$
CLINIT      51#     774
CLRCTL     101#     502      775$
CLRSB0     104      501#
CLRSC0     434      514      518#
CLRSC1     530#     579
CLRSC2     539#
CLRSC3     542#     588
CLRSC4     544#     573
CLRSC5     553#     567
CLRSC6     564      568#
CLRSC7     538      582#
CLRSCB      45      104#
CLRSCN      43      504#
CLRSXT     577      580#
COLEVN     250#
COLODD     249      254#
CONVFM     361      642      738      929#
COORDS      64#     336$
CURPOS     155#     737      986$     991
DATAB       93#     172      786$
DEST7       72#      73
DFADRS     157#     987$     992
DKHSPT      59#     896$     902$
DRIVES      69#      70       71
ENBLEX     810      891#
ENBLMO     816      900#
ERRRET     260#     264      281      840
EXTNRM     805      809      839#
FIX         73#
FIXTBL      75#
GETAB0     122      728#
GETATB      46      122#
```

```
Cross reference listing (MREF version 4.7)

Symbol    Refs (# = definition  $ = write  <blank> = read)

GETATT     44      730#
GETC1     741      747      749#
GETCB0    123      735#
GETCTL    119#     638      790$     791$
GETCUB     46      123#
GETCUR     44      736#
GETVAL    812      861#
GOODRE    259#     363      386      515      620      629      799
                   821      938
GRBLK     408      456#
GRPHST     53#     153      782
GRPST      53     1004#
GRTBL     153#     192      707      783$
GTCH1     647#     710      717
GTCH2     650#     700
GTCH23    659      662#
GTCH3     655      666#
GTCH31    668#     674
GTCH32    687      689      691#
GTCH4     661      664      673      695#
GTCH5     706      711#
GTCH6     712      713#
GTCHAR     44      640#
GTCH80    121      635#
GTCHRB     46      121#
GTINDX    162#     647$     657      684      704
HREXPT     58#     610      613$     892      894$     903      905$
INSDBL    409#
INSERT     70#     300
INVPAR    180      192      263#     379      382      384      508
                   511      513      602      765      916
LDPOSN    175      990#
LINCOL     97#     357      749$     787$     788$
LINLEN    154#     207      392      922      739      773$     831
                   917      929      951
LNBU      395      525      950      969#
LOOP      412#     462
LOOP0     414#     441
LOOP1     421#     435
MASKB     158#     221      628$     777$
```

```
Cross reference listing (MREF version 4.7)

Symbol    Refs (# = definition  $ = write  <blank> = read)

MOVESZ     71#      72      801
MSKCTL    115#     625      789$
NOSTRG    300      349#
NXTSC     432      436#
PARAMS     68#     293
PARERR    915#     920
PRAMT      66#
RAMTOP     65#     806
RECLEN     56#     304
SCINIT     50#     766
SCRCTL    128#     283      372      767$
SCRL0     285      385      388#
SCRLB      45      131#
SCRLB0    131      370#
SCRLCT    143#     273      277$     282$     771$
SCRLXT    445      448#     491
SCROLL     43      374#
SCRSZ      49#     266      389      519      834      933      971
SET0      965      884#
SETAB0    114      594#
SETATB     45      114#
SETATT     43      597#
SETCB0    100      355#
SETCUB     45      100#
SETCUR     43      359#
SETMB0    118      624#
SETMD1    763      794#
SETMD2    797      810#
SETMDB     47      127#
SETMOD     47      760#
SETMSB     45      118#
SETMSK     43      627#
STBLK     400      464#
STBLK0    467#     487
STBLK1    468#     481
STBLK2    478      482#
STKEND     62#     803
STMDB0    127      756#
STPOSN    258      943      955#
STRGCT    164#     343$     778$     779$
```

```
Cross reference listing (MREF version 4.7)

Symbol     Refs (# = definition  $ = write  <blank> = read)

SXT4       822#
TESTAD     398#     447      494
TST01      863      879#
TSTPAR     360      641      912#
TSTPR1     914      917#
TVFUL1     275      282#
TVFULQ     216      265#
UDG         63#     188      713
UPDATE     820#
UPDPOS     271      362      581      837      940#
UPDT1      831#
VARS        61#     297
VIDMOD      67#     600      615$     795      819$
VIMOD2     124#     758
WRCH0       94      170#
WRCH11     187      192#
WRCH12     185      195#
WRCH13     191      194      196#
WRCH14     208      213#
WRCH15     212      214#
WRCH2      219#
WRCH3      224      226#
WRCH5      233#     243
WRCH7      244#
WRCHAR      43      174#     325
WRCHRB      45       94#
WRCHXT     253      258#
WRSTR0      95      293#
WRSTR1     298#     307
WRSTR2     302      308#
WRSTR3     330#     341
WRSTRB      45       95#
WRSTRG      43      322#     336
WRSTX1     328      339#
WRSTX2     346#     350
```

APPENDIX
C-2

TIMEX COMPUTER CORPORATION

APPLICATION DEVELOPMENT LIBRARY

Application Software Component 002

80-COLUMN MODE

Date: 12/16/83

ASC Number: 002

Version: 001

Author: C. Corcoran/D. Boyle

Name: 80 Column Mode Support

Description:

This component provides support to the application programmer for using the 80-column mode feature of the TS 2068. 80-Column Mode is implemented by using the 64-Column Mode feature of the 2068 and modifying the character width from 8 to 6 pixels. The services include opening/closing the second display file (moving the machine stack, OS RAM routines and BASIC structures), PRINT position control, attribute control, clear screen and scroll screen services and display of characters. For ease of use from BASIC, status is returned in the BC register pair, usually zero for successful completion and designated non-zero values for other conditions. The interface from BASIC is by means of POKE'ing the input parameters to designated RAM locations prior to invoking the service via the USR function. See page 4 of the code listing for the memory addresses to be used from BASIC with the support code loaded starting at Chunk 7 (E000H/57344).

ASC Number: 002

Version Control

Version	Description	Date
001	Original	12/16/83

Application Services

Name: SETMODE (SETMOB from BASIC - parameter to VIMODE)

Input: MODE (0=normal , 8=80 column mode)

From machine code: Register A
From BASIC: In VIMODE

Description:

Sets specified video mode, opening or closing the second display file where needed. This involves determining if there is enough free RAM to open the second display file and if so, moving the BASIC structures and machine language variables area up and the UDG area down to make space for the machine stack and OS RAM routines at the top of memory. The second display file is cleared to zeroes. The affected system and internal variables are updated or initialized (see Usage Section). When returning to Mode 0 from 80 Column mode, the structures are returned to their normal locations.

Output: BC = 0 Successful
BC = 1 Invalid parameters (not equal to 0 or 8)
BC = 2 Not enough memory

Name: CLRSCN (CLRSCB from BASIC - parameters to CLSCTL)

Input: Line Count (1-24)
Starting Line Number (0-23)

From Machine Code: Line Count In Register B
Starting Line In Register C

From BASIC: Starting Line Number in CLSCTL
Line Count in CLSCTL + 1

Description:

Clears to background color (PAPER) the designated number of lines, beginning with the Starting Line Number. Line 0 with a count of 24 clears the entire screen. Upon return, the cursor position is at the beginning of the first line cleared.

Output: BC = 0 for successful completion
BC = 1 invalid parameters
(Line Number + Line Count <1 or >24)

ASC Number: 002

Name: SETCUR (SETCUB from BASIC - parameters to LINCOL)

Input: Line Number (0-23)
Column Number (0-79) or (0-84)

From Machine Code: Line Number In Register B
Column Number In Register C

From BASIC: Column Number In LINCOL
Line Number In LINCOL + 1

Description:

Converts the requested position to internal format, determines display file address, and stores the values for use by the next display character operation. Note that once established, the position is updated automatically when a character is displayed so that it is only necessary to set the position when sequential display is not desired.

Output: BC = 0 for successful completion
BC = 1 for invalid parameters (Line Number > 23 ,
Column Number > Line Length-1)

ASC Number: 002

Name: SETATT (SETATB from BASIC - parameter to ATTCTL)

Input: Attribute Byte - bit 7 - FLASH
bit 6 - BRIGHT
bit 5 - P
bit 4 - A
bit 3 - PER
bit 2 - I
bit 1 - N
bit 0 - K

From Machine Code: Register A
From BASIC: In ATTCTL

Description:

The specified INK color (0-7) is used to set the video mode hardware and to update VIDMOD. The complementary PAPER color is fixed by the INK selection. FLASH and BRIGHT are fixed at zero by the hardware. Note that in 80 column mode the entire screen has the same attributes.

Output: BC = 0 Successful

ASC Number: 002

Name: SETMSK (SETMSB from BASIC - paramters to MSKCTL)

```
Input:  Mask Byte  - bit 0 - OVER
                     bit 2 - INVERSE
```

From Machine Code: Register A

From BASIC: MSKCTL

Description:

The specified mask is stored for application to all subsequent display character operations. (OVER = 1 implies new character combined with old using an XOR operation; INVERSE = 1 implies character is inverted).

Output: BC = 0 for successful completion

ASC Number: 002

Name: WRCHR (WRCHB from BASIC - parameter to DATAB)

Input: Character code for character to be displayed

```
20H TO 7FH - Std. TS2068 Character Set
80H TO 8FH - Std. Graphics Set
90H TO A4H - User-Defined Graphics Set
```

From Machine Code: Register A

From BASIC: in DATAB

Description:

Displays character at current cursor position, applying current mask. Moves cursor position on to next sequential position. If character would start a new line after BOTLN (see Usage section) and the scroll count (variable SCRLCT) decrements to zero, the character will not be displayed and return will be made with BC = 3 (screen full). If the scroll count does not decrement to zero, the screen will be scrolled up one line using the information in SCRCTL and the new line started at the vacated line.

Note that only the first 6 bits of each byte in the User Defined Graphics area will be transferred to the display file.

```
Output:  BC = 0 for successful completion
         BC = 1 invalid character code
         BC = 3 for screen full
```

ASC Number: 002

Name: WRSTRG (WRSTRB from BASIC - String Identifier to PARAM$)

Input: Character Code String

From machine code: Address of string in HL
Count in BC

From BASIC: String Variable Identifier in
System Variable PARAM$ - 23747 (5CC3H)

Description:

Displays the characters from the string, beginning at the current cursor location and continuing sequentially until the count expires, or 'Screen Full' is detected (see WRCHR description and Usage Section on Automatic Scrolling). For the Screen Full condition the remaining count is stored in the internal variable STRGCT for access by the user.

NOTE: Characters within the string which are outside of the supported range (32 through 164 (20H-A4H)) will be ignored. E.g., BASIC Token codes and control codes embedded in an INPUT string will not be displayed or decoded.

From BASIC, POKE the code for the string variable identifier into PARAM$ prior to invoking WRSTRB, e.g.

```
0005  LET a$="-----string------"
0010  POKE 23747,CODE "a"
0015  IF USR (WRSTRB)<>0 THEN -----
         (continue)
```

Output:
BC = 0 Successful
BC = 2 BASIC - String not found
BC = 3 Screen Full - Remaining Count in STRGCT
(HL =Current Address in String)

ASC Number: 002

Name: SCROLL (SCRLB from BASIC - parameters to SCRCTL)

Input: Line Count (1-23)
Starting Line Number (1-23)

From Machine Code: Line Count In B
Starting Line In C

From BASIC: Starting Line In SCRCTL
Line Count In SCRCTL + 1

Description:

Scrolls the designated number of lines up 1 position, starting at the specified line number and inserts a blank line at the bottom of the scrolled area. Line 1 with a count of 23 will scroll the entire screen up 1 line. Upon return, the cursor position is at the beginning of the inserted blank line.

Note: See Usage Section on 'automatic' scrolling.

Output:
BC = 0 Successful
BC = 1 Invalid Parameters
(Line Number + Line Count < 1 or > 24)

Name: GTCHAR (GTCHRB from BASIC - parameters to GETCTL)

Input: Line/Column position as for SETCUR

From Machine Code: Line Number in B
Column Number in C

From BASIC: Column Number in GETCTL
Line Number in GETCTL + 1

Description:

Returns in register C of the BC register pair the character code for the character at the designated screen position. If no match against the character set (including the standard and user-defined graphics) is found, zero is returned. (Character code or zero also returned in A.)

Note: Positions 'printed' using the OVER technique will return zero if they do not match against any single character.

Output: BC = 0 for no find
BC = 1 invalid parameters
BC = character code (20H-A4H)

Name: GETATT (GETATB from BASIC - parameters to GETCTL)

Input: As for GTCHAR

Description:

Returns in register C of the BC register pair the attribute byte for the character at the designated screen position. Note that in 80 column mode the entire screen has common attributes. The value returned will describe the current selection:

Output: BC = 1 for invalid parameters
BC = attribute byte (as for SETATT)

ASC Number: 002

- -

Name: GETCUR (GETCUB from BASIC)

Input: None

Description:

Returns in the BC register pair and in the BASIC parameter location LINCOL, the current print position (where the next character would be displayed).

Output: B = Line number (0-23)
        C = Column number (0-79) or (0-84)

BASIC: LINCOL - Column number
       LINCOL + 1 - Line number

NOTE: If the last character was printed at Col.79 (84) of Line 23 (last position on the screen), then Col.0/Line 23 will be returned.

- -

ASC Number: 002

Usage:

Memory Usage:

This package of machine code routines includes the following internal variables:

Name	Size	Description
SCRCTL	2	Scroll Control LSB = Starting line number MSB = Number of lines to be scrolled
BOTLN	1	Bottom Line - Line number (0-23) after which test for scroll will be made.
SCRLCT	1	Scroll Count- Number of times + 1 that automatic scroll will be done. When decremented to zero, data will not be displayed and a condition code will be returned to user.
CHTEL	2	Character Table (Base Address-100H)
GRTBL	2	Std.Graphics Character Table (Base-100H)
LINLEN	1	Line Length - (80 or 85 when in 80-Col.Mode)
CURPOS	2	Current Position (Internal Format) LSB = Column Position MSB = Line Position
DFADDR	2	Current Display File Address
MASKB	1	Mask Byte (bit 0 = OVER) (bit 2 = INVERSE)
ATTEYT	1	Attribute Byte (bits 0 - 2 - INK) (bits 3 - 5 - PAPER) (bit 6 - BRIGHT (Set to zero (bit 7 - FLASH by H/w in 80-col.mode)
GTINDX	1	'Get' Index - Used by GTCHAR
STRGCT	2	String Count - Contains remaining byte count when BC=3 (Screen Full) is returned from the Write String service WRSTRG (WRSTRB).

MARGIN	1	Margin - Margin Adjust (0-2)
DFBIT	1	Display File Bit - Current Bit Position

Initial values set via SETMODE (SETMDB) are as follows:

Variable Name	Value
SCRCTL	1701H
BOTLN	17H
SCRLCT	1H
CHTBL	(Internal to Module)
GRTBL	(Internal to Module)
LINLEN	50H
CURPOS	1851H
DFADDR	4000H
MASKB	0H
ATTBYT	38H
GTINDX	80H
STRGCT	0H
MARGIN	1H
DFBIT	7H

The following are the variables used for passing parameters in BASIC. The * indicates those initialized by SETMDB:

Variable Name	Size	Value
* DATAB	1	0H
* LINCOL	2	0H
* CLRCTL	2	1800H
* ATTCTL	1	38H
* MSKCTL	1	0H
* GETCTL	2	0H
VIMODE	1	

In addition, VIDMOD, PARAMS and other system variables must be available to these routines. At minimum, chunks 0-3 and chunk 7 must be enabled in the Home Bank.

Location:

This package can be incorporated into a machine code program within the memory range from chunk 4 through 7, taking into consideration the remapping of certain structures when the second display file is open. NOTE: Machine code above RAMTOP is not moved.

The routine SETMODE (SETMDB) cannot be executed from a cartridge because of the necessity to enable the ROM Extension which disables the DOCK Bank.

Registers:

Other than as documented for output values, no claims are made as to preservation of any register contents except for the IY Register which must always contain the value 5C3Ah for access to the standard system variables.

Automatic Scrolling:

As initialized, test for scrolling will be made when the print position goes to the next line following the bottom line on screen (BOTLN=23=24th line). Condition Code 3 (Screen Full) will be returned since SCRLCT will decrement to zero. If SCRLCT is set to some larger value, then the parameters in SCRCTL will be used to automatically scroll the designated number of lines beginning at the specified line number. As initialized, this will scroll the entire screen up. By performing a POKE or setting the variables BOTLN and SCRCTL to the desired values, automatic scrolling can be done using smaller sections of the screen. When working from BASIC it is recommended that BOTLN be set to Line 21 (15H) and SCRCTL+1 be set to 21 (15H) to avoid conflict with the Edit Line which uses the bottom two lines of the screen. Note that once SCRLCT expires, it will be set to 1. If a different value is desired, it must be reinitialized by the user after receiving the 'Screen Full' condition.

By setting the SCRCTL variable and invoking the SCROLL (SCRLB) routine any portion of the screen may be scrolled at any time.

Margin Control:

In 80-Column Mode, there are actually 85 character positions per line. The variable MARGIN determines the offset of the beginning of the 80 column line from the left side of the screen and has valid offset values of 0, 1 or 2. An offset value of 1 centers the 80 column line on the screen; 0 begins at the extreme left side; 2 terminates at the extreme right side. The default value is 1. When MARGIN is set to 0, the variable LINLEN can be set to 85 to permit access to the 5 extra print positions. Whenever MARGIN and/or LINLEN are modified, a 'Set Cursor' operation should be done to insure the integrity of the print position.

NOTE: Since the different MARGIN values result in different pixel positions for the columns, care must be taken in mixing line length and margin values on the same line.

ADDITIONAL NOTES:

1. All screen operations done by the system ROM (PRINT, LIST Edit line I/O, CLS, scrolling, etc.) relate only to the main Display File and work with standard 8-pixel wide

   characters. This means that every alternate 8 pixels across the screen will be affected. You will want to execute the Clear Screen function in this module to guarantee that no data in the second display file interferes with the use of a system screen service, e.g., prior to doing a LIST.

2. The COPY command will print only every other grouping of 8 pixels across the screen to the 2040 Printer.

3. During tape operations, the Border will not change while in 80-column mode since this is fixed by the hardware to conform to the paper color.

4. The SAVE filename SCREEN$ will save only the main Display File data. The second can be saved by a SAVE filename CODE 24576,6144. Be careful that you have the computer in 80-column mode when you load this data or you will overwrite the OS RAM routines and "crash" the system!! (The count for saving the display file is for the data portion only since the Attribute File area from 7800H-7AFFH (30720-31487) is not used by the video mode H/W in 80-Column mode.

```
ADL - ASC 002 80-COL.MODE SUPPORT        CRZ80/11 version 10.36.14        16-Mar-84  12:37:6        Page 1
DEFINITIONS    IO80.SRC

                   NAME ADL - ASC 002 80-COL.MODE SUPPORT
        ;
        ;
        ;
        ;
        ;
        ;
        ;
        ;                  ************************************
        ;                  *                                  *
        ;                  *               TIMEX              *
        ;                  * APPLICATION DEVELOPMENT LIBRARY  *
        ;                  *                                  *
        ;                  * NAME: 80-COL.MODE SUPPORT        *
        ;                  *                                  *
        ;                  * ASC NO:  002                     *
        ;                  * VERSION: 001                     *
        ;                  * AUTHOR:  C. CORCORAN/D. BOYLE    *
        ;                  * DATE:    12/16/83                *
        ;                  ************************************
```

APPENDIX
C-2

```
ADL - ASC 002 80-COL.MODE SUPPORT        CRZ80/11 version 10.36.14        16-Mar-84  12:37:6        Page 2
DEFINITIONS    IO80.SRC

                         SUBTTL DEFINITIONS
              ;
              ;
              ;                              ****DEFINITIONS****
              ;
                         INTERN  WRCHAR, WRSTRG, SETCUR, SETATT, SETMSK, CLRSCN, SCROLL
                         INTERN  GTCHAR, GETATT, GETCUR
              ;
                         INTERN  WRCHRB, WRSTRB, SETCUB, SETATB, SETMSB, CLRSCB, SCRLB
                         INTERN  GTCHRB, GETATB, GETCUB
              ;
                         INTERN  SETMODE, SETMOB
              ;
              ;
=0018         SCRSZ          EQU      24         ; 24 LINES
=1701         SCINIT         EQU      1701H      ; SCROLL CONTROL INITIALIZATION
=1800         CLINIT         EQU      1800H      ; CLEAR SCREEN CTL. INIT.
=047E'        CHRSET         EQU      ((CHRST)-100H)  ;CHAR.TABLE-100H
=077E'        GRPHST         EQU      ((GRPST)-100H) ; GRAPHICS TABLE
              ;
=0E8E         CHNGVID        EQU      0E8EH      ; ROUTINE IN ROM EXTENSION
=1720         RECLEN         EQU      1720H      ; ROUTINE IN HOME ROM
              ;
=00FF         HREXPT         EQU      0FFH       ; HOME ROM EXT.SELECT PORT (BIT 7)
=00F4         DKHSPT         EQU      0F4H       ; DOCK HORIZONTAL SELECT PORT
              ;
=5C4B         VARS           EQU      5C4BH      ; SYSTEM VARIABLES
=5C65         STKEND         EQU      5C65H      ;
=5C7B         UDG            EQU      5C7BH      ;
=5C7D         COORDS         EQU      5C7DH      ;
=5CB2         RAMTOP         EQU      5CB2H      ;
=5CB4         PRAMT          EQU      5CB4H      ;
=5CC2         VIDMOD         EQU      5CC2H      ;
=5CC3         PARAMS         EQU      5CC3H      ; (Location 23747)
=6840         DRIVES         EQU      6840H      ;
=12C0         INSERTSZ       EQU      7B00H-DRIVES
=0840         MOVESZ         EQU      DRIVES-6000H
=F7C0         DEST7          EQU      0FFFFH-MOVESZ+1
=97C0         FIX            EQU      DEST7-6000H

=1000         FIXTBL         EQU      1000H

```

```
                                    SUBTTL INPUTS AND ENTRIES
                        ;
                        ;
                        ;
                        ;                   **PARAMETER INPUTS AND ENTRY POINTS FROM BASIC**
                        ;
                        ;                                                                 WITH
                        ;                                                            MODULE LOADED
                        ;                                                            AT 57344(E000H)
                        ;                                                            DECIMAL ADDRESS
                        ;                                                            ---------------
0000'  20               DATAB           DEFB    20H     ; CHAR.CODE FROM BASIC          57344
0001'  C3 003F'         WRCHRB:         JP      WRCHO   ; ENTRY TO WRITE CHARACTER      57345
0004'  C3 0171'         WRSTRB:         JP      WRSTRO  ; ENTRY TO WRITE STRING         57347
                        ;                               ; (see PARAMS above)
0007'  0000             LINCOL          DEFW     0      ; SET CURSOR PARAMETERS
                                                        ;   LINCOL=COL. (0-79)          57351
                                                        ;   LINCOL+1=LINE (0-23)        57352
0009'  C3 01BA'         SETCUB:         JP      SETCB0  ; ENTRY TO SET CURSOR POSN.     57353
000C'  1800             CLRCTL          DEFW    1800H   ; CLEAR SCREEN CONTROLS
                                                        ;   CLRCTL=STARTING LINE NO.    57356
                                                        ;   CLRCTL+1=LINE COUNT         57357
000E'  C3 0278'         CLRSCB:         JP      CLRSB0  ; ENTRY TO CLEAR SCREEN         57358
0011'  38               ATTCTL          DEFB    38H     ; ATTRIBUTE CONTROL             57361
                                                        ;   BIT 7=FLASH (0 IN 80-COL.)
                                                        ;       6=BRIGHT(0 IN 80-COL.)
                                                        ;       5
                                                        ;       4=PAPER COLOR
                                                        ;       3
                                                        ;       2
                                                        ;       1= INK COLOR
                                                        ;       0
0012'  C3 02F3'         SETATB:         JP      SETAB0  ; ENTRY TO SET ATTRIBUTES       57362
0015'  00               MSKCTL          DEFB    0       ; MASK CONTROL FROM BASIC:      57365
                                                        ;   BIT 2=INVERSE
                                                        ;       0=OVER
0016'  C3 031D'         SETMSB:         JP       SETMB0 ; ENTRY TO SET MASK CONTROLS    57366
0019'  0000             GETCTL          DEFW     0      ; 'GET' CONTROL FROM BASIC      57369
                                                        ; FORMAT IS AS FOR LINCOL
001B'  C3 0326'         GTCHRB:         JP       GTCHB0 ; ENTRY TO GET CHARACTER        57371
001E'  C3 03CD'         GETATB:         JP       GETAB0 ; ENTRY TO GET ATTRIBUTE        57374
0021'  C3 03D4'         GETCUB:         JP       GETCB0 ; ENTRY TO GET CURSOR POSN.     57377
0024'  00               VIMODE          DEFB     0      ; VIDEO MODE CONTROL            57380
                                                        ;       0=NORMAL
                                                        ;       8=80-COL.MODE
0025'  C3 03F1'         SETMOB:         JP       STMD80 ; ENTRY TO SET VIDEO MODE       57381
0028'  1701             SCRCTL          DEFW     1701H  ; SCROLL CONTROL
                                                        ;   SCRCTL=STARTING LINE NO.    57384
                                                        ;   SCRCTL+1=LINE COUNT         57385
002A'  C3 01CA'         SCRLB:          JP       SCRL80 ; ENTRY TO SCROLL               57386
```

```
                                    SUBTTL  OTHER VARIABLES
                        ;
002D'  17               BOTLN           DEFB     17H    ; BOTTOM LINE (LINE AFTER       57389
                                                        ; WHICH SCREEN IS CONSIDERED
                                                        ; FULL.  AUTOMATIC SCROLL
                                                        ; WILL BE DONE IF SCRLCT
                                                        ; DOES NOT DECREMENT TO 0.
002E'  01               SCRLCT          DEFB     1      ; SCROLL COUNT - 1 PLUS NO.     57390
                                                        ; OF TIMES AUTOMATIC SCROLL
                                                        ; WILL BE DONE.
002F'  047E'            CHTBL           DEFW    CHRSET  ; ADDRESS OF CHARACTER TABLE    57391
0031'  077E'            GRTBL           DEFW    GRPHST  ; ADDRESS OF STD.GRAPHICS TBL.  57393
0033'  50               LINLEN          DEFB     50H    ; LINE LENGTH(80 OR 85)         57395
0034'  1851             CURPOS          DEFW    1851H   ; CURRENT POSITION              57396
                        ;                               ; (INTERNAL FORMAT)
0036'  4000             DFADRS          DEFW    4000H   ; CURRENT DISPLAY FILE ADDRS.   57398
0038'  00               MASKB           DEFB    0       ; MASK TO BE APPLIED TO         57400
                        ;                               ; DISPLAY CHARACTERS
0039'  38               ATTBYT          DEFB    38H     ; CURRENT ATTRIBUTES            57401
                        ;                               ; (38=BLACK ON WHITE)
003A'  80               GTINDX          DEFB    80H     ; INDEX FOR ADJUSTING           57402
                        ;                               ; CH.CODE IN GTCHAR
003B'  0000             STRGCT          DEFW     0H     ; REMAINING COUNT FROM WRSTRG
                        ;                               ; WHEN 'SCREEN FULL'            57403
003D'  01               MARGIN          DEFB    1       ; MARGIN ADJUST (0-2)           57405
003E'  07               DFBIT           DEFB    7       ; BIT POSN.IN LINE(7,1,3,5)     57406
```

```
                        SUBTTL WRITE CHARACTER
                ;
003F'                   WRCH0:                          ; HERE FROM BASIC ENTRY TO DISPLAY THE
                                                        ; CHARACTER WHOSE CODE IS IN 'DATAB'
003F'   3A 0000'                LD      A,(DATAB)
                ;
0042'                   WRCHAR:                         ; ENTRY WITH CODE IN A
0042'   CD 0558'                CALL    LDPOSN          ; LOAD REGISTERS FOR CURRENT POSITION
                                                        ;   BC=CURSOR POSITION FROM 'CURPOS'
                                                        ;   HL=DISPLAY FILE ADDRESS FROM 'DFADRS
                                                        ;   A=CODE FOR CHAR. TO BE DISPLAYED
0045'   FE 20                   CP      20H             ; TEST VALID RANGE
0047'   DA 0147'                JP      C,INVPAR        ; < 20H
004A'   FE A5                   CP      0A5H            ;
004C'   D2 0147'                JP      NC,INVPAR       ; > A4H
004F'   C5                      PUSH    BC              ; SAVE CURSOR POSITION
0050'   FE 80                   CP      80H             ; TEST IF ASCII PRINTABLE (20H-7FH)
0052'   38 15                   JR      C,WRCH12        ; YES
0054'   FE 90                   CP      90H             ; TEST IF STD.GRAPHICS(80-8FH)
0056'   38 09                   JR      C,WRCH11
0058'   ED 4B 5C7B              LD      BC,(UDG)        ; USER -DEFINED GRAPHICS(90-A4H)
005C'   05                      DEC     B               ; ADJUST ADDRESS-100H
005D'   D6 70                   SUB     70H             ; ADJUST FOR INDEX INTO TABLE
005F'   18 0C                   JR      WRCH13
0061'   ED 4B 0031'     WRCH11  LD      BC,(GRTBL)      ; STD. GRAPHICS TABLE
0065'   D6 60                   SUB     60H             ; ADJUST FOR INDEX INTO TABLE
0067'   18 04                   JR      WRCH13
0069'   ED 4B 002F'     WRCH12  LD      BC,(CHTBL)      ; CHARACTER TABLE
006D'   EB              WRCH13  EX      DE,HL           ; DE=POSN.IN DISPLAY FILE
006E'   26 00                   LD      H,0
0070'   6F                      LD      L,A             ; CODE IS INDEX INTO TABLE
0071'   29                      ADD     HL,HL
0072'   29                      ADD     HL,HL
0073'   29                      ADD     HL,HL
0074'   09                      ADD     HL,BC           ; HL=PIXEL PATTERN IN TABLE
0075'   C1                      POP     BC
0076'   EB                      EX      DE,HL           ; DE=PIXEL PATTERN IN TABLE/HL=DF
0077'   79                      LD      A,C             ; TEST IF END OF LINE
0078'   3D                      DEC     A
0079'   3A 0033'                LD      A,(LINLEN)
007C'   20 05                   JR      NZ,WRCH14
007E'   3C                      INC     A               ; START OF NEW LINE
007F'   05                      DEC     B               ; BUMP LINE NO.
0080'   4F                      LD      C,A             ; LINLEN+1=START OF LINE
0081'   18 01                   JR      WRCH15
0083'   3C              WRCH14  INC     A
0084'   B9              WRCH15  CP      C               ; TEST IF START OF LINE
0085'   D5                      PUSH    DE
0086'   CC 0148'                CALL    Z,TVFULO        ; TEST IF PAST "BOTTOM" LINE
0089'   D1                      POP     DE
                                                        ; HERE TO PUT CHARACTER IN DISPLAY FILE
008A'   C5              WRCH2   PUSH    BC              ; CURSOR POSITION
```

```
008B'   E5                      PUSH    HL              ; DF ADDRESS
008C'   3A 003B'                LD      A,(MASKB)       ; GET OVER AND INVERSE CONTROLS
008F'   06 FF                   LD      B,-1
0091'   1F                      RRA
0092'   38 01                   JR      C,WRCH3         ; IF XORING NEW INTO OLD
0094'   04                      INC     B               ; B=-1 IF XORING  =0 IF NOT
0095'   1F              WRCH3   RRA
0096'   1F                      RRA
0097'   9F                      SBC     A,A
0098'   4F                      LD      C,A             ; C=-1 FOR INVERSE  =0 IF NOT
0099'   3E 08                   LD      A,8             ; SCAN COUNT
009B'   08              WRCH5   EX      AF,AF'          ; SAVE SCAN COUNT IN ALTERNATE
009C'   C5                      PUSH    BC              ; SAVE MASK VALUES
009D'   D5                      PUSH    DE              ; SAVE CHAR.TABLE ADRS
009E'   DD 21 0000              LD      IX,0            ; SAVE PTR.TO STACK
00A2'   DD 39                   ADD     IX,SP
00A4'   56                      LD      D,(HL)          ; READ SCAN LINE FROM DF
00A5'   E5                      PUSH    HL              ; SAVE ADDRESS
00A6'   7C                      LD      A,H
00A7'   EE 20                   XOR     20H             ; TOGGLE TO ALTERNATE DF
00A9'   67                      LD      H,A
00AA'   CB 6F                   BIT     5,A             ; TEST WHICH DF
00AC'   20 01                   JR      NZ,WRCH6        ; IN DF2
00AE'   23                      INC     HL              ; NEXT BYTE
00AF'   5E              WRCH6   LD      E,(HL)          ; READ SCAN LINE FROM ALTERNATE DF
00B0'   EB                      EX      DE,HL           ; SCANS TO HL. LAST DF POS.IN DE
00B1'   7B                      LD      A,E             ; TEST IF "OVER" IS ACTIVE
00B2'   A7                      AND     A
00B3'   20 1A                   JR      NZ,NOXOR        ; YES-RETAIN OLD DATA
00B5'   3A 003E'                LD      A,(DFBIT)       ; NO- CLEAR OLD DATA AT CHAR.POSN.
00B8'   D6 07                   SUB     7               ;
00BA'   ED 44                   NEG
00BC'   01 03FF                 LD      BC,03FFH        ; MASK
00BF'   28 08                   JR      Z,NORR1         ; NO NEED TO ADJUST(CHAR.STARTS AT BIT 7)
00C1'   37                      SCF
00C2'   CB 18           NEXT1   RR      B               ; SHIFT MASK 'A' TIMES
00C4'   CB 19                   RR      C               ; (6 0'S START AT BIT 1 OF B, BIT 3 OF B,
00C6'   3D                      DEC     A               ;  OR BIT 5 OF B)
00C7'   20 F9                   JR      NZ,NEXT1
00C9'   7C              NORR1   LD      A,H             ; SCAN LINE FROM DF
00CA'   A0                      AND     B
00CB'   67                      LD      H,A             ; RETAIN ADJACENT CHAR.PIXELS
00CC'   7D                      LD      A,L             ; CLEAR CURRENT CHAR.PIXELS
00CD'   A1                      AND     C
00CE'   6F                      LD      L,A             ; HL=OLD BIT ROW
00CF'   3A 003E'        NOXOR   LD      A,(DFBIT)       ; GET STARTING BIT POSN.
00D2'   D6 07                   SUB     7
00D4'   ED 44                   NEG
00D6'   E5                      PUSH    HL              ; SAVE SCANS
00D7'   DD 6E 00                LD      L,(IX)          ; PTR. TO CHAR.SET
00DA'   DD 66 01                LD      H,(IX+1)
00DD'   46                      LD      B,(HL)          ; SCAN LINE FROM CHAR.SET TO BC
```

```
      00DE'  0E 00          247           LD    C,0            ; (PIXELS IN B, BITS 7-2)
      00E0'  F5             248           PUSH  AF             ; SAVE A AND FLAGS
      00E1'  78             249           LD    A,B            ; PIXELS FROM CHAR. SET
      00E2'  E6 FC          250           AND   0FCH           ; LIMIT TO 6 PIXELS
      00E4'  47             251           LD    B,A            ;
      00E5'  F1             252           POP   AF             ; RESTORE A AND FLAGS
      00E6'  E1             253           POP   HL             ; RESTORE SCANS
      00E7'  28 08          254           JR    Z,NORR2        ; NO SHIFT NEEDED
      00E9'  A7             255           AND   A              ; CLEAR CARRY
      00EA'  CB 18          256  NEXT2    RR    B              ; SHIFT 'A' TIMES
      00EC'  CB 19          257           RR    C
      00EE'  3D             258           DEC   A
      00EF'  20 F9          259           JR    NZ,NEXT2
      00F1'  7C             260  NORR2    LD    A,H            ; SCAN FROM DF
      00F2'  A8             261           XOR   B              ; INSERT/COMBINE NEW CHAR.
      00F3'  67             262           LD    H,A
      00F4'  7D             263           LD    A,L
      00F5'  A9             264           XOR   C
      00F6'  6F             265           LD    L,A            ; DF XOR CH.SET->HL
      00F7'  DD 7E 02       266           LD    A,(IX+2)       ; TEST IF INVERSE ACTIVE
      00FA'  A7             267           AND   A
      00FB'  28 1A          268           JR    Z,NOINVERT
      00FD'  3A 003E'       269           LD    A,(DFBIT)
      0100'  D6 07          270           SUB   7
      0102'  ED 44          271           NEG
      0104'  01 FC00        272           LD    BC,0FC00H      ; MASK TO INVERT
      0107'  28 08          273           JR    Z,NORR3
      0109'  A7             274           AND   A
      010A'  CB 18          275  NEXT3    RR    B              ; SHIFT MASK 'A' TIMES
      010C'  CB 19          276           RR    C
      010E'  3D             277           DEC   A
      010F'  20 F9          278           JR    NZ,NEXT3
      0111'  7C             279  NORR3    LD    A,H
      0112'  A8             280           XOR   B              ; INVERT CHARACTER
      0113'  67             281           LD    H,A
      0114'  7D             282           LD    A,L
      0115'  A9             283           XOR   C
      0116'  6F             284           LD    L,A
      0117'  EB             285  NOINVERT EX    DE,HL          ; DF ADRS. TO HL-SCAN LINE IN DE
      0118'  73             286           LD    (HL),E         ; WRITE SCAN LINE TO DF
      0119'  E1             287           POP   HL             ; ALTERNATE DF
      011A'  72             288           LD    (HL),D         ; WRITE SCAN LINE TO DF
      011B'  D1             289           POP   DE             ; CHAR.SET
      011C'  C1             290           POP   BC             ; OVER/INVERSE INDICATORS
      011D'  08             291           EX    AF,AF'         ; RESTORE SCAN COUNT
      011E'  24             292           INC   H              ; NEXT SCAN IN DF
      011F'  13             293           INC   DE             ; NEXT BYTE IN CHAR.FILE
      0120'  3D             294           DEC   A              ; TEST IF MORE SCANS
      0121'  C2 0098'       295           JP    NZ,WRCH5
      0124'  E1             296  WRCH7    POP   HL             ; TOP SCAN IN DF
      0125'  C1             297           POP   BC             ; CURSOR POSITION
      0126'  0D             298           DEC   C              ; ADJUST CURSOR POSITION
```

```
      0127'  3A 003E'       299           LD    A,(DFBIT)      ; ADJUST BIT POSITION
      012A'  D6 06          300           SUB   6
      012C'  32 003E'       301           LD    (DFBIT),A      ; STORE UPDATED POSITION
      012F'  30 0E          302           JR    NC,WRCHXT      ; NEXT CHAR.IN SAME BYTE
      0131'  C6 08          303           ADD   A,8            ; NEXT CHAR.IN NEXT BYTE
      0133'  32 003E'       304           LD    (DFBIT),A      ; STORE ADJUSTED VALUE
      0136'  7C             305           LD    A,H            ; ADJUST DF ADRS TO NEXT BYTE
      0137'  EE 20          306           XOR   20H            ; TOGGLE TO ALTERNATE DF
      0139'  67             307           LD    H,A
      013A'  CB 6F          308           BIT   5,A            ; TEST WHICH DF
      013C'  20 01          309           JR    NZ,WRCHXT      ; DONE IF DF2
      013E'  23             310           INC   HL             ; NEXT BYTE IN DF1
      013F'  CD 0550'       311  WRCHXT   CALL  STPOSN         ; STORE NEW POSITION
      0142'  0E 00          312  GOODRET  LD    C,0            ; RETURN BC=0
      0144'  06 00          313  ERRRET   LD    B,0            ; ENTER HERE WITH C NON-ZERO
      0146'  C9             314           RET
                            315  ;
      0147'  0E 01          316  INVPAR   LD    C,1            ; RETURN BC=1 FOR INVALID PARAMETERS
      0149'  18 F9          317           JR    ERRRET
                            318  ;
      014B'  3E 18          319  TVFULO   LD    A,SCRSZ        ; TEST IF NEW LINE IS OFF SCREEN
      014D'  90             320           SUB   B              ; A=LINE NO.
      014E'  57             321           LD    D,A            ; SAVE IN D
      014F'  3A 002D'       322           LD    A,(BOTLN) ; GET BOTTOM LINE
      0152'  BA             323           CP    D
      0153'  D2 0507'       324           JP    NC,UPDPOSN     ; ON SCREEN - RETURN TO WRITE CHAR.
                            325                                ;  VIA UPDATE AND STORE POSITION
      0156'  3A 002E'       326           LD    A,(SCRLCT)     ; TEST SCROLL COUNT
      0159'  3D             327           DEC   A
      015A'  20 08          328           JR    NZ,TVFUL1      ; DO AUTOMATIC SCROLL USING SCRCTL
      015C'  3E 01          329           LD    A,1            ; REINITIALIZE TO 1
      015E'  32 002E'       330           LD    (SCRLCT),A
      0161'  C1             331           POP   BC
      0162'  C1             332           POP   BC             ; DISCARD RETURN TO WRITE CHAR.
      0163'  0E 03          333           LD    C,3            ; RETURN BC=3 FOR SCREEN FULL
      0165'  18 DD          334           JR    ERRRET
      0167'  32 002E'       335  TVFUL1   LD    (SCRLCT),A     ; UPDATE VARIABLE
      016A'  ED 4B 0028'    336           LD    BC,(SCRCTL)    ; GET SCROLL CONTROLS (STARTING LINE
                            337                                ;   AND LINE COUNT)
      016E'  C3 01E4'       338           JP    SCRLO          ; RETURN TO WRITE CHAR. VIA SCROLL
                            339  ;
```

```
                          SUBTTL WRITE STRING
                  ;                                  ; HERE FROM BASIC ENTRY TO
                  ;                                  ; WRITE CHARACTER STRING TO SCREEN.
                  ;                                  ; STRING IDENTIFIER (CH.CODE) IN
                  ;                                  ; SYSTEM VARIABLE PARAMS AT 5CC3H
0171'  3A 5CC3    WRSTR0  LD    A,(PARAMS)
0174'  E6 1F              AND   1FH                  ; MASK OFF UPPER BITS
0176'  F6 40              OR    40H                  ; STRING VARIABLE IDENTIFIER
0178'  57                 LD    D,A                  ; SAVE IN D
0179'  2A 5C4B            LD    HL,(VARS)            ; FIND STRING
017C'  7E         WRSTR1  LD    A,(HL)               ;
017D'  E6 7F              AND   07FH                 ; TEST IF END OF VARS AREA
017F'  28 35              JR    Z,NOSTRG             ; NO FIND - RETURN BC=2
0181'  BA                 CP    D                    ; TEST IF MATCH
0182'  28 08              JR    Z,WRSTR2             ; FOUND STRING
0184'  D5                 PUSH  DE                   ; SAVE STRING ID
0185'  CD 1720            CALL  RECLEN               ; RETURNS ADRS.OF NEXT VAR.IN DE
0188'  EB                 EX    DE,HL                ; ADRS. TO HL
0189'  D1                 POP   DE                   ; RESTORE STRING ID
018A'  18 F0              JR    WRSTR1
018C'  23         WRSTR2  INC   HL                   ; GET LENGTH
018D'  4E                 LD    C,(HL)
018E'  23                 INC   HL
018F'  46                 LD    B,(HL)
0190'  23                 INC   HL                   ; FIRST TEXT CODE
0191'  78                 LD    A,B                  ; TEST IF NULL STRING
0192'  B1                 OR    C                    ;
0193'  C8                 RET   Z                    ; RETURN IF SO
                  ;
                  ;                                  ; ENTRY FROM MACHINE CODE WITH
                  ;                                  ; ADDRESS OF CHAR.CODE "STRING"
                  ;                                  ; IN HL AND LENGTH IN BC
                  ;
0194'  7E         WRSTRG  LD    A,(HL)               ; GET CODE
0195'  E5                 PUSH  HL                   ; SAVE ADRS. AND
0196'  C5                 PUSH  BC                   ; COUNT
0197'  CD 0042'           CALL  WRCHAR               ; WRITE "A"
019A'  79                 LD    A,C                  ; TEST IF GOOD
019B'  B0                 OR    B
019C'  20 09              JR    NZ,WRSTX1            ; EXIT IF INVALID CODE OR
                                                     ; IF SCREEN FULL
019E'  C1         WRSTR3  POP   BC                   ; COUNT
019F'  E1                 POP   HL                   ; ADDRESS
01A0'  23                 INC   HL                   ; NEXT CHAR.
01A1'  0B                 DEC   BC                   ; ADJUST COUNT
01A2'  78                 LD    A,B                  ; TEST IF DONE
01A3'  B1                 OR    C
01A4'  20 EE              JR    NZ,WRSTRG            ; WRITE NEXT CHAR.
01A6'  C9                 RET                        ; RETURN BC=0
                  ;
01A7'  79         WRSTX1  LD    A,C                  ; SAVE ERROR
01A8'  FE 01              CP    1                    ; TEST IF UNRECOGNIZED CODE
```

```
01AA'  28 F2              JR    Z,WRSTR3             ; CONTINUE
01AC'  E1                 POP   HL                   ; REMAINING COUNT TO HL
01AD'  22 0039'           LD    (STRGCT),HL          ; STORE REMAINING COUNT
01B0'  E1                 POP   HL                   ; ADDRESS TO HL
01B1'  0E 03              LD    C,3                  ; RETURN BC=3 FOR SCREEN FULL
01B3'  06 00      WRSTX2  LD    B,0                  ;
01B5'  C9                 RET
                  ;
01B6'  0E 02      NOSTRG  LD    C,2                  ; RETURN BC=2 IF STRING NOT FOUND
01B8'  18 F9              JR    WRSTX2
                  ;
                  ;
                  ;
```

```
                          SUBTTL POSITION CONTROL
                  ;
01BA'             SETC80:                            ; HERE FROM BASIC ENTRY.  PARAMETERS
                                                     ; IN LINCOL
01BA'  ED 4B 0007'        LD   BC,(LINCOL)
                  ;
01BE'             SETCUR:                            ; ENTRY WITH LINE/COL. IN BC REG.
01BE'  CD 04E8'           CALL   TSTPAR              ; TEST PARAMETERS FOR VALIDITY
01C1'  CD 04FC'           CALL   CONVFM              ; CONVERT TO INTERNAL FORMAT
01C4'  CD 0507'           CALL   UPDPOSN             ; CALCULATE AND STORE POSITION
01C7'  C3 0142'           JP     GOODRET             ; RETURN BC=0
                  ;
```

```
                                  SUBTTL SCROLL
                    ;
                    ;
01CA'               SCRLBC:                           ; HERE FROM BASIC ENTRY TO SCROLL
                    ;                                 ; SCREEN
01CA'  ED 4B 0028'                LD    BC,(SCRCTL)   ; GET CONTROL INFO.
                    ;
01CE'               SCROLL:                           ; HERE WITH CONTROLS IN BC
                                                      ;  B=NO. OF LINES
                                                      ;  C=STARTING LINE NO.
01CE'  78                         LD    A,B           ; TEST VALIDITY
01CF'  A7                         AND   A             ;
01D0'  CA 0147'                   JP    Z,INVPAR      ; ERROR IF COUNT=0
01D3'  81                         ADD   A,C
01D4'  FE 01                      CP    1
01D6'  DA 0147'                   JP    C,INVPAR      ; ERROR IF B+C<1
01D9'  FE 19                      CP    25
01DB'  D2 0147'                   JP    NC,INVPAR     ; ERROR IF B+C>24
01DE'  CD 01E4'                   CALL  SCRL0         ; DO SCROLL
01E1'  C3 0142'                   JP    GOODRET       ; RETURN BC=0
                    ;
01E4'  C5           SCRL0         PUSH  BC
01E5'  3E 18                      LD    A,SCRSZ       ; GET STARTING LINE IN INTERNAL FORMAT
01E7'  91                         SUB   C
01E8'  47                         LD    B,A
01E9'  3A 0033'                   LD    A,(LINLEN)
01EC'  3C                         INC   A             ; COL. 0
01ED'  4F                         LD    C,A
01EE'  CD 053F'                   CALL  LNBU
01F1'  C1                         POP   BC
01F2'  C5                         PUSH  BC            ; SAVE ORIG.BC FOR EXIT
01F3'  7D           TESTAD        LD    A,L           ; TEST IF AT START OF BLOCK
01F4'  A7                         AND   A
01F5'  28 51                      JR    Z,STBLK       ; YES
01F7'  07                         RLCA
01F8'  07                         RLCA
01F9'  07                         RLCA
01FA'  4F                         LD    C,A           ; GET NO. OF LINES THIS BLOCK
01FB'  3E 08                      LD    A,8
01FD'  91                         SUB   C
01FE'  B8                         CP    B             ; TEST AGAINST TOTAL LINES
01FF'  38 3F                      JR    C,GRBLK       ; TOTAL GREATER THAN THIS BLOCK
0201'  78           INSDBLK       LD    A,B
0202'  06 00                      LD    B,0           ; REMAINING COUNT
0204'  C5                         PUSH  BC
0205'  47           LOOP          LD    B,A           ; B=LINES THIS BLOCK
0206'  0E 08                      LD    C,8           ; C=SCAN COUNT
0208'  78           LOOP0         LD    A,B
0209'  C5                         PUSH  BC            ; SAVE SCAN COUNT
020A'  0F                         RRCA
020B'  0F                         RRCA
020C'  0F                         RRCA                ; CALCULATE NO. OF BYTES
```

```
020D'  4F                         LD    C,A
020E'  06 00                      LD    B,0           ; BC=32*# OF LINES
0210'  EB           LOOP1         EX    DE,HL
0211'  21 FFE0                    LD    HL,-20H       ; GET ADRS. OF PREV. LINE
0214'  19                         ADD   HL,DE
0215'  EB                         EX    DE,HL         ; TO DE
0216'  C5                         PUSH BC       ; SAVE COUNT
0217'  E5                         PUSH HL       ; SAVE ADDRESS
0218'  ED B0                      LDIR          ; DO MOVE
021A'  E1                         POP   HL
021B'  C1                         POP   BC
021C'  7C                         LD    A,H
021D'  CB 6F                      BIT   5,A           ; TEST IF DP1
021F'  20 05                      JR    NZ,NXTSC      ; NO
0221'  F6 20                      OR    20H
0223'  67                         LD    H,A           ; DO DP2
0224'  18 EA                      JR    LOOP1
0226'  E6 DF        NXTSC         AND   0DFH          ; BACK TO DP1
0228'  67                         LD    H,A
0229'  24                         INC   H             ; NEXT SCAN LINE
022A'  C1                         POP   BC            ; SCAN COUNT
022B'  0D                         DEC   C
022C'  20 DA                      JR    NZ,LOOP0      ; MORE SCANS
022E'  C1                         POP   BC            ; RESIDUAL LINE COUNT
022F'  78                         LD    A,B
0230'  A7                         AND   A
0231'  28 04                      JR    Z,SCRLXT      ; DONE
0233'  2E 00                      LD    L,0           ; START OF NEXT BLOCK
0235'  18 BC                      JR    TESTAD        ; DO REMAINING LINE(S)
0237'  C1           SCRLXT        POP   BC            ; ORIG.BC
0238'  79                         LD    A,C           ; STARTING LINE
0239'  80                         ADD   A,B           ; ADD NO. OF LINES MOVED
023A'  3D                         DEC   A             ; LAST LINE SCROLLED
023B'  4F                         LD    C,A
023C'  06 01                      LD    B,1           ; CLEAR 1 LINE
023E'  18 52                      JR    CLRSC0        ; CLEAR VACATED LINE AND RETURN
                    ;
0240'  4F           GRBLK         LD    C,A
0241'  78                         LD    A,B
0242'  91                         SUB   C             ; ADJUST TOTAL LINE COUNT BY NO.
0243'  47                         LD    B,A           ; OF LINES THIS BLOCK
0244'  C5                         PUSH  BC
0245'  79                         LD    A,C           ; LOAD A NO. OF LINES THIS BLOCK
0246'  18 BD                      JR    LOOP
                    ;
0248'  05           STBLK         DEC    B            ; ADJUST TOTAL LINE COUNT-1
0249'  C5                         PUSH   BC
024A'  0E 08                      LD     C,8          ; SCAN COUNT
024C'  C5           STBLK0        PUSH   BC           ; SAVE SCAN COUNT
024D'  EB           STBLK1        EX     DE,HL
024E'  21 F8E0                    LD     HL,-720H
0251'  19                         ADD    HL,DE
```

```
     0252'  EB                     524            EX    DE,HL           ; ADRS. OF PREV. LINE
     0253'  01 0020                525            LD    BC,32           ; BYTE COUNT
     0256'  E5                     526            PUSH  HL
     0257'  ED B0                  527            LDIR                  ; DO MOVE
     0259'  E1                     528            POP   HL
     025A'  7C                     529            LD    A,H
     025B'  CB 6F                  530            BIT   5,A
     025D'  20 05                  531            JR    NZ,STBLK2
     025F'  F6 20                  532            OR   20H              ; DO DF2
     0261'  67                     533            LD    H,A
     0262'  18 E9                  534            JR    STBLK1
     0264'  E6 DF                  535    STBLK2  AND   0DFH            ; BACK TO DF1
     0266'  67                     536            LD    H,A
     0267'  24                     537            INC   H               ; TO NEXT SCAN LINE
     0268'  C1                     538            POP   BC
     0269'  0D                     539            DEC   C               ; TEST IF MORE SCANS
     026A'  20 E0                  540            JR    NZ,STBLK0
     026C'  C1                     541            POP   BC              ; REMAINING LINE COUNT
     026D'  78                     542            LD    A,B
     026E'  A7                     543            AND   A
     026F'  28 C6                  544            JR    Z,SCRLXT
     0271'  11 F820                545            LD    DE,-7E0H        ; ADJUST TO LINE 1
     0274'  19                     546            ADD   HL,DE
     0275'  C3 01F3'               547            JP    TESTAD          ; BC=LINE COUNT
                                   548                                  ; HL=DF ADDRESS
                                   549    ;
```

```
                                   551            SUBTTL CLEAR SCREEN
                                   552    ;
                                   553    ;
     0278'                         554    CLRS90:                         ; HERE FROM BASIC ENTRY TO CLEAR SCREEN
     0278'  ED 4B 000C'            555            LD    BC,(CLRCTL)     ; GET CONTROL INFO.
                                   556    ;
     027C'                         557    CLRSCN:                         ; ENTRY WITH BC=LINE COUNT AND
                                   558                                    ; STARTING LINE NO. FOR CLEAR
     027C'  78                     559            LD    A,B
     027D'  A7                     560            AND   A               ; TEST VALIDITY
     027E'  CA 0147'               561            JP    Z,INVPAR        ; ERROR IF COUNT=0
     0281'  81                     562            ADD   A,C
     0282'  FE 01                  563            CP    1
     0284'  DA 0147'               564            JP    C,INVPAR        ; ERROR IF B+C<1
     0287'  FE 19                  565            CP    25
     0289'  D2 0147'               566            JP    NC,INVPAR       ; ERROR IF B+C>24
     028C'  CD 0292'               567            CALL   CLRSC0         ; DO SERVICE
     028F'  C3 0142'               568            JP     GOODRET        ; RETURN BC=0
                                   569    ;
                                   570    ;
     0292'  C5                     571    CLRSC0  PUSH  BC
     0293'  3E 18                  572            LD    A,SCRSZ         ; CONVERT TO INTERNAL FORMAT
     0295'  91                     573            SUB   C
     0296'  47                     574            LD    B,A
     0297'  3A 0033'               575            LD    A,(CLINLEN)
     029A'  3C                     576            INC   A               ; SET TO COL.0
     029B'  4F                     577            LD    C,A
     029C'  CD 053F'               578            CALL   LNSU           ; GET ADDRESS
     029F'  50                     579            LD     D,B
     02A0'  59                     580            LD     E,C            ; SAVE POSITION
     02A1'  C1                     581            POP    BC             ; ORIG. BC
     02A2'  D5                     582            PUSH   DE
     02A3'  7D                     583    CLRSC1  LD     A,L            ; GET # OF LINES THIS BLOCK
     02A4'  07                     584            RLCA
     02A5'  07                     585            RLCA
     02A6'  07                     586            RLCA
     02A7'  4F                     587            LD     C,A
     02A8'  3E 08                  588            LD     A,8
     02AA'  91                     589            SUB    C
     02AB'  B8                     590            CP     B              ; COMPARE TO TOTAL LINE COUNT
     02AC'  38 30                  591            JR     C,CLRSC7
     02AE'  78                     592    CLRSC2  LD     A,B            ; NO. OF LINES
     02AF'  06 00                  593            LD     B,0            ; REMAINING LINES
     02B1'  C5                     594            PUSH   BC
     02B2'  47                     595    CLRSC3  LD     B,A
     02B3'  0E 08                  596            LD     C,8            ; SCAN COUNT
     02B5'  78                     597    CLRSC4  LD     A,B
     02B6'  C5                     598            PUSH   BC
     02B7'  E6 07                  599            AND    7
     02B9'  0F                     600            RRCA
     02BA'  0F                     601            RRCA
     02BB'  0F                     602            RRCA
```

```
    02BC'  4F                        LD     C,A           ; BC=32*NO. OF LINES
    02BD'  06 00                     LD     B,0           ; (=0 IF 256 FOR 8 LINES)
    02BF'  0D                        DEC    C             ; ADJUST
    02C0'  C5               CLRSC5   PUSH   BC
    02C1'  E5                        PUSH   HL
    02C2'  54                        LD     D,H
    02C3'  5D                        LD     E,L
    02C4'  36 00                     LD     (HL),00       ; CLEAR DF
    02C6'  13                        INC    DE
    02C7'  ED B0                     LDIR
    02C9'  E1                        POP    HL
    02CA'  C1                        POP    BC
    02CB'  7C                        LD     A,H
    02CC'  CB 6F                     BIT    5,A
    02CE'  20 05                     JR     NZ,CLRSC6
    02D0'  F6 20                     OR     20H
    02D2'  67                        LD     H,A           ; DO DF2
    02D3'  18 EB                     JR     CLRSC5
    02D5   E6 0F            CLRSC6   AND    0FH           ; RESTORE DF1
    02D7'  67                        LD     H,A
    02D8'  24                        INC    H             ; NEXT SCAN ROW
    02D9'  C1                        POP    BC            ; POP SCAN COUNT
    02DA'  0D                        DEC    C
    02DB'  20 D8                     JR     NZ,CLRSC4
    02DD'  C1                        POP    BC            ; TOTAL LINE COUNT
    02DE'  78                        LD     A,B
    02DF'  A7                        AND    A
    02E0'  28 05                     JR     Z,CLRSXT
    02E2'  2E 00                     LD     L,0           ; HL=START OF NEXT BLOCK
    02E4'  C3 02A3'                  JP     CLRSC1        ; B=REMAINING LINE COUNT
    02E7'  C1               CLRSXT   POP    BC            ; POSITION
    02E8'  C3 0507'                  JP     UPDPOSN       ; RETURN VIA UPDATE AND STORE POSITION
    02EB'  4F               CLRSC7   LD     C,A           ; SAVE NO. LINES THIS BLOCK
    02EC'  78                        LD     A,B
    02ED'  91                        SUB    C             ; ADJUST TOTAL LINE COUNT
    02EE'  47                        LD     B,A
    02EF'  C5                        PUSH   BC            ; REMAINING LINE COUNT
    02F0'  79                        LD     A,C           ; LINES THIS BLOCK
    02F1'  18 BF                     JR     CLRSC3        ;
```

```
                                         SUBTTL ATTRIBUTE CONTROL
                            ;
                            ;
                            ;
    02F3'                   SETAB0:                             ; HERE FROM BASIC ENTRY TO SET ATTRIBUTES
    02F3'  3A 0011'                      LD     A,(ATTCTL)      ; GET CONTROL INFO.
                            ;
    02F6'                   SETATT:                             ; ENTRY WITH ATTRIBUTE BYTE IN A
    02F6'  E6 07                         AND    7               ; GET INK SELECTION
    02F8'  4F                            LD     C,A             ; SAVE
    02F9'  3A 5CC2                       LD     A,(VIDMOD)      ; TEST IF DF2 OPEN
    02FC'  A7                            AND    A
    02FD'  CA 0147'                      JP     Z,INVPAR        ; INVALID IF DF2 NOT OPEN
    0300'  79                            LD     A,C
    0301'  17                            RLA
    0302'  17                            RLA
    0303'  17                            RLA                    ; SHIFT TO H/W POSITION
    0304'  F5                            PUSH   AF              ; SAVE ROTATED VALUE
    0305'  F6 06                         OR     6               ; SET H/W MODE
    0307'  47                            LD     B,A             ; VALUE FOR H/W
    0308'  DB FF                         IN     A,(HREXPT)      ;
    030A'  E6 C0                         AND    0C0H            ; PRESERVE BITS 7 AND 6
    030C'  B0                            OR     B               ; SET VIDEO MODE VALUE
    030D'  D3 FF                         OUT    (HREXPT),A      ; SET H/W
    030F'  F6 40                         OR     40H             ; UPDATE VIDMOD
    0311'  32 5CC2                       LD     (VIDMOD),A      ;
    0314'  F1                            POP    AF              ; INK SEL.IN BITS 3-5
    0315'  2F                            CPL                    ; GET COMPLEMENTARY COLOR
    0316'  B1                            OR     C               ; COMBINE WITH INK
    0317'  32 0039'                      LD     (ATTBYT),A      ; SAVE IN VARIABLE
    031A'  C3 0142'                      JP     GOODRET         ; RETURN BC=0
                            ;
                            ;
                            ;
    031D'                   SETMB0:                             ; HERE FROM BASIC ENTRY TO SET MASK
    031D'  3A 0015'                      LD     A,(MSKCTL)      ; GET CONTROL INFO.
                            ;
    0320'                   SETMSK:                             ; ENTRY WITH MASK VALUE IN A
    0320'  32 0038'                      LD     (MASKB),A       ; STORE MASK FOR APPLICATION TO FUTURE
    0323'  C3 0142'                      JP     GOODRET         ; DISPLAYS
                            ;
```

```
                                SUBTTL "GET" ROUTINES
                        ;
                        ;
0326'                   GTCHB0:                         ; HERE FROM BASIC ENTRY TO GET CHARACTER
                                                        ; (RETURNS CODE FOR CHARACTER AT
                                                        ;  POSITION SPECIFIED IN GETCTL)
0326'   ED 4B 0019'             LD    BC,(GETCTL)       ; GET CONTROL INFO.
                        ;
032A'                   GTCHAR:                         ; ENTRY WITH POSITION IN BC
032A'   CD 04EB'                CALL TSTPAR             ; TEST PARAMETERS
032D'   3A 003E'                LD    A,(DFBIT)         ; SAVE CURRENT BIT POSITION
0330'   F5                      PUSH  AF
0331'   CD 04FC'                CALL  CONVFM            ; CONVERT TO INTERNAL FORMAT
0334'   CD 050C'                CALL  CALCPOS           ; GET DF ADDRESS AND BIT POS.
0337'   ED 5B 002F'             LD    DE,(CHTBL)        ; CHAR.TABLE
033B'   06 60                   LD    B,96              ; NO. OF PRINTABLE CHARACTERS
033D'   3E 80                   LD    A,80H             ; SET ADJUSTMENT INDEX
033F'   32 003A'        GTCH1   LD    (GTINDX),A
0342'   14                      INC   D                 ; ADJUST TO START OF TABLE
0343'   C5              GTCH2   PUSH  BC                ; SAVE COUNT
0344'   E5                      PUSH  HL                ; SAVE ADRS. IN DF
0345'   D5                      PUSH  DE                ; SAVE ADRS. IN CHAR.TABLE
0346'   CD 0560'                CALL  GTC2BC            ; GET SCAN LINE FROM DF TO REG.B
                                                        ; BITS 7-2
0349'   78              GTCH22  LD    A,B
034A'   E6 FC                   AND   0FCH              ; 6 BITS TO A
034C'   47                      LD    B,A
034D'   EB                      EX    DE,HL             ; CHAR.SET PTR. TO HL
034E'   7E                      LD    A,(HL)            ; PIXEL ROW TO A
034F'   E6 FC                   AND   0FCH              ; MASK TO 6 BITS
0351'   A8                      XOR   B                 ; TEST AGAINST DF
0352'   28 10                   JR    Z,GTCH3           ; MATCH
0354'   F5                      PUSH  AF
0355'   3A 003A'                LD    A,(GTINDX)        ; TEST IF LOOKING AT STD.GRAPHICS
0358'   FE 90                   CP    90H
035A'   20 03                   JR    NZ,GTCH23
035C'   F1                      POP   AF
035D'   18 3B                   JR    GTCH4             ; DO NOT TEST INVERSE IF STD.GR.
035F'   F1              GTCH23  POP   AF
0360'   FE FC                   CP    0FCH              ; TEST IF MATCH ON INVERSE
0362'   20 36                   JR    NZ,GTCH4          ; DOES NOT MATCH
0364'   4F              GTCH3   LD    C,A               ; C=0 FOR MATCH  -4 FOR INVERSE
0365'   06 07                   LD    B,7               ; SCAN COUNT
0367'   EB              GTCH31  EX    DE,HL             ; DF ADRS.TO HL
0368'   C5                      PUSH  BC          ; SAVE MATCH AND SCAN COUNT
0369'   24                      INC   H           ; NEXT SCAN IN DF
036A'   13                      INC   DE          ; NEXT ROW IN CHAR.SET
036B'   CD 0560'                CALL  GTC2BC            ; NEXT SCAN ROW TO BC
036E'   78                      LD    A,B
036F'   E6 FC                   AND   0FCH
0371'   47                      LD    B,A               ;
0372'   EB                      EX    DE,HL             ; CHAR.SET PTR. TO HL
```

```
0373'   7E                      LD    A,(HL)            ; CHAR.SET ROW
0374'   E6 FC                   AND   0FCH              ; MASK TO 6 BITS
0376'   A8                      XOR   B                 ; TEST MATCH
0377'   C1                      POP   BC                ; GET PREV.MATCH AND SCAN COUNT
0378'   A9                      XOR   C
0379'   20 1F                   JR    NZ,GTCH4          ; NO MATCH-START AGAIN AT NEXT
037B'   10 EA                   DJNZ  GTCH31            ; DO NEXT SCAN
037D'   79                      LD    A,C               ; A=-4 IF MATCH ON INVERSE
037E'   C6 03                   ADD   A,3               ; SET TO -1 IF MATCH ON INVERSE
0380'   C1                      POP   BC                ; HERE IF MATCH- (SP)=PTR.TO CHAR.
0381'   C1                      POP   BC                ; IN TABLE;(SP+2)=CHAR.IN DF;
0382'   C1                      POP   BC                ; (SP+4)=CHAR.COUNT
0383'   4F                      LD    C,A               ; B=COUNT C=-1 IF MATCH ON INVERSE
0384'   3A 003A'                LD    A,(GTINDX)        ; CONVERT MATCH TO CHAR.CODE
0387'   90                      SUB   B
0388'   FE 20                   CP    20H               ; TEST IF MATCH ON SPACE
038A'   20 05                   JR    NZ,GTCH32         ; NO
038C'   0C                      INC   C                 ; TEST IF MATCH ON INVERSE
038D'   20 02                   JR    NZ,GTCH32
038F'   3E 8F                   LD    A,8FH             ; LOAD CODE FOR GRAPHICS BLOCK
0391'   4F              GTCH32  LD    C,A               ; RETURN IN REG. C OF BC PAIR
0392'   06 00                   LD    B,0               ; AND IN REG. A
0394'   F1                      POP   AF
0395'   32 003E'                LD    (DFBIT),A         ; RESTORE DFBIT
0398'   79                      LD    A,C               ; CHAR.CODE TO A
0399'   C9                      RET
                        ;
039A'   E1              GTCH4   POP   HL                ; PTR. TO CHR. SET
039B'   11 0008                 LD    DE,8              ; MOVE ON TO NEXT CHARACTER
039E'   19                      ADD   HL,DE
039F'   5D                      LD    E,L
03A0'   54                      LD    D,H
03A1'   E1                      POP   HL                ; DF ADDRESS
03A2'   C1                      POP   BC                ; CHAR. COUNT
03A3'   10 9E                   DJNZ  GTCH2             ; DECREMENT CHAR.COUNT AND LOOK AGAIN
                        ;
03A5'   3A 003A'                LD    A,(GTINDX)        ; TEST IF DONE
03A8'   FE 80                   CP    80H               ; TEST IF STD.CHR.SET
03AA'   20 0A                   JR    NZ,GTCH5          ; TRY GRAPHICS
03AC'   ED 5B 0031'             LD    DE,(GRTBL)
                                                              ; GRAPHICS TABLE
03B0'   06 10                   LD    B,16              ; NO. OF ENTRIES
03B2'   3E 90                   LD    A,90H
03B4'   18 89                   JR    GTCH1
03B6'   FE 90           GTCH5   CP    90H               ; TEST IF STD.GRAPHICS
03B8'   20 0C                   JR    NZ,GTCH6          ;
03BA'   ED 5B 5C7B              LD    DE,(UDG)          ; TRY USER-DEFINED GRAPHICS
03BE'   15                      DEC   D                 ; ADJUST ADDRESS-100H
03BF'   06 15                   LD    B,21              ; NO. OF ENTRIES
03C1'   3E A5                   LD    A,0A5H            ; INDEX ADJUST
03C3'   C3 033F'                JP    GTCH1

                        ;                               ; NO MATCH AT ALL
```

```
    03C6'  F1                 GTCH6   POP   AF                ; RESTORE ORIG. OFBIT
    03C7'  32 003E'                   LD    (OFBIT),A
    03CA'  48                         LD    C,B               ; BC=0
    03CB'  AF                         XOR   A                 ; A=0
    03CC'  C9                         RET

                                                          ; GET ATTRIBUTE BYTE
                                                          ; NOTE THAT IN 80-COL.MODE ALL SCREEN POSITIONS
                                                          ; HAVE THE SAME ATTRIBUTES, THEREFORE IT IS
                                                          ; NOT NECESSARY TO USE THE "GETCTL" POSITION
                                                          ; PARAMETERS
                                      ;
    03CD'                             GETAB0:             ; HERE FROM BASIC ENTRY TO GET ATTRIBUTE
                                      ;
    03CD'  3A 0039'           GETATT: LD    A,(ATTBYT) ; GET ATTRIBUTE BYTE
    03D0'  4F                         LD    C,A         ; PUT IN BC
    03D1'  06 00                      LD    B,0
    03D3'  C9                         RET
                              ;                           ; GET CURSOR POSITION
    03D4'                     GETC80:                     ; HERE FROM BASIC ENTRY
    03D4'                     GETCUR:
    03D4'  ED 4B 0034'                LD    BC,(CURPOS)          ; GET INTERNAL POSITION
    03D8'  CD 06FC'                   CALL  CONVFM               ; CONVERT TO USER FORMAT
    03DB'  3A 0033'                   LD    A,(LINLEN)           ; TEST IF END OF LINE
    03DE'  B9                         CP    C                    ; IF =80 OR 85
    03DF'  20 0B                      JR    NZ,GETC1             ; NO
    03E1'  0E 00                      LD    C,0                  ; NEXT POSN.START OF NEXT LINE
    03E3'  78                         LD    A,B
    03E4'  3C                         INC   A                    ; BUMP TO NEXT LINE
    03E5'  47                         LD    B,A
    03E6'  FE 18                      CP    24                   ; TEST IF OFF SCREEN
    03E8'  38 02                      JR    C,GETC1              ; NO
    03EA'  06 17                      LD    B,23                 ; POSN. IS AT BOTTOM LINE
    03EC'  ED 43 0007'        GETC1   LD    (LINCOL),BC          ; STORE FOR BASIC PROGRAM
    03F0'  C9                         RET                        ; VALUES ALSO IN BC
                              ;
```

```
                                          SUBTTL VIDEO MODE CONTROL
                              ;
                              ;
    03F1'                     STMOD80:                    ; HERE FROM BASIC ENTRY WITH MODE IN
                                                          ; "VIMODE"
    03F1'  3A 0024'                   LD  A,(VIMODE)
                              ;
    03F4'                     SETMODE:                    ; ENTRY WITH MODE IN A
                              ;
    03F4'  A7                         AND   A
    03F5'  28 4F                      JR    Z,SETMO1     ; TEST FOR VALIDITY
    03F7'  FE 08                      CP    8            ; 8=80 COL.MODE
    03F9'  C2 0147'                   JP    NZ,INVPAR    ; INVALID PARAMETERS
                              ;                          ;
                              ;                          ;
    03FC'  21 1701                    LD    HL,SCINIT    ; INITIALIZE VARIABLES
    03FF'  22 0028'                   LD    (SCRCTL),HL ; SCROLL CONTROL
    0402'  3E 17                      LD    A,23         ;
    0404'  32 002D'                   LD    (BOTLN),A    ; BOTTOM LINE
    0407'  3E 01                      LD    A,1          ;
    0409'  32 002E'                   LD    (SCRLCT),A ; SCROLL COUNT
    040C'  3E 50                      LD    A,80         ;
    040E'  32 0033'                   LD    (LINLEN),A ; LINE LENGTH
    0411'  3E 01                      LD    A,1          ;
    0413'  32 0030'                   LD    (MARGIN),A ; MARGIN
    0416'  21 1800                    LD    HL,CLINIT    ;
    0419'  22 000C'                   LD    (CLRCTL),HL ; CLEAR SCREEN CONTROL
    041C'  AF                         XOR   A
    041D'  32 0039'                   LD    (MASKB),A    ; MASK BYTE
    0420'  32 003B'                   LD    (STRGCT),A ; WRSTRG REMAINING COUNT
    0423'  32 003C'                   LD    (STRGCT+1),A ;
    0426'  21 047E'                   LD    HL,CHRSET    ; STO. CHAR. SET
    0429'  22 002F'                   LD    (CHTBL),HL ;
    042C'  21 077E'                   LD    HL,GRPHST    ; STO. GRAPHICS SET
    042F'  22 0031'                   LD    (GRTBL),HL ;
                              ;                          ;
                              ;                          ; INITIALIZE BASIC INPUTS
                              ;                          ;
    0432'  32 0000'                   LD    (DATAB),A    ; DATA BYTE
    0435'  32 0007'                   LD    (LINCOL),A ; COLUMN
    0438'  32 0008'                   LD    (LINCOL+1),A ; LINE
    043B'  32 0015'                   LD    (MSKCTL),A ; MASK CONTROL
    043E'  32 0019'                   LD    (GETCTL),A ; "GET" COL.
    0441'  32 001A'                   LD    (GETCTL+1),A ; "GET" LINE
    0444'  3E 06                      LD    A,6          ; SET H/W TO 64-COL.MODE
    0446'  47                 SETMO1  LD    B,A          ; SAVE MODE
    0447'  3A 5CC2                    LD    A,(VIDMOD)
    044A'  A7                         AND   A            ; TEST CURRENT MODE
    044B'  20 10                      JR    NZ,SETMO2
    044D'  B0                         OR    B            ; CURRENT MODE=0  TEST IF NEW MODE=0
    044E'  CA 0142'                   JP    Z,GOODRET    ; RETURN BC=0
    0451'  21 12C0                    LD     HL,INSERTSZ
```

```
0454'  11 0840                     LD     DE,MOVESZ
0457'  19                          ADD    HL,DE      ; HL=TOTAL ROOM NEEDED
0458'  ED 5B 5C65                  LD     DE,(STKEND)
045C'  19                          ADD    HL,DE      ; ADD MEMORY IN USE
045D'  DA 04A7'                    JP     C,EXTNRM   ; NOT ENOUGH MEMORY TO OPEN DF2
0460'  ED 5B 5C82                  LD     DE,(RAMTOP)
0464'  A7                          AND    A
0465'  ED 52                       SBC    HL,DE
0467'  D2 04A7'                    JP     NC,EXTNRM  ; NOT ENOUGH MEMORY
046A'  CD 04D2'            SETMD2  CALL   ENBLEXT    ; ENABLE ROM EXT.
046D'  78                          LD     A,B        ; MODE TO A
046E'  CD 04AC'                    CALL   GETVAL     ; H/W VALUE TO B; VIDMOD VALUE TO C
0471'  C5                          PUSH   BC         ; SAVE
0472'  78                          LD     A,B
0473'  CD 0E8E                     CALL   CHNGVID    ; CALL RTN. TO OPEN/CLOSE 2ND DF
0476'  CD 04DF'                    CALL ENBLHOME     ; REENABLE HOME BANK
0479'  C1                          POP    BC         ; VALUE FOR VIDMOD
047A'  79                          LD     A,C
047B'  32 5CC2                     LD     (VIDMOD),A; UPDATE VIDMOD
047E'  CB 77               UPDATE  BIT    6,A                 ; UPDATE SYSTEM VARS. BASED ON MODE
0480'  CA 0142'                    JP     Z,GOODRET           ; DONE IF MODE 0
0483'  3E C1               SXT4    LD     A,0C1H              ; 64/80-COL. MODE
0485'  B0                          OR     B                   ; STORE ATTRIBUTE BYTE BASED
0486'  2F                          CPL                        ; ON INK SELECTION
0487'  CB 38                       SRL    B
0489'  CB 38                       SRL    B
048B'  CB 38                       SRL    B
048D'  B0                          OR     B
048E'  32 0039'                    LD     (ATTBYT),A          ; ATTRIBUTE BYTE
0491'  32 0011'                    LD     (ATTCTL),A          ; BASIC PARAMETER
0494'  3A 0033'                    LD     A,(LINLEN)
0497'  3C                          INC    A
0498'  4F                          LD     C,A
0499'  06 18                       LD     B,18H               ; BC=HOME POSITION (LN.0/COL.0)
049B'  21 0000                     LD     HL,0
049E'  22 5C7D                     LD     (COORDS),HL         ; PLOT POSITION
04A1'  CD 0507'                    CALL   UPDPOSN             ; UPDATE AND STORE HOME POSITION
04A4'  C3 0142'                    JP     GOODRET             ; RETURN BC=0
04A7'  0E 02               EXTNRM  LD     C,2                 ; RETURN BC=2 FOR NO ROOM
04A9'  C3 0144'                    JP     ERRRET
                           ;
```

```
                                   SUBTTL INTERNAL SUB-RTNS.
                           ;
                           ;
                           ;
                                                       ; INPUT:  VIDEO MODE IN A
                                                       ; OUTPUT: H/W SETTING IN B
                                                       ;         VIDMOD SETTING IN C
                                                       ; RETURNS NZ STATUS IF MODE INVALID
                                                       ;
                                                       ;  VALID VALUES:  INPUT     H/W      VIDMOD
                                                       ;                 -----     ---      ------
                                                       ;   *=DISPLAY FILE ACTIVE AT SCREEN
                                                       ;
                                                       ;    DF1 ONLY        0        0         0
                                                       ;   DF1*& DF2       80        0        80
                                                       ;   DF1 & DF2*       1        1        81
                                                       ;  HIGH RES.GR.      2        2         2
                                                       ;  64/80-COLUMN   06 - 3E  06 - 3E   46 - 7E
04AC'  4F                  GETVAL  LD     C,A
04AD'  CB 47                       BIT    0,A
04AF'  20 16                       JR     NZ,TST01
04B1'  FE 80                       CP     80H
04B3'  28 1A                       JR     Z,SET0
04B5'  CB 7F                       BIT    7,A
04B7'  C0                          RET    NZ
04B8'  47                          LD     B,A
04B9'  FE 02                       CP     2
04BB'  C8                          RET    Z
04BC'  E6 C6                       AND    0C6H
04BE'  EE 06                       XOR    6
04C0'  C0                          RET    NZ
04C1'  3E 40                       LD     A,40H
04C3'  B1                          OR     C
04C4'  4F                          LD     C,A
04C5'  AF                          XOR    A
04C6'  C9                          RET
04C7'  FE 01               TST01   CP     1
04C9'  C0                          RET    NZ
04CA'  06 01                       LD     B,1
04CC'  0E 81                       LD     C,81H
04CE'  C9                          RET
04CF'  AF                  SET0    XOR   A
04D0'  47                          LD    B,A
04D1'  C9                          RET
                           ;
                           ;
                                                       ; ROUTINES TO ENABLE CHUNK 0 IN ROM EXT.
                                                       ; FOR ACCESS TO CHNGVID ROUTINE
04D2'  F5                  ENBLEXT PUSH   AF
04D3'  DB FF                       IN     A,(HREXPT)
04D5'  F6 80                       OR     80H        ; SELECT ROM EXT.
04D7'  D3 FF                       OUT    (HREXPT),A
```

```
0409'  3E 03              LD     A,3
040B'  D3 F4              OUT    (OKMSPT),A
040D'  F1                 POP    AF
040E'  C9                 RET
                  ;
040F'  F5         ENBLHOME  PUSH  AF
04E0'  AF                   XOR   A
04E1'  D3 F4                OUT    (OKMSPT),A
04E3'  DB FF                IN    A,(HREXPT)
04E5'  E6 3F                AND   03FH
04E7'  D3 FF                OUT   (HREXPT),A
04E9'  F1                   POP   AF
04EA'  C9                   RET
                  ;
                                                       ; TEST PARAMETER VALIDITY
                                                       ; IF NOT VALID, DISCARDS RETURN
                                                       ; AND EXITS VIA INVPAR
04EB'  3E 17      TSTPAR  LD    A,23                   ; TEST LINE >23
04ED'  B8                 CP    B
04EE'  30 04              JR    NC,TSTPR1
04F0'  F1         PARERR  POP   AF
04F1'  C3 0147'           JP    INVPAR
04F4'  3A 0033'   TSTPR1  LD    A,(LINLEN)
04F7'  3D                 DEC   A
04F8'  B9                 CP    C            ; TEST COL. >LINE LENGTH-1
04F9'  38 F5              JR    C,PARERR
04FB'  C9                 RET
                  ;
                                                       ; CONVERT LINE/COL. FROM USER TO
                                                       ; INTERNAL FORMAT AND VICE VERSA
                                                       ; USER FORMAT: LINES 0-23
                                                       ;              COL. 0-79(84)
                                                       ; INTERNAL FORMAT:
                                                       ;              LINES 24-1
                                                       ;              COL. (86)81-2
                                                       ;              (COL.1 END OF LINE)
                  ;
                  ;
04FC'  3A 0033'   CONVFM  LD     A,(LINLEN)
04FF'  3C                 INC    A
0500'  91                 SUB    C
0501'  4F                 LD     C,A                   ; CONVERT
0502'  3E 18              LD     A,SCRSZ
0504'  90                 SUB    B
0505'  47                 LD     B,A
0506'  C9                 RET
                  ;
                  ;
                  ;
0507'             UPDPOSN:                             ; ENTER HERE WITH BC=LINE/COL.IN
                                                       ; INTERNAL FORMAT
0507'  CD 050C'           CALL   CALCPOS               ; CALCULATE POSITION
```

```
050A'  18 44              JR     STPOSN                ; STORE UPDATED POSITION AND RETURN
                  ;
                  ;                                    ; ROUTINE TO CALCULATE POSITION IN DF
                  ;                                    ; UPDATES BIT POSITION IN VARIABLE DFBIT
                  ;                                    ; RETURNS DF ADDRESS IN HL.  PRESERVES
                  ;                                    ; LINE/COL.POSITION IN BC
                  ;
050C'  CD 053F'   CALCPOS CALL   LNBU                  ; GET DISPLAY FILE ADRS.FOR LINE
050F'  3A 0033'           LD     A,(LINLEN)            ; TEST WHICH DF
0512'  3C                 INC    A
0513'  91                 SUB    C
0514'  F5                 PUSH   AF                    ; SAVE COL.NO.(0-(LINLEN-1))
0515'  5F                 LD     E,A
0516'  87                 ADD    A,A
0517'  83                 ADD    A,E                   ; 3*<80-COL.POS.> / 4 = 64-COL.POS.
0518'  CB 3F              SRL    A
051A'  CB 3F              SRL    A
051C'  CB 47              BIT    0,A
051E'  28 06              JR     Z,CALCP1
0520'  F5                 PUSH   AF                    ; ODD COLS.ARE IN DF2
0521'  3E 20              LD     A,20H
0523'  B4                 OR     H                     ; IN DF2
0524'  67                 LD     H,A
0525'  F1                 POP    AF
0526'  A7         CALCP1  AND    A                     ; CLEAR CARRY
0527'  1F                 RRA                          ; COL/2 IS POSITION IN DISPLAY FILE
0528'  5F                 LD     E,A
0529'  3A 0030'           LD     A,(MARGIN)            ; GET ADJUSTMENT VALUE
052C'  83                 ADD    A,E
052D'  5F                 LD     E,A
052E'  16 00              LD     D,0                   ; DE CONTAINS OFFSET INTO LINE
0530'  19                 ADD    HL,DE                 ; HL CONTAINS DF ADDRESS
0531'  1E 07              LD     E,7
0533'  F1                 POP    AF                    ; A=COL.POSN.FOR 80 COLS.
0534'  E6 03              AND    3                     ;
0536'  28 02              JR     Z,CALCP2              ; STARTS AT BIT 7
0538'  5F                 LD     E,A                   ; STARTS AT BIT 1,3 OR 5
0539'  3D                 DEC    A
053A'  83         CALCP2  ADD    A,E
053B'  32 003E'           LD     (DFBIT),A
053E'  C9                 RET                          ; E=POS. HL=DF ADDRESS
                  ;
                  ;
053F'             LNBU:                                ; GET DISPLAY FILE ADDRESS
                                                       ; FOR START OF LINE IN B
053F'  3E 18              LD  A,SCRSZ
0541'  90                 SUB  B
0542'  57                 LD   D,A
0543'  0F                 RRCA
0544'  0F                 RRCA
0545'  0F                 RRCA
0546'  E6 E0              AND  0E0H
```

```
0548'  6F                         LD   L,A
0549'  7A                         LD   A,D
054A'  E6 18                      AND  18H
054C'  F6 40                      OR   40H
054E'  67                         LD   H,A
054F'  C9                         RET

0550'                     STPOSN:                          ; STORE CURSOR POSITION
0550'  ED 43 0034'                LD  (CURPOS),BC
0554'  22 0036'                   LD  (DFADRS),HL
0557'  C9                         RET
                          ;
0558'                     LDPOSN:                          ; LOAD CURSOR POSITION
0558'  ED 4B 0034'                LD  BC,(CURPOS)
055C'  2A 0036'                   LD  HL,(DFADRS)
055F'  C9                         RET
                          ;
                          ;
                          ;                                ; RTN. USED BY GTCHAR TO PUT
                          ;                                ; 6 PIXELS FROM DF IN B REG.BITS 7-2
                          ;                                ; FOR MATCHING AGAINST CHAR.SET
                          ;
0560'  E5                 GTC2BC  PUSH  HL                 ; SAVE DF ADRS.
0561'  46                         LD    B,(HL)             ; SCAN LINE FROM DF
0562'  7C                         LD    A,H
0563'  EE 20                      XOR   20H
0565'  67                         LD    H,A                ; TOGGLE TO ALTERNATE DF
0566'  CB 6F                      BIT   5,A                ; TEST WHICH DF
0568'  20 01                      JR    NZ,GTC2B1
056A'  23                         INC   HL
056B'  4E                 GTC2B1  LD    C,(HL)             ; BC CONTAINS CHAR.AT DFBIT
056C'  3A 003E'                   LD    A,(DFBIT)
056F'  D6 07                      SUB   7
0571'  ED 44                      NEG                      ; A=NO.OF BITS OFFSET IN BC
0573'  28 07                      JR    Z,GTC2B2           ; STARTS AT BIT 7
0575'  CB 11              GTCSHFT RL    C
0577'  CB 10                      RL    B                  ; SHIFT 6 PIXELS FOR CHARACTER
0579'  3D                         DEC   A                  ; TO B, BITS 7-2
057A'  20 F9                      JR    NZ,GTCSHFT
057C'  E1                 GTC2B2  POP   HL                 ;
057D'  C9                         RET                      ; CHAR.IN B, BITS 7-2
                          ;

                                  INCLUDE CHST80
                                  SUBTTL CHAR.SET FOR 40/80 COL.MODES

                          ;
                          ; Dot patterns for characters on the TV screen:
                          ;       character with code x is at offsets 8x (top line) to 8x+7 (bottom line)
                          ;       0 = white, 1 = black, no margins between character spaces either
                          ;               vertically or horizontally

```

```
057E'  00                 CHRST   defb 00000000b           ; code 20       space
057F'  00                         defb 00000000b
0580'  00                         defb 00000000b
0581'  00                         defb 00000000b
0582'  00                         defb 00000000b
0583'  00                         defb 00000000b
0584'  00                         defb 00000000b
0585'  00                         defb 00000000b

0586'  00                         defb 00000000b           ; code 21       !
0587'  10                         defb 00010000b
0588'  10                         defb 00010000b
0589'  10                         defb 00010000b
058A'  10                         defb 00010000b
058B'  00                         defb 00000000b
058C'  10                         defb 00010000b
058D'  00                         defb 00000000b

058E'  00                         defb 00000000b           ; code 22       "
058F'  48                         defb 01001000b
0590'  48                         defb 01001000b
0591'  00                         defb 00000000b
0592'  00                         defb 00000000b
0593'  00                         defb 00000000b
0594'  00                         defb 00000000b
0595'  00                         defb 00000000b

0596'  00                         defb 00000000b           ; code 23       #
0597'  28                         defb 00101000b
0598'  7C                         defb 01111100b
0599'  28                         defb 00101000b
059A'  28                         defb 00101000b
059B'  7C                         defb 01111100b
059C'  28                         defb 00101000b
059D'  00                         defb 00000000b

059E'  00                         defb 00000000b           ; code 24       $
059F'  10                         defb 00010000b
05A0'  7C                         defb 01111100b
05A1'  50                         defb 01010000b
05A2'  7C                         defb 01111100b
05A3'  14                         defb 00010100b
05A4'  7C                         defb 01111100b
05A5'  10                         defb 00010000b

05A6'  00                         defb 00000000b           ; code 25       %
05A7'  64                         defb 01100100b
05A8'  68                         defb 01101000b
05A9'  10                         defb 00010000b
05AA'  10                         defb 00010000b
05AB'  2C                         defb 00101100b
05AC'  4C                         defb 01001100b
```

```
    05AD'  00              1180           defb 00000000b
                           1181
    05AE'  00              1182           defb 00000000b          ; code 26       &
    05AF'  10              1183           defb 00010000b
    05B0'  28              1184           defb 00101000b
    05B1'  10              1185           defb 00010000b
    05B2'  2C              1186           defb 00101100b
    05B3'  48              1187           defb 01001000b
    05B4'  34              1188           defb 00110100b
    05B5'  00              1189           defb 00000000b
                           1190
    05B6'  00              1191           defb 00000000b          ; code 27       '
    05B7'  10              1192           defb 00010000b
    05B8'  20              1193           defb 00100000b
    05B9'  00              1194           defb 00000000b
    05BA'  00              1195           defb 00000000b
    05BB'  00              1196           defb 00000000b
    05BC'  00              1197           defb 00000000b
    05BD'  00              1198           defb 00000000b
                           1199
    05BE'  00              1200           defb 00000000b          ; code 28       (
    05BF'  08              1201           defb 00001000b
    05C0'  10              1202           defb 00010000b
    05C1'  10              1203           defb 00010000b
    05C2'  10              1204           defb 00010000b
    05C3'  10              1205           defb 00010000b
    05C4'  08              1206           defb 00001000b
    05C5'  00              1207           defb 00000000b
                           1208
    05C6'  00              1209           defb 00000000b          ; code 29       )
    05C7'  20              1210           defb 00100000b
    05C8'  10              1211           defb 00010000b
    05C9'  10              1212           defb 00010000b
    05CA'  10              1213           defb 00010000b
    05CB'  10              1214           defb 00010000b
    05CC'  20              1215           defb 00100000b
    05CD'  00              1216           defb 00000000b
                           1217
    05CE'  00              1218           defb 00000000b          ; code 2A       *
    05CF'  00              1219           defb 00000000b
    05D0'  28              1220           defb 00101000b
    05D1'  10              1221           defb 00010000b
    05D2'  7C              1222           defb 01111100b
    05D3'  10              1223           defb 00010000b
    05D4'  28              1224           defb 00101000b
    05D5'  00              1225           defb 00000000b
                           1226
    05D6'  00              1227           defb 00000000b          ; code 2B       +
    05D7'  00              1228           defb 00000000b
    05D8'  10              1229           defb 00010000b
    05D9'  10              1230           defb 00010000b
    05DA'  7C              1231           defb 01111100b
```

```
    05DB'  10              1232           defb 00010000b
    05DC'  10              1233           defb 00010000b
    05DD'  00              1234           defb 00000000b
                           1235
    05DE'  00              1236           defb 00000000b          ; code 2C       ,
    05DF'  00              1237           defb 00000000b
    05E0'  00              1238           defb 00000000b
    05E1'  00              1239           defb 00000000b
    05E2'  00              1240           defb 00000000b
    05E3'  10              1241           defb 00010000b
    05E4'  10              1242           defb 00010000b
    05E5'  20              1243           defb 00100000b
                           1244
    05E6'  00              1245           defb 00000000b          ; code 2D       -
    05E7'  00              1246           defb 00000000b
    05E8'  00              1247           defb 00000000b
    05E9'  00              1248           defb 00000000b
    05EA'  7C              1249           defb 01111100b
    05EB'  00              1250           defb 00000000b
    05EC'  00              1251           defb 00000000b
    05ED'  00              1252           defb 00000000b
                           1253
    05EE'  00              1254           defb 00000000b          ; code 2E       .
    05EF'  00              1255           defb 00000000b
    05F0'  00              1256           defb 00000000b
    05F1'  00              1257           defb 00000000b
    05F2'  00              1258           defb 00000000b
    05F3'  30              1259           defb 00110000b
    05F4'  30              1260           defb 00110000b
    05F5'  00              1261           defb 00000000b
                           1262
    05F6'  00              1263           defb 00000000b          ; code 2F       /
    05F7'  00              1264           defb 00000000b
    05F8'  04              1265           defb 00000100b
    05F9'  08              1266           defb 00001000b
    05FA'  10              1267           defb 00010000b
    05FB'  20              1268           defb 00100000b
    05FC'  40              1269           defb 01000000b
    05FD'  00              1270           defb 00000000b
                           1271
    05FE'  00              1272           defb 00000000b          ; code 30       0
    05FF'  38              1273           defb 00111000b
    0600'  4C              1274           defb 01001100b
    0601'  54              1275           defb 01010100b
    0602'  54              1276           defb 01010100b
    0603'  64              1277           defb 01100100b
    0604'  38              1278           defb 00111000b
    0605'  00              1279           defb 00000000b
                           1280
    0606'  00              1281           defb 00000000b          ; code 31       1
    0607'  30              1282           defb 00110000b
    0608'  50              1283           defb 01010000b
```

```
0609'  10          defb 00010000b
060A'  10          defb 00010000b
060B'  10          defb 00010000b
060C'  7C          defb 01111100b
060D'  00          defb 00000000b

060E'  00          defb 00000000b        ; code 32      2
060F'  38          defb 00111000b
0610'  44          defb 01000100b
0611'  04          defb 00000100b
0612'  38          defb 00111000b
0613'  40          defb 01000000b
0614'  7C          defb 01111100b
0615'  00          defb 00000000b

0616'  00          defb 00000000b        ; code 33      3
0617'  38          defb 00111000b
0618'  44          defb 01000100b
0619'  18          defb 00011000b
061A'  04          defb 00000100b
061B'  44          defb 01000100b
061C'  38          defb 00111000b
061D'  00          defb 00000000b

061E'  00          defb 00000000b        ; code 34      4
061F'  08          defb 00001000b
0620'  18          defb 00011000b
0621'  28          defb 00101000b
0622'  48          defb 01001000b
0623'  7C          defb 01111100b
0624'  08          defb 00001000b
0625'  00          defb 00000000b

0626'  00          defb 00000000b        ; code 35      5
0627'  7C          defb 01111100b
0628'  40          defb 01000000b
0629'  78          defb 01111000b
062A'  04          defb 00000100b
062B'  44          defb 01000100b
062C'  38          defb 00111000b
062D'  00          defb 00000000b

062E'  00          defb 00000000b        ; code 36      6
062F'  38          defb 00111000b
0630'  40          defb 01000000b
0631'  78          defb 01111000b
0632'  44          defb 01000100b
0633'  44          defb 01000100b
0634'  38          defb 00111000b
0635'  00          defb 00000000b

0636'  00          defb 00000000b        ; code 37      7
```

```
0637'  7C          defb 01111100b
0638'  04          defb 00000100b
0639'  08          defb 00001000b
063A'  10          defb 00010000b
063B'  20          defb 00100000b
063C'  20          defb 00100000b
063D'  00          defb 00000000b

063E'  00          defb 00000000b        ; code 38      8
063F'  38          defb 00111000b
0640'  44          defb 01000100b
0641'  38          defb 00111000b
0642'  44          defb 01000100b
0643'  44          defb 01000100b
0644'  38          defb 00111000b
0645'  00          defb 00000000b

0646'  00          defb 00000000b        ; code 39      9
0647'  38          defb 00111000b
0648'  44          defb 01000100b
0649'  44          defb 01000100b
064A'  3C          defb 00111100b
064B'  04          defb 00000100b
064C'  38          defb 00111000b
064D'  00          defb 00000000b

064E'  00          defb 00000000b        ; code 3A      :
064F'  00          defb 00000000b
0650'  00          defb 00000000b
0651'  10          defb 00010000b
0652'  00          defb 00000000b
0653'  00          defb 00000000b
0654'  10          defb 00010000b
0655'  00          defb 00000000b

0656'  00          defb 00000000b        ; code 3B      ;
0657'  00          defb 00000000b
0658'  10          defb 00010000b
0659'  00          defb 00000000b
065A'  00          defb 00000000b
065B'  10          defb 00010000b
065C'  10          defb 00010000b
065D'  20          defb 00100000b

065E'  00          defb 00000000b        ; code 3C      <
065F'  00          defb 00000000b
0660'  08          defb 00001000b
0661'  10          defb 00010000b
0662'  20          defb 00100000b
0663'  10          defb 00010000b
0664'  08          defb 00001000b
0665'  00          defb 00000000b
```

```
0666'  00          defb 00000000b        ; code 3D      =
0667'  00          defb 00000000b
0668'  00          defb 00000000b
0669'  7C          defb 01111100b
066A'  00          defb 00000000b
066B'  7C          defb 01111100b
066C'  00          defb 00000000b
066D'  00          defb 00000000b

066E'  00          defb 00000000b        ; code 3E      >
066F'  00          defb 00000000b
0670'  20          defb 00100000b
0671'  10          defb 00010000b
0672'  08          defb 00001000b
0673'  10          defb 00010000b
0674'  20          defb 00100000b
0675'  00          defb 00000000b

0676'  00          defb 00000000b        ; code 3F      ?
0677'  38          defb 00111000b
0678'  44          defb 01000100b
0679'  08          defb 00001000b
067A'  10          defb 00010000b
067B'  00          defb 00000000b
067C'  10          defb 00010000b
067D'  00          defb 00000000b

067E'  00          defb 00000000b        ; code 40      @
067F'  38          defb 00111000b
0680'  44          defb 01000100b
0681'  5C          defb 01011100b
0682'  5C          defb 01011100b
0683'  40          defb 01000000b
0684'  3C          defb 00111100b
0685'  00          defb 00000000b

0686'  00          defb 00000000b        ; code 41      A
0687'  38          defb 00111000b
0688'  44          defb 01000100b
0689'  44          defb 01000100b
068A'  7C          defb 01111100b
068B'  44          defb 01000100b
068C'  44          defb 01000100b
068D'  00          defb 00000000b

068E'  00          defb 00000000b        ; code 42      B
068F'  78          defb 01111000b
0690'  44          defb 01000100b
0691'  78          defb 01111000b
0692'  44          defb 01000100b
0693'  44          defb 01000100b
```

```
0694'  78          defb 01111000b
0695'  00          defb 00000000b

0696'  00          defb 00000000b        ; code 43      C
0697'  38          defb 00111000b
0698'  44          defb 01000100b
0699'  40          defb 01000000b
069A'  40          defb 01000000b
069B'  44          defb 01000100b
069C'  38          defb 00111000b
069D'  00          defb 00000000b

069E'  00          defb 00000000b        ; code 44      D
069F'  70          defb 01110000b
06A0'  48          defb 01001000b
06A1'  44          defb 01000100b
06A2'  44          defb 01000100b
06A3'  48          defb 01001000b
06A4'  70          defb 01110000b
06A5'  00          defb 00000000b

06A6'  00          defb 00000000b        ; code 45      E
06A7'  7C          defb 01111100b
06A8'  40          defb 01000000b
06A9'  78          defb 01111000b
06AA'  40          defb 01000000b
06AB'  40          defb 01000000b
06AC'  7C          defb 01111100b
06AD'  00          defb 00000000b

06AE'  00          defb 00000000b        ; code 46      F
06AF'  7C          defb 01111100b
06B0'  40          defb 01000000b
06B1'  78          defb 01111000b
06B2'  40          defb 01000000b
06B3'  40          defb 01000000b
06B4'  40          defb 01000000b
06B5'  00          defb 00000000b

06B6'  00          defb 00000000b        ; code 47      G
06B7'  38          defb 00111000b
06B8'  44          defb 01000100b
06B9'  40          defb 01000000b
06BA'  5C          defb 01011100b
06BB'  44          defb 01000100b
06BC'  38          defb 00111000b
06BD'  00          defb 00000000b

06BE'  00          defb 00000000b        ; code 48      H
06BF'  44          defb 01000100b
06C0'  44          defb 01000100b
06C1'  7C          defb 01111100b
```

```
     06C2'  44                1492          defb 01000100b
     06C3'  44                1493          defb 01000100b
     06C4'  44                1494          defb 01000100b
     06C5'  00                1495          defb 00000000b
                              1496
     06C6'  00                1497          defb 00000000b          ; code 49      I
     06C7'  7C                1498          defb 01111100b
     06C8'  10                1499          defb 00010000b
     06C9'  10                1500          defb 00010000b
     06CA'  10                1501          defb 00010000b
     06CB'  10                1502          defb 00010000b
     06CC'  7C                1503          defb 01111100b
     06CD'  00                1504          defb 00000000b
                              1505
     06CE'  00                1506          defb 00000000b          ; code 4A      J
     06CF'  04                1507          defb 00000100b
     06D0'  04                1508          defb 00000100b
     06D1'  04                1509          defb 00000100b
     06D2'  44                1510          defb 01000100b
     06D3'  44                1511          defb 01000100b
     06D4'  3C                1512          defb 00111100b
     06D5'  00                1513          defb 00000000b
                              1514
     06D6'  00                1515          defb 00000000b          ; code 4B      K
     06D7'  48                1516          defb 01001000b
     06D8'  50                1517          defb 01010000b
     06D9'  60                1518          defb 01100000b
     06DA'  50                1519          defb 01010000b
     06DB'  48                1520          defb 01001000b
     06DC'  44                1521          defb 01000100b
     06DD'  00                1522          defb 00000000b
                              1523
     06DE'  00                1524          defb 00000000b          ; code 4C      L
     06DF'  40                1525          defb 01000000b
     06E0'  40                1526          defb 01000000b
     06E1'  40                1527          defb 01000000b
     06E2'  40                1528          defb 01000000b
     06E3'  40                1529          defb 01000000b
     06E4'  7C                1530          defb 01111100b
     06E5'  00                1531          defb 00000000b
                              1532
     06E6'  00                1533          defb 00000000b          ; code 4D      M
     06E7'  44                1534          defb 01000100b
     06E8'  6C                1535          defb 01101100b
     06E9'  54                1536          defb 01010100b
     06EA'  44                1537          defb 01000100b
     06EB'  44                1538          defb 01000100b
     06EC'  44                1539          defb 01000100b
     06ED'  00                1540          defb 00000000b
                              1541
     06EE'  00                1542          defb 00000000b          ; code 4E      N
     06EF'  44                1543          defb 01000100b
```

```
     06F0'  64                1544          defb 01100100b
     06F1'  54                1545          defb 01010100b
     06F2'  54                1546          defb 01010100b
     06F3'  4C                1547          defb 01001100b
     06F4'  44                1548          defb 01000100b
     06F5'  00                1549          defb 00000000b
                              1550
     06F6'  00                1551          defb 00000000b          ; code 4F      O
     06F7'  38                1552          defb 00111000b
     06F8'  44                1553          defb 01000100b
     06F9'  44                1554          defb 01000100b
     06FA'  44                1555          defb 01000100b
     06FB'  44                1556          defb 01000100b
     06FC'  38                1557          defb 00111000b
     06FD'  00                1558          defb 00000000b
                              1559
     06FE'  00                1560          defb 00000000b          ; code 50      P
     06FF'  78                1561          defb 01111000b
     0700'  44                1562          defb 01000100b
     0701'  44                1563          defb 01000100b
     0702'  78                1564          defb 01111000b
     0703'  40                1565          defb 01000000b
     0704'  40                1566          defb 01000000b
     0705'  00                1567          defb 00000000b
                              1568
     0706'  00                1569          defb 00000000b          ; code 51      Q
     0707'  38                1570          defb 00111000b
     0708'  44                1571          defb 01000100b
     0709'  44                1572          defb 01000100b
     070A'  44                1573          defb 01000100b
     070B'  54                1574          defb 01010100b
     070C'  38                1575          defb 00111000b
     070D'  00                1576          defb 00000000b
                              1577
     070E'  00                1578          defb 00000000b          ; code 52      R
     070F'  78                1579          defb 01111000b
     0710'  44                1580          defb 01000100b
     0711'  44                1581          defb 01000100b
     0712'  78                1582          defb 01111000b
     0713'  48                1583          defb 01001000b
     0714'  44                1584          defb 01000100b
     0715'  00                1585          defb 00000000b
                              1586
     0716'  00                1587          defb 00000000b          ; code 53      S
     0717'  38                1588          defb 00111000b
     0718'  40                1589          defb 01000000b
     0719'  38                1590          defb 00111000b
     071A'  04                1591          defb 00000100b
     071B'  44                1592          defb 01000100b
     071C'  38                1593          defb 00111000b
     071D'  00                1594          defb 00000000b
                              1595
```

```
    071E'  00             1596          defb 00000000b          ; code 54        T
    071F'  7C             1597          defb 01111100b
    0720'  10             1598          defb 00010000b
    0721'  10             1599          defb 00010000b
    0722'  10             1600          defb 00010000b
    0723'  10             1601          defb 00010000b
    0724'  10             1602          defb 00010000b
    0725'  00             1603          defb 00000000b
                          1604
    0726'  00             1605          defb 00000000b          ; code 55        U
    0727'  44             1606          defb 01000100b
    0728'  44             1607          defb 01000100b
    0729'  44             1608          defb 01000100b
    072A'  44             1609          defb 01000100b
    072B'  44             1610          defb 01000100b
    072C'  38             1611          defb 00111000b
    072D'  00             1612          defb 00000000b
                          1613
    072E'  00             1614          defb 00000000b          ; code 56        V
    072F'  44             1615          defb 01000100b
    0730'  44             1616          defb 01000100b
    0731'  44             1617          defb 01000100b
    0732'  44             1618          defb 01000100b
    0733'  28             1619          defb 00101000b
    0734'  10             1620          defb 00010000b
    0735'  00             1621          defb 00000000b
                          1622
    0736'  00             1623          defb 00000000b          ; code 57        W
    0737'  44             1624          defb 01000100b
    0738'  44             1625          defb 01000100b
    0739'  44             1626          defb 01000100b
    073A'  54             1627          defb 01010100b
    073B'  54             1628          defb 01010100b
    073C'  28             1629          defb 00101000b
    073D'  00             1630          defb 00000000b
                          1631
    073E'  00             1632          defb 00000000b          ; code 58        X
    073F'  44             1633          defb 01000100b
    0740'  28             1634          defb 00101000b
    0741'  10             1635          defb 00010000b
    0742'  10             1636          defb 00010000b
    0743'  28             1637          defb 00101000b
    0744'  44             1638          defb 01000100b
    0745'  00             1639          defb 00000000b
                          1640
    0746'  00             1641          defb 00000000b          ; code 59        Y
    0747'  44             1642          defb 01000100b
    0748'  44             1643          defb 01000100b
    0749'  28             1644          defb 00101000b
    074A'  10             1645          defb 00010000b
    074B'  10             1646          defb 00010000b
    074C'  10             1647          defb 00010000b
```

```
    074D'  00             1648          defb 00000000b
                          1649
    074E'  00             1650          defb 00000000b          ; code 5A        Z
    074F'  7C             1651          defb 01111100b
    0750'  04             1652          defb 00000100b
    0751'  08             1653          defb 00001000b
    0752'  10             1654          defb 00010000b
    0753'  20             1655          defb 00100000b
    0754'  7C             1656          defb 01111100b
    0755'  00             1657          defb 00000000b
                          1658
    0756'  00             1659          defb 00000000b          ; code 5B        [
    0757'  38             1660          defb 00111000b
    0758'  20             1661          defb 00100000b
    0759'  20             1662          defb 00100000b
    075A'  20             1663          defb 00100000b
    075B'  20             1664          defb 00100000b
    075C'  38             1665          defb 00111000b
    075D'  00             1666          defb 00000000b
                          1667
    075E'  00             1668          defb 00000000b          ; code 5C        \
    075F'  00             1669          defb 00000000b
    0760'  40             1670          defb 01000000b
    0761'  20             1671          defb 00100000b
    0762'  10             1672          defb 00010000b
    0763'  08             1673          defb 00001000b
    0764'  04             1674          defb 00000100b
    0765'  00             1675          defb 00000000b
                          1676
    0766'  00             1677          defb 00000000b          ; code 5D        ]
    0767'  70             1678          defb 01110000b
    0768'  10             1679          defb 00010000b
    0769'  10             1680          defb 00010000b
    076A'  10             1681          defb 00010000b
    076B'  10             1682          defb 00010000b
    076C'  70             1683          defb 01110000b
    076D'  00             1684          defb 00000000b
                          1685
    076E'  00             1686          defb 00000000b          ; code 5E        ^
    076F'  10             1687          defb 00010000b
    0770'  38             1688          defb 00111000b
    0771'  54             1689          defb 01010100b
    0772'  10             1690          defb 00010000b
    0773'  10             1691          defb 00010000b
    0774'  10             1692          defb 00010000b
    0775'  00             1693          defb 00000000b
                          1694
    0776'  00             1695          defb 00000000b          ; code 5F        _
    0777'  00             1696          defb 00000000b
    0778'  00             1697          defb 00000000b
    0779'  00             1698          defb 00000000b
    077A'  00             1699          defb 00000000b
    077B'  00                 1700          defb 00000000b
    077C'  00                 1701          defb 00000000b
    077D'  FC                 1702          defb 11111100b
                              1703
    077E'  00                 1704          defb 00000000b          ; code 60        pound sign
    077F'  18                 1705          defb 00011000b
    0780'  24                 1706          defb 00100100b
    0781'  70                 1707          defb 01110000b
    0782'  20                 1708          defb 00100000b
    0783'  20                 1709          defb 00100000b
    0784'  7C                 1710          defb 01111100b
    0785'  00                 1711          defb 00000000b
                              1712
    0786'  00                 1713          defb 00000000b          ; code 61        a
    0787'  00                 1714          defb 00000000b
    0788'  38                 1715          defb 00111000b
    0789'  04                 1716          defb 00000100b
    078A'  3C                 1717          defb 00111100b
    078B'  44                 1718          defb 01000100b
    078C'  3C                 1719          defb 00111100b
    078D'  00                 1720          defb 00000000b
                              1721
    078E'  00                 1722          defb 00000000b          ; code 62        b
    078F'  20                 1723          defb 00100000b
    0790'  20                 1724          defb 00100000b
    0791'  38                 1725          defb 00111000b
    0792'  24                 1726          defb 00100100b
    0793'  24                 1727          defb 00100100b
    0794'  38                 1728          defb 00111000b
    0795'  00                 1729          defb 00000000b
                              1730
    0796'  00                 1731          defb 00000000b          ; code 63        c
    0797'  00                 1732          defb 00000000b
    0798'  1C                 1733          defb 00011100b
    0799'  20                 1734          defb 00100000b
    079A'  20                 1735          defb 00100000b
    079B'  20                 1736          defb 00100000b
    079C'  1C                 1737          defb 00011100b
    079D'  00                 1738          defb 00000000b
                              1739
    079E'  00                 1740          defb 00000000b          ; code 64        d
    079F'  08                 1741          defb 00001000b
    07A0'  08                 1742          defb 00001000b
    07A1'  38                 1743          defb 00111000b
    07A2'  48                 1744          defb 01001000b
    07A3'  48                 1745          defb 01001000b
    07A4'  38                 1746          defb 00111000b
    07A5'  00                 1747          defb 00000000b
                              1748
    07A6'  00                 1749          defb 00000000b          ; code 65        e
    07A7'  00                 1750          defb 00000000b
    07A8'  38                 1751          defb 00111000b
```

```
    07A9'  44                 1752          defb 01000100b
    07AA'  78                 1753          defb 01111000b
    07AB'  40                 1754          defb 01000000b
    07AC'  3C                 1755          defb 00111100b
    07AD'  00                 1756          defb 00000000b
                              1757
    07AE'  00                 1758          defb 00000000b          ; code 66        f
    07AF'  10                 1759          defb 00010000b
    07B0'  28                 1760          defb 00101000b
    07B1'  70                 1761          defb 01110000b
    07B2'  20                 1762          defb 00100000b
    07B3'  20                 1763          defb 00100000b
    07B4'  20                 1764          defb 00100000b
    07B5'  00                 1765          defb 00000000b
                              1766
    07B6'  00                 1767          defb 00000000b          ; code 67        g
    07B7'  00                 1768          defb 00000000b
    07B8'  38                 1769          defb 00111000b
    07B9'  48                 1770          defb 01001000b
    07BA'  48                 1771          defb 01001000b
    07BB'  38                 1772          defb 00111000b
    07BC'  08                 1773          defb 00001000b
    07BD'  30                 1774          defb 00110000b
                              1775
    07BE'  00                 1776          defb 00000000b          ; code 68        h
    07BF'  40                 1777          defb 01000000b
    07C0'  40                 1778          defb 01000000b
    07C1'  70                 1779          defb 01110000b
    07C2'  48                 1780          defb 01001000b
    07C3'  48                 1781          defb 01001000b
    07C4'  48                 1782          defb 01001000b
    07C5'  00                 1783          defb 00000000b
                              1784
    07C6'  00                 1785          defb 00000000b          ; code 69        i
    07C7'  10                 1786          defb 00010000b
    07C8'  00                 1787          defb 00000000b
    07C9'  30                 1788          defb 00110000b
    07CA'  10                 1789          defb 00010000b
    07CB'  10                 1790          defb 00010000b
    07CC'  38                 1791          defb 00111000b
    07CD'  00                 1792          defb 00000000b
                              1793
    07CE'  00                 1794          defb 00000000b          ; code 6A        j
    07CF'  08                 1795          defb 00001000b
    07D0'  00                 1796          defb 00000000b
    07D1'  08                 1797          defb 00001000b
    07D2'  08                 1798          defb 00001000b
    07D3'  08                 1799          defb 00001000b
    07D4'  48                 1800          defb 01001000b
    07D5'  30                 1801          defb 00110000b
                              1802
    07D6'  00                 1803          defb 00000000b          ; code 6B        k
```

```
07D7'  20              1804          defb 00100000b
07D8'  28              1805          defb 00101000b
07D9'  30              1806          defb 00110000b
07DA'  30              1807          defb 00110000b
07DB'  28              1808          defb 00101000b
07DC'  24              1809          defb 00100100b
07DD'  00              1810          defb 00000000b
                       1811
07DE'  00              1812          defb 00000000b          ; code 6C      l
07DF'  20              1813          defb 00100000b
07E0'  20              1814          defb 00100000b
07E1'  20              1815          defb 00100000b
07E2'  20              1816          defb 00100000b
07E3'  20              1817          defb 00100000b
07E4'  18              1818          defb 00011000b
07E5'  00              1819          defb 00000000b
                       1820
07E6'  00              1821          defb 00000000b          ; code 6D      m
07E7'  00              1822          defb 00000000b
07E8'  28              1823          defb 00101000b
07E9'  54              1824          defb 01010100b
07EA'  54              1825          defb 01010100b
07EB'  54              1826          defb 01010100b
07EC'  54              1827          defb 01010100b
07ED'  00              1828          defb 00000000b
                       1829
07EE'  00              1830          defb 00000000b          ; code 6E      n
07EF'  00              1831          defb 00000000b
07F0'  70              1832          defb 01110000b
07F1'  48              1833          defb 01001000b
07F2'  48              1834          defb 01001000b
07F3'  48              1835          defb 01001000b
07F4'  48              1836          defb 01001000b
07F5'  00              1837          defb 00000000b
                       1838
07F6'  00              1839          defb 00000000b          ; code 6F      o
07F7'  00              1840          defb 00000000b
07F8'  38              1841          defb 00111000b
07F9'  44              1842          defb 01000100b
07FA'  44              1843          defb 01000100b
07FB'  44              1844          defb 01000100b
07FC'  38              1845          defb 00111000b
07FD'  00              1846          defb 00000000b
                       1847
07FE'  00              1848          defb 00000000b          ; code 70      p
07FF'  00              1849          defb 00000000b
0800'  70              1850          defb 01110000b
0801'  48              1851          defb 01001000b
0802'  48              1852          defb 01001000b
0803'  70              1853          defb 01110000b
0804'  40              1854          defb 01000000b
0805'  40              1855          defb 01000000b
```

```
                       1856
0806'  00              1857          defb 00000000b          ; code 71      q
0807'  00              1858          defb 00000000b
0808'  38              1859          defb 00111000b
0809'  48              1860          defb 01001000b
080A'  48              1861          defb 01001000b
080B'  38              1862          defb 00111000b
080C'  08              1863          defb 00001000b
080D'  0C              1864          defb 00001100b
                       1865
080E'  00              1866          defb 00000000b          ; code 72      r
080F'  00              1867          defb 00000000b
0810'  18              1868          defb 00011000b
0811'  20              1869          defb 00100000b
0812'  20              1870          defb 00100000b
0813'  20              1871          defb 00100000b
0814'  20              1872          defb 00100000b
0815'  00              1873          defb 00000000b
                       1874
0816'  00              1875          defb 00000000b          ; code 73      s
0817'  00              1876          defb 00000000b
0818'  30              1877          defb 00110000b
0819'  40              1878          defb 01000000b
081A'  30              1879          defb 00110000b
081B'  08              1880          defb 00001000b
081C'  70              1881          defb 01110000b
081D'  00              1882          defb 00000000b
                       1883
081E'  00              1884          defb 00000000b          ; code 74      t
081F'  20              1885          defb 00100000b
0820'  70              1886          defb 01110000b
0821'  20              1887          defb 00100000b
0822'  20              1888          defb 00100000b
0823'  20              1889          defb 00100000b
0824'  18              1890          defb 00011000b
0825'  00              1891          defb 00000000b
                       1892
0826'  00              1893          defb 00000000b          ; code 75      u
0827'  00              1894          defb 00000000b
0828'  48              1895          defb 01001000b
0829'  48              1896          defb 01001000b
082A'  48              1897          defb 01001000b
082B'  48              1898          defb 01001000b
082C'  30              1899          defb 00110000b
082D'  00              1900          defb 00000000b
                       1901
082E'  00              1902          defb 00000000b          ; code 76      v
082F'  00              1903          defb 00000000b
0830'  44              1904          defb 01000100b
0831'  44              1905          defb 01000100b
0832'  28              1906          defb 00101000b
0833'  28              1907          defb 00101000b
```

```
    0834'  10                1908             defb 00010000b
    0835'  00                1909             defb 00000000b
                             1910
    0836'  00                1911             defb 00000000b          ! code 77       w
    0837'  00                1912             defb 00000000b
    0838'  44                1913             defb 01000100b
    0839'  54                1914             defb 01010100b
    083A'  54                1915             defb 01010100b
    083B'  54                1916             defb 01010100b
    083C'  28                1917             defb 00101000b
    083D'  00                1918             defb 00000000b
                             1919
    083E'  00                1920             defb 00000000b          ! code 78       x
    083F'  00                1921             defb 00000000b
    0840'  44                1922             defb 01000100b
    0841'  28                1923             defb 00101000b
    0842'  10                1924             defb 00010000b
    0843'  28                1925             defb 00101000b
    0844'  44                1926             defb 01000100b
    0845'  00                1927             defb 00000000b
                             1928
    0846'  00                1929             defb 00000000b          ! code 79       y
    0847'  00                1930             defb 00000000b
    0848'  48                1931             defb 01001000b
    0849'  48                1932             defb 01001000b
    084A'  48                1933             defb 01001000b
    084B'  38                1934             defb 00111000b
    084C'  08                1935             defb 00001000b
    084D'  70                1936             defb 01110000b
                             1937
    084E'  00                1938             defb 00000000b          ! code 7A       z
    084F'  00                1939             defb 00000000b
    0850'  7C                1940             defb 01111100b
    0851'  08                1941             defb 00001000b
    0852'  10                1942             defb 00010000b
    0853'  20                1943             defb 00100000b
    0854'  7C                1944             defb 01111100b
    0855'  00                1945             defb 00000000b
                             1946
    0856'  00                1947             defb 00000000b          ! code 7B       {
    0857'  1C                1948             defb 00011100b
    0858'  10                1949             defb 00010000b
    0859'  60                1950             defb 01100000b
    085A'  10                1951             defb 00010000b
    085B'  10                1952             defb 00010000b
    085C'  1C                1953             defb 00011100b
    085D'  00                1954             defb 00000000b
                             1955
    085E'  00                1956             defb 00000000b          ! code 7C       |
    085F'  10                1957             defb 00010000b
    0860'  10                1958             defb 00010000b
    0861'  10                1959             defb 00010000b
```

```
    0862'  10                1960             defb 00010000b
    0863'  10                1961             defb 00010000b
    0864'  10                1962             defb 00010000b
    0865'  00                1963             defb 00000000b
                             1964
    0866'  00                1965             defb 00000000b          ! code 7D       }
    0867'  70                1966             defb 01110000b
    0868'  10                1967             defb 00010000b
    0869'  08                1968             defb 00001000b
    086A'  10                1969             defb 00010000b
    086B'  10                1970             defb 00010000b
    086C'  70                1971             defb 01110000b
    086D'  00                1972             defb 00000000b
                             1973
    086E'  00                1974             defb 00000000b          ! code 7E       ~
    086F'  28                1975             defb 00101000b
    0870'  50                1976             defb 01010000b
    0871'  00                1977             defb 00000000b
    0872'  00                1978             defb 00000000b
    0873'  00                1979             defb 00000000b
    0874'  00                1980             defb 00000000b
    0875'  00                1981             defb 00000000b
                             1982
    0876'  78                1983             defb 01111000b          ! code 7F       COPYRIGHT
    0877'  84                1984             defb 10000100b
    0878'  94                1985             defb 10010100b
    0879'  A4                1986             defb 10100100b
    087A'  A4                1987             defb 10100100b
    087B'  94                1988             defb 10010100b
    087C'  84                1989             defb 10000100b
    087D'  78                1990             defb 01111000b
                             1991
    087E'  00                1992    GRPST    defb 00000000b          ! code 80       graphics space
    087F'  00                1993             defb 00000000b
    0880'  00                1994             defb 00000000b
    0881'  00                1995             defb 00000000b
    0882'  00                1996             defb 00000000b
    0883'  00                1997             defb 00000000b
    0884'  00                1998             defb 00000000b
    0885'  00                1999             defb 00000000b
                             2000    !
    0886'  1C                2001             defb 00011100b          ! code 81       graphics
    0887'  1C                2002             defb 00011100b
    0888'  1C                2003             defb 00011100b
    0889'  1C                2004             defb 00011100b
    088A'  00                2005             defb 00000000b
    088B'  00                2006             defb 00000000b
    088C'  00                2007             defb 00000000b
    088D'  00                2008             defb 00000000b
                             2009    !
                             2010
    088E'  E0                2011             defb 11100000b          ! code 82       graphics
```

```
     088F'  E0                    2012          defb 11100000b
     0890'  E0                    2013          defb 11100000b
     0891'  E0                    2014          defb 11100000b
     0892'  00                    2015          defb 00000000b
     0893'  00                    2016          defb 00000000b
     0894'  00                    2017          defb 00000000b
     0895'  00                    2018          defb 00000000b
                                  2019
     0896'  FC                    2020          defb 11111100b          ; code 83       graphics
     0897'  FC                    2021          defb 11111100b
     0898'  FC                    2022          defb 11111100b
     0899'  FC                    2023          defb 11111100b
     089A'  00                    2024          defb 00000000b
     089B'  00                    2025          defb 00000000b
     089C'  00                    2026          defb 00000000b
     089D'  00                    2027          defb 00000000b
                                  2028
                                  2029   ;
     089E'  00                    2030          defb 00000000b          ; code 84       graphics
     089F'  00                    2031          defb 00000000b
     08A0'  00                    2032          defb 00000000b
     08A1'  00                    2033          defb 00000000b
     08A2'  1C                    2034          defb 00011100b
     08A3'  1C                    2035          defb 00011100b
     08A4'  1C                    2036          defb 00011100b
     08A5'  1C                    2037          defb 00011100b
                                  2038   ;
     08A6'  1C                    2039          defb 00011100b          ; code 85       graphics
     08A7'  1C                    2040          defb 00011100b
     08A8'  1C                    2041          defb 00011100b
     08A9'  1C                    2042          defb 00011100b
     08AA'  1C                    2043          defb 00011100b
     08AB'  1C                    2044          defb 00011100b
     08AC'  1C                    2045          defb 00011100b
     08AD'  1C                    2046          defb 00011100b
                                  2047
                                  2048
     08AE'  E0                    2049          defb 11100000b          ; code 86        graphics
     08AF'  E0                    2050          defb 11100000b
     08B0'  E0                    2051          defb 11100000b
     08B1'  E0                    2052          defb 11100000b
     08B2'  1C                    2053          defb 00011100b
     08B3'  1C                    2054          defb 00011100b
     08B4'  1C                    2055          defb 00011100b
     08B5'  1C                    2056          defb 00011100b
                                  2057   ;
     08B6'  FC                    2058          defb 11111100b          ;code 87        graphics
     08B7'  FC                    2059          defb 11111100b
     08B8'  FC                    2060          defb 11111100b
     08B9'  FC                    2061          defb 11111100b
     08BA'  1C                    2062          defb 00011100b
     08BB'  1C                    2063          defb 00011100b
```

```
     08BC'  1C                    2064          defb 00011100b
     08BD'  1C                    2065          defb 00011100b
                                  2066   ;
     08BE'  00                    2067          defb 00000000b          ; code 88       graphics
     08BF'  00                    2068          defb 00000000b
     08C0'  00                    2069          defb 00000000b
     08C1'  00                    2070          defb 00000000b
     08C2'  E0                    2071          defb 11100000b
     08C3'  E0                    2072          defb 11100000b
     08C4'  E0                    2073          defb 11100000b
     08C5'  E0                    2074          defb 11100000b
                                  2075   ;
     08C6'  1C                    2076          defb 00011100b          ; code 89        graphics
     08C7'  1C                    2077          defb 00011100b
     08C8'  1C                    2078          defb 00011100b
     08C9'  1C                    2079          defb 00011100b
     08CA'  E0                    2080          defb 11100000b
     08CB'  E0                    2081          defb 11100000b
     08CC'  E0                    2082          defb 11100000b
     08CD'  E0                    2083          defb 11100000b
                                  2084   ;
     08CE'  E0                    2085          defb 11100000b          ; code 8A       graphics
     08CF'  E0                    2086          defb 11100000b
     08D0'  E0                    2087          defb 11100000b
     08D1'  E0                    2088          defb 11100000b
     08D2'  E0                    2089          defb 11100000b
     08D3'  E0                    2090          defb 11100000b
     08D4'  E0                    2091          defb 11100000b
     08D5'  E0                    2092          defb 11100000b
                                  2093   ;
     08D6'  FC                    2094          defb 11111100b          ; code 8B       graphics
     08D7'  FC                    2095          defb 11111100b
     08D8'  FC                    2096          defb 11111100b
     08D9'  FC                    2097          defb 11111100b
     08DA'  E0                    2098          defb 11100000b
     08DB'  E0                    2099          defb 11100000b
     08DC'  E0                    2100          defb 11100000b
     08DD'  E0                    2101          defb 11100000b
                                  2102   ;
     08DE'  00                    2103          defb 00000000b          ; code 8C       graphics
     08DF'  00                    2104          defb 00000000b
     08E0'  00                    2105          defb 00000000b
     08E1'  00                    2106          defb 00000000b
     08E2'  FC                    2107          defb 11111100b
     08E3'  FC                    2108          defb 11111100b
     08E4'  FC                    2109          defb 11111100b
     08E5'  FC                    2110          defb 11111100b
                                  2111   ;
     08E6'  1C                    2112          defb 00011100b          ; code 8D       graphics
     08E7'  1C                    2113          defb 00011100b
     08E8'  1C                    2114          defb 00011100b
     08E9'  1C                    2115          defb 00011100b
```

```
ADL - ASC 002 80-COL.MODE SUPPORT        CRZ80/11 version 10.36.14        16-Mar-84  12:37:6        Page 13-23
CHAR.SET FOR 40/80 COL.MODES   CHST80.SRC

     08EA'  FC                  2116            defb 11111100b
     08EB'  FC                  2117            defb 11111100b
     08EC'  FC                  2118            defb 11111100b
     08ED'  FC                  2119            defb 11111100b
                                2120    ;
     08EE'  E0                  2121            defb 11100000b             ;code 8E         graphics
     08EF'  E0                  2122            defb 11100000b
     08F0'  E0                  2123            defb 11100000b
     08F1'  E0                  2124            defb 11100000b
     08F2'  FC                  2125            defb 11111100b
     08F3'  FC                  2126            defb 11111100b
     08F4'  FC                  2127            defb 11111100b
     08F5'  FC                  2128            defb 11111100b
                                2129    ;
     08F6'  FC                  2130            defb 11111100b             ;code 8F         graphics
     08F7'  FC                  2131            defb 11111100b
     08F8'  FC                  2132            defb 11111100b
     08F9'  FC                  2133            defb 11111100b
     08FA'  'C                  2134            defb 11111100b
     08FB'  FC                  2135            defb 11111100b
     08FC'  FC                  2136            defb 11111100b
     08FD'  FC                  2137            defb 11111100b
                                2138        END
Additional input after END statement ignored
```

```
ADL - ASC 002 80-COL.MODE SUPPORT        CRZ80/11 version 10.36.14        16-Mar-84  12:37:6        Page S-1
CHAR.SET FOR 40/80 COL.MODES   CHST80.SRC

A         Reserved         ATTBYT    0039             ATTCTL    0011             B         Reserved         BOTLN     002D
C         Reserved         CALCPO    053C             CALCP1    0526             CALCP2    053A             CHNGVI    0E8E
CHRSET    047E             CHRST     057E             CHTBL     002F             CLINIT    1800             CLRCTL    000C
CLRS80    0278             CLRSCB    000E IN          CLRSCN    027C IN          CLRSC0    0292             CLRSC1    02A3
CLRSC2    02AE             CLRSC3    02B2             CLRSC4    02B5             CLRSC5    02C0             CLRSC6    02D5
CLRSC7    02E8             CLRSXT    02E7             CONVFM    04FC             COORDS    5C7D             CURPOS    0034
D         Reserved         DATAB     0000             DEST7     F7C0             DFADRS    0036             DFBIT     003E
DKHSPT    00F6             DRIVES    6840             E         Reserved         ENBLEX    0402             ENBLHC    040F
ERRRET    0144             EXTNRM    04A7             FIX       97C0             FIXTBL    1000             GETAB0    03CD
GETATB    001E IN          GETATT    03CD IN          GETC80    03D4             GETCTL    0019             GETCUB    0021 IN
GETCUR    03D4 IN          GETC1     03EC             GETVAL    04AC             GOODRE    0142             GRBLK     0240
GRPHST    077E             GRPST     087E             GRTBL     0031             GTCHAR    032A IN          GTCH80    0326
GTCHRB    0018 IN          GTCH1     033F             GTCH2     0343             GTCH22    0349             GTCH23    035F
GTCH3     0364             GTCH31    0367             GTCH32    0391             GTCH4     039A             GTCH5     0386
GTCH6     03C6             GTCSHF    0575             GTC2BC    0560             GTC2B1    0568             GTC2B2    057C
GTINDX    003A             H         Reserved         HREXPT    00FF             INSDBL    0201             INSERT    12C0
INVPAR    0147             L         Reserved         LDPOSN    0558             LINCOL    0007             LINLEN    0033
LNSU      053F             LOOP      0205             LOOP0     0208             LOOP1     0210             M         Reserved
MARGIN    0030             MASKB     0038             MOVESZ    0840             MSKCTL    0015             NEXT1     00C2
NEXT2     00EA             NEXT3     010A             NOINVE    0117             NORR1     00C9             NORR2     00F1
NORR3     0111             NOSTRG    0186             NOXOR     00CF             NXTSC     0226             PARAMS    5CC3
PARERR    04F0             PRAMT     5C84             PSW       Reserved         RAMTOP    5C82             RECLEN    1720
SCINIT    1701             SCRCTL    0028             SCRLS     002A IN          SCRL80    01CA             SCRLCT    002E
SCRLXT    0237             SCRLO     01E4             SCROLL    01CE IN          SCRSZ     0018             SETAB0    02F3
SETATB    0012 IN          SETATT    02F6 IN          SETC80    018A             SETCUB    0009 IN          SETCUR    018E IN
SETM80    031D             SETMOB    0025 IN          SETMD1    0446             SETMD2    046A             SETMOD    03F4 IN
SETMSB    0016 IN          SETMSK    0320 IN          SETO      04CF             SP        Reserved         STBLK     0248
STBLK0    024C             STBLK1    024D             STBLK2    0264             STKEND    5C65             STMD80    03F1
STPOSN    0550             STRGCT    003B             SXT4      0483             TESTAD    01F3             TSTPAR    04E8
TSTPR1    04F4             TST01     04C7             TVFULQ    0148             TVFUL1    0167             UDG       5C7B
UPDATE    047E             UPDPOS    0507             VARS      5C4B             VIDMOD    5CC2             VIMODE    0024
WRCHAR    0042 IN          WRCHRB    0001 IN          WRCHXT    013F             WRCH0     003F             WRCH11    0061
WRCH12    0069             WRCH13    006D             WRCH14    0083             WRCH15    0084             WRCH2     008A
WRCH3     0095             WRCH5     0098             WRCH6     00AF             WRCH7     0124             WRSTRB    0004 IN
WRSTRG    0194 IN          WRSTR0    0171             WRSTR1    017C             WRSTR2    018C             WRSTR3    019E
WRSTX1    01A7             WRSTX2    0183

     No errors detected
```

```
Cross reference listing (MREF version 4.7)

Symbol    Refs (# = definition  $ = write  <blank> = read)

ATTBYT    134#    672$    903     906$
ATTCTL     89#    648     907$
BOTLN     118#    322     844$
CALCP1   1042    1048#
CALCP2   1059    1062#
CALCP0    698    1023    1031#
CHNGVI     42#    892
CHRSET     39#    126     857
CHRST      39    1128#
CHTBL     126#    170     699     858$
CLINIT     38#    851
CLRCTL     84#    555     852$
CLRSB0     87     554#
CLRSCU    507     567     571#
CLRSC1    583#    632
CLRSC2    592#
CLRSC3    595#    641
CLRSC4    597#    626
CLRSC5    606#    620
CLRSC6    617     621#
CLRSC7    591     635#
CLRSCB     30      87#
CLRSCN     27     557#
CLRSXT    630     633#
CONVFM    415     697     811    1010#
COORDS     51#    913$
CURPOS    129#    810    1084$   1089
DATAB      76#    147     864$
DEST7      59#     60
DPADRS    131#   1085$   1090
DPBIT     141#    224     240     269     299     301$    304$
                  695     760$    790$   1063$   1107
DKHSPT     46#    973$    979$
DRIVES     56#     57      58
ENBLEX    887     968#
ENBLMD    893     977#
ERPRET    313#    317     334     917
EXTNRM    882     886     916#
FIX        60#
FIXTBL     62#
```

```
Cross reference listing (MREF version 4.7)

Symbol    Refs (# = definition  $ = write  <blank> = read)

GETAB0    105     801#
GETATB     31     105#
GETATT     28     903#
GETC1     814     920     822#
GETCB0    106     808#
GETCTL    102#    691     868$    869$
GETCUB     31     106#
GETCUR     28     809#
GETVAL    889     938#
GOODRE    312#    417     439     568     673     682     876
                  898     915
GRBLK     461     509#
GRPHST     40#    127     859
GRPST      40    1992#
GRTBL     127#    167     776     860$
GTC2B1   1104    1106#
GTC2B2   1110    1115#
GTC2BC    707     732    1098#
GTCH1     702#    779     786
GTCH2     704#    771
GTCH22    709#
GTCH23    720     723#
GTCH3     716     726#
GTCH31    728#    743
GTCH32    753     755     757#
GTCH4     722     725     742     764#
GTCH5     775     780#
GTCH6     781     789#
GTCHAR     28     693#
GTCHB0    104     688#
GTCHRB     31     104#
GTCSMF   1111#   1114
GTINDX    136#    702$    718     750     773
HREXPT     45#    663     666$    969     971$    980     982$
INSDBL    462#
INSERT     57#    877
INVPAR    155     157     31[illegible]     432     435     437     561
                  564     566     655     838     993
LDPOSN    150    1088#
LINCOL     80#    411     922$    865$    866$
```

```
Cross reference listing (MREF version 4.7)

Symbol    Refs (# = definition  $ = write  <blank> = read)

LIMLEN    128#      182      445      575      812      848$     908
                    994      1010     1032
LNBU      448       578      1031     1067#
LOOP      465#      515
LOOP0     467#      494
LOOP1     474#      488
MARGIN    140#      950$     1051
MASKB     132#      196       681$     854$
MOVESZ     58#       59      878
MSKCTL     98#      678       867$
NEXT1     230#      233
NEXT2     256#      259
NEXT3     275#      278
NOINVE    268       285#
NORR1     228       234#
NORR2     254       260#
NORR3     273       279#
NOSTRG    353       4(1#
NOXOR     223       240#
NXTSC     485       489#
PARAMS     55#      346
PARERR    992#      997
PRAMT      53#
RAMTOP     52#      883
RECLEN     43#      357
SCINIT     37#      841
SCRCTL    111#      336      425      842$
SCRL0     338       438      441#
SCRLB      30       114#
SCRLB0    114       423#
SCRLCT    123#      326      330$     335$     846$
SCRLXT    498       501#     544
SCROLL     27       427#
SCRSZ      36#      319      442      572      1014     1069
SET0      942       961#
SETAB0     97       647#
SETATB     30        97#
SETATT     27       650#
SETCB0     83       409#
SETCUB     30        83#
```

```
Cross reference listing (MREF version 4.7)

Symbol    Refs (# = definition  $ = write  <blank> = read)

SETCUR     27       413#
SETMB0    101       677#
SETMD1    836       871#
SETMD2    874       887#
SETMDB     33       110#
SETMOD     33       833#
SETMSB     30       101#
SETMSK     27       680#
STBLK     453       517#
STBLK0    520#      540
STBLK1    521#      534
STBLK2    531       535#
STKEND     49#      880
STMDB0    110       829#
STPOSN    311      1024      1083#
STRGCT    138#      395$      855$     856$
SXT4      899#
TESTAD    451#      500       547
TST01     940       956#
TSTPAR    414       694       989#
TSTPR1    991       994#
TVFUL1    328       335#
TVFUL0    191       319#
UDG        50#      163       782
UPDATE    897#
UPDPOS    324       416       634      914      1021#
VARS       48#      350
VIDMOD     54#      653       668$     872       896$
VIMODE    107#      831
WRCH0      77       145#
WRCH11    162       167#
WRCH12    160       170#
WRCH13    166       169       171#
WRCH14    183       188#
WRCH15    187       189#
WRCH2     194#
WRCH3     199       201#
WRCH5     206#      295
WRCH6     217       219#
WRCH7     296#
WRCHAR     27       149#      377
WRCHRB     30        77#
WRCHXT    302       309       311#
WRSTR0     78       346#
WRSTR1    351#      360
WRSTR2    355       361#
WRSTR3    382#      393
WRSTRB     30        78#
WRSTRG     27       374#      388
WRSTX1    380       391#
WRSTX2    398#      402
```

APPENDIX
C-3

TIMEX COMPUTER CORPORATION

APPLICATION DEVELOPMENT LIBRARY

Application Software Component 003

40-COLUMN MODE

Date: 12/19/83

ASC Number: 003

Version: 001

Author: Carol Corcoran

Name: 40 Column Mode Support

Description:

This component provides support to the application programmer for using the 40-column mode feature of the TS 2068. 40-column mode is implemented by modifying the character width from 8 to 6 pixels. The services include position control, clear screen and scroll screen services and display of characters. For ease of use from BASIC, status is returned in the BC register pair, usually zero for successful completion and designated non-zero values for other conditions. The interface from BASIC is by means of POKE'ing the input parameters to designated RAM locations prior to invoking the service via the USR function. See page 4 of the code listing for the memory addresses to be used from BASIC with the support code loaded starting at Chunk 7 (E000H/57344).

Attribute and other display controls such as Inverse are taken from the standard TS2068 System Variables (see Usage Section.)

This component is designed to permit use in normal video mode (Display File 1 only) or, in conjunction with ASC004 - Dual Screen Mode Support, to permit use of Display File 1 and/or Display File 2. The value of the System Variable VIDMOD is used to determine which display file is the target of the requested service.

Application Services

- -

Name: INIT40 (INIT4B from BASIC)

Input: None

Description:

Initializes the internal variables to their default values for 40-column mode (see Usage Section).

- -

ASC Number: 003

Name: CLRSCN (CLRSCB from BASIC - parameters to CLSCTL)

Input: Line Count (1-24)
Starting Line Number (0-23)

From Machine Code: Line Count In Register B
Starting Line In Register C

From BASIC: Starting Line Number in CLSCTL
Line Count in CLSCTL + 1

Description:

Clears to background color (PAPER) the designated number of lines, beginning with the Starting Line Number. Line 0 with a count of 24 clears the entire screen. Upon return, the cursor position is at the beginning of the first line cleared.

Output: BC = 0 for successful completion
BC = 1 invalid parameters
(Line Number + Line Count <1 or >24)

ASC Number: 002

Name: SETCUR (SETCUB from BASIC - parameters to LINCOL)

Input: Line Number (0-23)
Column Number (0-39) or (0-41)

From Machine Code: Line Number In Register B
Column Number In Register C

From BASIC: Column Number In LINCOL
Line Number In LINCOL + 1

Description:

Converts the requested position to internal format, determines display file address, and stores the values for use by the next display character operation. Note that once established, the position is updated automatically when a character is displayed so that it is only necessary to set the position when sequential display is not desired.

Output: BC = 0 for successful completion
BC = 1 for invalid parameters (Line Number > 23 ,
Column Number > Line Length-1)

Name: WRCHR (WRCHB from BASIC - parameter to DATAB)

Input: Character code for character to be displayed

20H TO 7FH - Std. TS2068 Character Set
80H TO 8FH - Std. Graphics Set
90H TO A4H - User-Defined Graphics Set

From Machine Code: Register A

From BASIC: in DATAB

Description:

Displays character at current cursor position, applying current attributes and mask. Moves cursor position on to next sequential position. If character would start a new line after BOTLN (see Usage section) and the scroll count (variable SCRLCT) decrements to zero, the character will not be displayed and return will be made with BC = 3 (screen full). If the scroll count does not decrement to zero, the screen will be scrolled up one line using the information in SCRCTL and the new line started at the vacated line.

Note that only the first 6 bits of each byte in the User Defined Graphics area will be transferred to the display file.

Output: BC = 0 for successful completion
BC = 1 invalid character code
BC = 3 for screen full

Name: WRSTRG (WRSTRB from BASIC - String Identifier in PARAM$)

Input: Character Code String

From machine code: Address of string in HL
Count in BC

From BASIC: String Variable Identifier in
System Variable PARAM$ - 23747 (5CC3H)

Description:

Displays the characters from the string, beginning at the current cursor location and continuing sequentially until the count expires, or 'Screen Full' is detected (see WRCHR description and Usage Section on Automatic Scrolling). For the Screen Full condition, the remaining count is stored in the internal variable STRGCT for access by the user.

NOTE: Characters within the string which are outside of the supported range (32 through 164 (20H-A4H)) will be ignored. E.g., BASIC Token codes and control codes embedded in an INPUT string will not be displayed or decoded.

From BASIC, POKE the code for the string variable identifier into PARAM$ prior to invoking WRSTRB, e.g.

```
0005  LET a$="-----string------"
0010  POKE 23747,CODE "a"
0015  IF USR (WRSTRB)<>0 THEN -----
          (continue)
```

Output: BC = 0 Successful
BC = 2 BASIC - String not found
BC = 3 Screen Full - Remaining Count in STRGCT
(HL=Current Address in String)

Name: SCROLL (SCRLB from BASIC - parameters to SCRCTL)

Input: Line Count (1-23)
Starting Line Number (1-23)

From Machine Code: Line Count In B
Starting Line In C
From BASIC: Starting Line In SCRCTL
Line Count In SCRCTL + 1

Description:

Scrolls the designated number of lines up 1 position, starting at the specified line number and inserts a blank line at the bottom of the scrolled area. Line 1 with a count of 23 will scroll the entire screen up 1 line. Upon return, the cursor position is at the beginning of the inserted blank line.

Note: See Usage Section on 'automatic' scrolling.

Output: BC = 0 Successful
BC = 1 Invalid Parameters
(Line Number + Line Count < 1 or > 24)

Name: GTCHAR (GTCHRB from BASIC - parameters to GETCTL)

Input: Line/Column position as for SETCUR

From Machine Code: Line Number in B
Column Number in C

From BASIC: Column Number in GETCTL
Line Number in GETCTL + 1

Description:

Returns in register C of the BC register pair the character code for the character at the designated screen position. If no match against the character set (including the standard and user-defined graphics) is found, zero is returned. (Character code or zero also returned in A.)

Note: Positions 'printed' using the OVER technique will return zero if they do not match against any single character.

Output: BC = 0 for no find
BC = 1 invalid parameters
BC = character code (20H-A4H)

Name: GETATT (GETATB from BASIC - parameters to GETCTL)

Input: As for GTCHAR

Description:

Returns in register C of the BC register pair the attribute byte for the character at the designated screen position. Note that in 40 column mode the 6-pixel character width may cross attribute byte boundaries in the display file (e.g. the character may have 2 pixels in one byte and 4 in the next). The attribute bytes for these two locations may be different. The value of the attribute byte controlling the starting location of the character will be returned.

```
Output:  BC = 1 for invalid parameters
         BC = attribute byte
                                 Bit 7 - FLASH
                                 Bit 6 - BRIGHT
                                 Bit 5
                                 Bit 4 - PAPER
                                 Bit 3 /
                                 Bit 2
                                 Bit 1 - INK
                                 Bit 0 /
```

Name: GETCUR (GETCUB from BASIC)

Input: None

Description:

Returns in the BC register pair and in the BASIC parameter location LINCOL, the current print position (where the next character would be displayed).

```
Output:  B = Line number (0-23)
         C = Column number (0-39) or (0-41)

 BASIC:  LINCOL  -  Column number
         LINCOL + 1  -  Line number
```

NOTE: If the last character was printed at Col.39 (41) of Line 23 (last position on the screen), then Col.0/Line 23 will be returned.

Usage:

Memory Usage:

This package of machine code routines includes the following internal variables:

Name	Size	Description
SCRCTL	2	Scroll Control LSB = Starting line number MSB = Number of lines to be scrolled
BOTLN	1	Bottom Line - Line number (0-23) after which test for scroll will be made.
SCRLCT	1	Scroll Count- Number of times + 1 that automatic scroll will be done. When decremented to zero, data will not be displayed and a condition code will be returned to user.
CHTBL	2	Character Table (Base Address-100H)
GRTBL	2	Std.Graphics Character Table (Base-100H)
LINLEN	1	Line Length - (40 or 42 when in 40-Col.Mode)
CURPOS	2	Current Position (Internal Format) LSB = Column Position MSB = Line Position
DFADDR	2	Current Display File Address
MASKB	1	Working Byte - (P FLAG Shifted Right 1) (bit 0 = OVER) (bit 2 = INVERSE) (bit 4 = INK Complement of PAPER (bit 6 = PAPER Complement of INK
ATTBYT	1	Working Byte - (Copy of ATTR P)
GTINDX	1	'Get' Index - Used by GTCHAR
STRGCT	2	String Count - Contains remaining byte count when BC=3 (Screen Full) is returned from the Write String service WRSTRG (WRSTR2).

MARGIN	1	Margin - Margin Adjust (0/1)
DFBIT	1	Display File Bit - Current Bit Position
ATTMSK	1	Working Byte - (Copy of MASK P)

Initial values set via INIT40 (INIT4B) are as follows:

Variable Name	Value
SCRCTL	1701H
BOTLN	17H
SCRLCT	1H
CHTBL	(Internal to Module)
GRTBL	(Internal to Module)
LINLEN	28H
CLRPOS	1829H
DFADDR	4000H
GTINDX	80H
STRGCT	0H
MARGIN	1H
DFBIT	7H

The following are the variables used for passing parameters in BASIC and their values as initialized by INIT4B:

Variable Name	Size	Value
DATAB	1	0H
LINCOL	2	0H
CLRCTL	2	1800H
GETCTL	2	0H

In addition, VIDMOD, PARAM$ and other system variables must be available to these routines. At minimum, chunks 0-3 and chunk 7 must be enabled in the Home Bank.

Location:

This package can be incorporated into a machine code program within the memory range from chunk 4 through 7, taking into consideration the remapping of certain structures when the second display file is open (Dual Screen Mode only). NOTE: Machine code above RAMTOP is not moved.

Registers:

Other than as documented for output values, no claims are made as to preservation of any register contents except for the IY Register which must always contain the value 5C3AH for access to the standard system variables.

Automatic Scrolling:

As initialized, test for scrolling will be made when the print position goes to the next line following the bottom line on screen (BOTLN=23=24th line). Condition Code 3 (Screen Full) will be returned since SCRLCT will decrement to zero. If SCRLCT is set to some larger value, then the parameters in SCRCTL will be used to automatically scroll the designated number of lines beginning at the specified line number. As initialized, this will scroll the entire screen up. By performing a POKE or setting the variables BOTLN and SCRCTL to the desired values, automatic scrolling can be done using smaller sections of the screen. When working from BASIC it is recommended that BOTLN be set to Line 21 (15H) and SCRCTL+1 be set to 21 (15H) to avoid conflict with the Edit Line which uses the bottom two lines of the screen. Note that once SCRLCT expires, it will be set to 1. If a different value is desired, it must be reinitialized by the user after receiving the 'Screen Full' condition.

By setting the SCRCTL variable and invoking the SCROLL (SCRLB) routine any portion of the screen may be scrolled at any time.

Margin Control:

In 40-Column Mode, there are actually 42 character positions per line. The variable MARGIN determines the offset of the beginning of the 40 column line from the left side of the screen and has valid offset values of 0 or 1. An offset value of 1 centers the 40 column line on the screen; 0 begins at the extreme left side. The default value is 1. When MARGIN is set to 0, the variable LINLEN can be set to 42 to permit access to the 2 extra print positions. Whenever MARGIN and/or LINLEN are modified, a 'Set Cursor' operation should be done to insure the integrity of the print position.

NOTE: Since the different MARGIN values result in different pixel positions for the columns, care must be taken in mixing line length and margin values on the same line.

Attribute Control:

Attribute and masking (Inverse/Over) control information will be taken from the system variables ATTR P, MASK P and P FLAG as defined below. These variables contain the 'permanent' attribute controls set via the BASIC commands PAPER, INK, BRIGHT, FLASH, INVERSE, and OVER, or by directly writing to the specified locations.

In 40-Column Mode, the 6-pixel character width results in characters crossing attribute byte boundaries in the display file. Every four columns across a line are controlled by three attribute bytes. This constraint must be taken into consideration when mixing attributes within a line. Inverse and Over are applied to individual characters and are therefore not subject to the above limitation.

NAME	ADDRESS	CONTENTS
ATTR P	23693	Bit 7 - FLASH 6 - BRIGHT 5 4 - PAPER 3/ 2 1 - INK 0/
MASK P	23694	SAME FORMAT AS ATTR P. USED FOR 'TRANSPARENT' DISPLAY: For each bit that is set to 1, the corresponding information will be taken from the current screen position instead of from ATTRP.
P FLAG	23697	BIT 7 PAPER=COMPLEMENT OF INK 5 INK=COMPLEMENT OF PAPER 3 - INVERSE 1 - OVER (New Characters XOR'd with Old)

ADDITIONAL NOTES:

1. All screen operations done by the system ROM (PRINT, LIST Edit line I/O,etc.) work with the standard 8-pixel wide characters.

APPENDIX
C-3

```
        NAME ADL - ASC 003 40-COL.MODE SUPPORT
;
;
;
;
;
;
;
;
;                 ************************************
;                 *                                  *
;                 *              TIMEX               *
;                 * APPLICATION DEVELOPMENT LIBRARY  *
;                 *                                  *
;                 * NAME: 40-COL.MODE SUPPORT        *
;                 *                                  *
;                 * ASC NO:  003                     *
;                 * VERSION: 001                     *
;                 * AUTHOR:  C. CORCORAN             *
;                 * DATE:    12/13/83                *
;                 ************************************
```

```
                        SUBTTL DEFINITIONS
                ;
                ;
                ;                       ****DEFINITIONS****
                ;
                        INTERN  WRCHAR, WRSTRG, SETCUR, CLRSCN, SCROLL
                        INTERN  GTCHAR, GETATT, GETCUR
                ;
                        INTERN  WRCHRB, WRSTRB, SETCUB, CLRSCB, SCRLB
                        INTERN  GTCHRB, GETATB, GETCUB
                ;
                        INTERN  INIT40,INIT48
                ;
                ;
=0018           SCRSZ           EQU     24      ; 24 LINES
=1701           SCINIT          EQU     1701H   ; SCROLL CONTROL INITIALIZATION
=1800           CLINIT          EQU     1800H   ; CLEAR SCREEN CTL. INIT.
=0429'          CHRSET          EQU     ((CHRST)-100H)  ;CHAR.TABLE-100H
=0729'          GRPHST          EQU     ((GRPST)-100H) ; STD.GRAPHICS TABLE
                ;
=1720           RECLEN          EQU     1720H   ; ROUTINE IN HOME ROM
                ;
=5C48           VARS            EQU     5C48H   ; SYSTEM VARIABLES
=5C7B           UDG             EQU     5C7BH   ;
=5C7D           COORDS          EQU     5C7DH   ;
=5C8D           ATTR_P          EQU     5C8DH   ;
=5C8E           MASK_P          EQU     5C8EH   ;
=5C91           P_FLAG          EQU     5C91H   ;
=5CC2           VIDMOD          EQU     5CC2H   ;
=5CC3           PARAMS          EQU     5CC3H   ;  (Location 23747)

```

```
                              SUBTTL INPUTS AND ENTRIES
                        ;
                        ;
                        ;
                        ;                **PARAMETER INPUTS AND ENTRY POINTS FROM BASIC**
                        ;
                        ;                                                              WITH
                        ;                                                         MODULE LOADED
                        ;                                                         AT 57344(E000H)
                        ;                                                         DECIMAL ADDRESS
                        ;                                                         ---------------
0000'  20               DATAB       DEFB    20H    ; CHAR.CODE FROM BASIC            57344
0001'  C3 0040'         WRCHRB:     JP      WRCH0  ; ENTRY TO WRITE CHARACTER        57345
0004'  C3 0169'         WRSTRB:     JP      WRSTR0 ; ENTRY TO WRITE STRING           57348
0007'  0000             LINCOL      DEFW     0     ; SET CURSOR PARAMETERS
                                                   ;   LINCOL=COL. (0-39)            57351
                                                   ;   LINCOL+1=LINE (0-23)          57352
0009'  C3 0192'         SETCUB:     JP      SETCB0 ; ENTRY TO SET CURSOR POSN.       57353
000C'  1800             CLRCTL      DEFW    1800H  ; CLEAR SCREEN CONTROLS
                                                   ;   CLRCTL=STARTING LINE NO.      57356
                                                   ;   CLRCTL+1=LINE COUNT           57357
000E'  C3 024F'         CLRSCB:     JP      CLRSB0 ; ENTRY TO CLEAR SCREEN           57358
0011'  0000             SPARE0      DEFW     0     ; NOT USED (ALIGNMENT ONLY)
0013'  0000             SPARE1      DEFW     0     ;
0015'  0000             SPARE2      DEFW     0     ;
0017'  0000             SPARE3      DEFW     0     ;
0019'  0000             GETCTL      DEFW     0     ; "GET" CONTROL FROM BASIC        57369
                                                   ; FORMAT IS AS FOR LINCOL
001B'  C3 02D7'         GTCHRB:     JP       GTCH80 ; ENTRY TO GET CHARACTER         57371
001E'  C3 037E'         GETATB:     JP       GETA80 ; ENTRY TO GET ATTRIBUTE         57374
0021'  C3 039C'         GETCUB:     JP       GETC80 ; ENTRY TO GET CURSOR POSN.      57377
0024'  00               SPARE4      DEFB    0      ; NOT USED                        57380
0025'  C3 0389'         INIT48      JP       INIT40 ; ENTRY TO INITIALIZE 40-COL.    57381
0028'  1701             SCRCTL      DEFW     1701H ; SCROLL CONTROL
                                                   ;   SCRCTL=STARTING LINE NO.      57384
                                                   ;   SCRCTL+1=LINE COUNT           57385
002A'  C3 01A2'         SCRLB:      JP       SCRL80 ; ENTRY TO SCROLL                57386
```

```
                              SUBTTL  OTHER VARIABLES
                        ;
002D'  17               BOTLN       DEFB     17H   ; BOTTOM LINE (LINE AFTER         57389
                                                   ; WHICH SCREEN IS CONSIDERED
                                                   ; FULL.  AUTOMATIC SCROLL
                                                   ; WILL BE DONE IF SCRLCT
                                                   ; DOES NOT DECREMENT TO 0.
002E'  01               SCRLCT      DEFB     1     ; SCROLL COUNT - 1 PLUS NO.       57390
                                                   ; OF TIMES AUTOMATIC SCROLL
                                                   ; WILL BE DONE.
002F'  0429'            CHTBL       DEFW    CHRSET ; CHARACTER TABLE                 57391
0031'  0729'            GRTBL       DEFW    GRPHST ; GRAPHICS TABLE                  57393
0033'  28               LINLEN      DEFB      28H  ; LINE LENGTH (40/42)             57395
0034'  1829             CURPOS      DEFW    1829H  ; CURRENT POSITION                57396
                        ;                          ; (INTERNAL FORMAT)
0036'  4000             DFADRS      DEFW    4000H  ; CURRENT DISPLAY FILE ADDRS.     57398
0038'  00               MASKB       DEFB    0      ; MASK TO BE APPLIED TO           57400
                        ;                          ; DISPLAY CHARACTERS
0039'  00               ATTBYT      DEFB    0      ; CURRENT ATTRIBUTES              57401
                        ;                          ;
003A'  80               GTINDX      DEFB    80H    ; INDEX FOR ADJUSTING             57402
                        ;                          ; CH.CODE IN GTCHAR
003B'  0000             STRGCT      DEFW    0      ; REMAINING COUNT FROM WRSTRG
                                                   ; WHEN 'SCREEN FULL'              57403
003D'  01               MARGIN      DEFB    1      ; MARGIN ADJUST (0/1)             57405
003E'  07               DFBIT       DEFB    7      ; BIT POSN.IN LINE(7,1,3,5)       57406
003F'  00               ATTMSK      DEFB    0      ; ATTRIBUTE MASK                  57407
```

```
                            SUBTTL WRITE CHARACTER
                    ;
0040'                   WRCH0:                              ; HERE FROM BASIC ENTRY TO DISPLAY THE
                                                            ; CHARACTER WHOSE CODE IS IN 'DATAB'
0040'   3A 0000'                LD      A,(DATAB)
                    ;
0043'                   WRCHAR:                             ; ENTRY WITH CODE IN A
0043'   CD 04FD'                CALL    LDATTR              ; GET ATTRIBUTE AND MASK CONTROLS
                                                            ;
                                                            ; ENTRY TO USE ATTRIBUTE VALUES IN
                                                            ; INTERNAL VARIABLES WITHOUT RELOADING
0046'   CD 04A1'        WRCH01: CALL    LDPOSN              ; LOAD REGISTERS FOR CURRENT POSITION
                                                            ;   BC=CURSOR POSITION FROM 'CURPOS'
                                                            ;   HL=DISPLAY FILE ADDRESS FROM 'DFADRS
                                                            ;   A=CODE FOR CHAR. TO BE DISPLAYED
0049'   FE 20                   CP      20H                 ; TEST VALID RANGE
004B'   DA 013F'                JP      C,INVPAR            ; < 20H
004E'   FE A5                   CP      0A5H                ;
0050'   D2 013F'                JP      NC,INVPAR             > 0A4H
0053'   C5                      PUSH    BC                  ; SAVE CURSOR POSITION
0054'   FE 80                   CP      80H                 ; TEST IF ASCII PRINTABLE (20H-7FH)
0056'   38 15                   JR      C,WRCH12            ; YES
0058'   FE 90                   CP      90H                 ; TEST IF STD.GRAPHICS(80-8FH)
005A'   38 09                   JR      C,WRCH11
005C'   ED 4B 5C7B              LD      BC,(UDG)            ; USER -DEFINED GRAPHICS(90-A4H)
0060'   05                      DEC     B                   ; ADJUST ADDRESS-100H
0061'   D6 70                   SUB     70H                 ; ADJUST FOR INDEX INTO TABLE
0063'   18 0C                   JR      WRCH13
0065'   ED 4B 0031'     WRCH11  LD      BC,(GRTBL)          ; ADDRESS OF GRAPHICS TABLE
0069'   D6 60                   SUB     60H                 ; ADJUST FOR INDEX INTO TABLE
006B'   18 04                   JR      WRCH13
006D'   ED 4B 002F'     WRCH12  LD      BC,(CHTBL)          ; CHARACTER TABLE
0071'   EB              WRCH13  EX      DE,HL               ; DE=POSN.IN DISPLAY FILE
0072'   26 00                   LD      H,0
0074'   6F                      LD      L,A                 ; CODE IS INDEX INTO TABLE
0075'   29                      ADD     HL,HL
0076'   29                      ADD     HL,HL
0077'   29                      ADD     HL,HL
0078'   09                      ADD     HL,BC               ; HL=PIXEL PATTERN IN TABLE
0079'   C1                      POP     BC
007A'   EB                      EX      DE,HL               ; DE=PIXEL PATTERN IN TABLE/HL=DF
007B'   79                      LD      A,C                 ; TEST IF END OF LINE
007C'   3D                      DEC     A
007D'   3A 0033'                LD      A,(LINLEN)
0080'   20 05                   JR      NZ,WRCH14
0082'   3C                      INC     A                   ; START OF NEW LINE
0083'   05                      DEC     B                   ; BUMP LINE NO.
0084'   4F                      LD      C,A                 ; LINLEN+1=START OF LINE
0085'   18 01                   JR      WRCH15
0087'   3C              WRCH14  INC     A
0088'   B9              WRCH15  CP      C                   ; TEST IF START OF LINE
0089'   D5                      PUSH    DE
```

```
008A'   CC 0143'                CALL    Z,TVFULQ            ; TEST IF PAST 'BOTTOM' LINE
008D'   D1                      POP     DE
                                                            ; HERE TO PUT CHARACTER IN DISPLAY FILE
008E'   C5              WRCH2   PUSH    BC                  ; CURSOR POSITION
008F'   E5                      PUSH    HL                  ; DF ADDRESS
0090'   3A 0038'                LD      A,(MASKB)           ; GET OVER AND INVERSE CONTROLS
0093'   06 FF                   LD      B,-1
0095'   1F                      RRA
0096'   38 01                   JR      C,WRCH3             ; IF XORING NEW INTO OLD
0098'   04                      INC     B                   ; B=-1 IF XORING  =0 IF NOT
0099'   1F              WRCH3   RRA
009A'   1F                      RRA
009B'   9F                      SBC     A,A
009C'   4F                      LD      C,A                 ; C=-1 FOR INVERSE  =0 IF NOT
009D'   3E 08                   LD      A,8                 ; SCAN COUNT
009F'   08              WRCH5   EX      AF,AF'              ; SAVE SCAN COUNT IN ALTERNATE
00A0'   C5                      PUSH    BC                  ; SAVE MASK VALUES
00A1'   D5                      PUSH    DE                  ; SAVE CHAR.TABLE ADRS
00A2'   DD 21 0000              LD      IX,0                ; SAVE PTR.TO STACK
00A6'   DD 39                   ADD     IX,SP
00A8'   56                      LD      D,(HL)              ; READ SCAN LINE FROM DF
00A9'   E5                      PUSH    HL                  ; SAVE ADDRESS
00AA'   23                      INC     HL                  ; NEXT BYTE
00AB'   5E              WRCH6   LD      E,(HL)              ; READ SCAN LINE FROM NEXT BYTE
00AC'   EB                      EX      DE,HL               ; SCANS TO HL. LAST DF PCS.IN DE
00AD'   78                      LD      A,B                 ; TEST IF 'OVER' IS ACTIVE
00AE'   A7                      AND     A
00AF'   20 1A                   JR      NZ,NOXOR            ; YES-RETAIN OLD DATA
00B1'   3A 003E'                LD      A,(DFBIT)           ; NO- CLEAR OLD DATA AT CHAR.POSN.
00B4'   D6 07                   SUB     7                   ;
00B6'   ED 44                   NEG
00B8'   01 03FF                 LD      BC,03FFH            ; MASK
00BB'   28 08                   JR      Z,NORR1             ; NO NEED TO ADJUST(CHAR.STARTS AT BIT 7)
00BD'   37                      SCF
00BE'   CB 18           NEXT1   RR      B                   ; SHIFT MASK 'A' TIMES
00C0'   CB 19                   RR      C                   ; (6 0'S START AT BIT 1 OF B, BIT 3 OF C,
00C2'   3D                      DEC     A                   ;  OR BIT 5 OF B)
00C3'   20 F9                   JR      NZ,NEXT1
00C5'   7C              NORR1   LD      A,H                 ; SCAN LINE FROM DF
00C6'   A0                      AND     B
00C7'   67                      LD      H,A                 ; RETAIN ADJACENT CHAR.PIXELS
00C8'   7D                      LD      A,L                 ; CLEAR CURRENT CHAR.PIXELS
00C9'   A1                      AND     C
00CA'   6F                      LD      L,A                 ; HL=OLD BIT ROW
00CB'   3A 003E'        NOXOR   LD      A,(DFBIT)           ; GET STARTING BIT POSN.
00CE'   D6 07                   SUB     7
00D0'   ED 44                   NEG
00D2'   E5                      PUSH    HL                  ; SAVE SCANS
00D3'   DD 6E 00                LD      L,(IX)              ; PTR. TO CHAR.SET
00D6'   DD 66 01                LD      H,(IX+1)
00D9'   46                      LD      B,(HL)              ; SCAN LINE FROM CHAR.SET TO BC
00DA'   0E 00                   LD      C,0                 ; (PIXELS IN B, BITS 7-2)
```

```
0ODC'  F5                    PUSH  AF               ; SAVE A AND FLAGS
000D'  78                    LD    A,B              ; PIXELS FROM CHAR.SET
00DE'  E6 FC                 AND   0FCH             ; LIMIT TO 6 PIXELS
00E0'  47                    LD    B,A              ;
00E1'  F1                    POP   AF               ; RESTORE A AND FLAGS
00E2'  E1                    POP   HL               ; RESTORE SCANS
00E3'  28 08                 JR    Z,NORR2          ; NO SHIFT NEEDED
00E5'  A7                    AND   A                ; CLEAR CARRY
00E6'  CB 18         NEXT2   RR    B                ; SHIFT 'A' TIMES
00E8'  CB 19                 RR    C
00EA'  3D                    DEC   A
00EB'  20 F9                 JR    NZ,NEXT2
00ED'  7C            NORR2   LD    A,H              ; SCAN FROM DF
00EE'  A8                    XOR   B                ; INSERT/COMBINE NEW CHAR.
00EF'  67                    LD    H,A
00F0'  7D                    LD    A,L
00F1'  A9                    XOR   C
00F2'  6F                    LD    L,A              ; DF XOR CH.SET->HL
00F3'  DD 7E 02              LD    A,(IX+2)         ; TEST IF INVERSE ACTIVE
00F6'  A7                    AND   A
00F7'  28 1A                 JR    Z,NOINVERT
00F9'  3A 003E'              LD    A,(DFBIT)
00FC'  D6 07                 SUB   7
00FE'  ED 44                 NEG
0100'  01 FC00               LD    BC,0FC00H        ; MASK TO INVERT
0103'  28 08                 JR    Z,NORR3
0105'  A7                    AND   A
0106'  CB 18         NEXT3   RR    B                ; SHIFT MASK 'A' TIMES
0108'  CB 19                 RR    C
010A'  3D                    DEC   A
010B'  20 F9                 JR    NZ,NEXT3
010D'  7C            NORR3   LD    A,H
010E'  A8                    XOR   B                ; INVERT CHARACTER
010F'  67                    LD    H,A
0110'  7D                    LD    A,L
0111'  A9                    XOR   C
0112'  6F                    LD    L,A
0113'  EB            NOINVERT EX   DE,HL            ; DF ADRS. TO HL-SCAN LINE IN DE
0114'  73                    LD    (HL),E           ; WRITE SCAN LINE TO DF
0115'  E1                    POP   HL               ; PREVIOUS BYTE
0116'  72                    LD    (HL),D           ; WRITE SCAN LINE TO DF
0117'  D1                    POP   DE               ; CHAR.SET
0118'  C1                    POP   BC               ; OVER/INVERSE INDICATORS
0119'  08                    EX    AF,AF'           ; RESTORE SCAN COUNT
011A'  24                    INC   H                ; NEXT SCAN IN DF
011B'  13                    INC   DE               ; NEXT BYTE IN CHAR.FILE
011C'  3D                    DEC   A                ; TEST IF MORE SCANS
011D'  C2 009F'              JP    NZ,WRCH5
0120'  25            WRCH7   DEC   H                ; LAST CHAR.SCAN
0121'  CD 04A9'              CALL  UPDATT           ; UPDATE ATTRIBUTE BYTE
0124'  E1                    POP   HL               ; STARTING ADRS.
0125'  C1                    POP   BC               ; CURSOR POSITION
```

```
0126'  0D                    DEC   C                ; ADJUST CURSOR POSITION
0127'  3A 003E'              LD    A,(DFBIT)        ; ADJUST BIT POSITION
012A'  D6 06                 SUB   6
012C'  32 003E'              LD    (DFBIT),A        ; STORE UPDATED POSITION
012F'  30 06                 JR    NC,WRCHXT        ; NEXT CHAR.IN SAME BYTE
0131'  C6 08                 ADD   A,8              ; NEXT CHAR.IN NEXT BYTE
0133'  32 003E'              LD    (DFBIT),A        ; STORE ADJUSTED VALUE
0136'  23                    INC   HL               ; ADJUST DF ADRS.
0137'  CD 0499'      WRCHXT  CALL  STPOSN           ; STORE NEW POSITION
013A'  0E 00         GOODRET LD    C,0              ; RETURN BC=0
013C'  06 00         ERRRET  LD    B,0              ; ENTER HERE WITH C NON-ZERO
013E'  C9                    RET
                     ;
013F'  0E 01         INVPAR  LD    C,1              ; RETURN BC=1 FOR INVALID PARAMETERS
0141'  18 F9                 JR    ERRRET
                     ;
0143'  3E 18         TVFULG  LD    A,SCRSZ          ; TEST IF NEW LINE IS OFF SCREEN
0145'  90                    SUB   B                ; A=LINE NO.
0146'  57                    LD    D,A              ; SAVE IN D
0147'  3A 002D'              LD    A,(BOTLN) ; GET BOTTOM LINE
014A'  BA                    CP    D
014B'  D2 0452'              JP    NC,UPDPOSN       ; ON SCREEN - RETURN TO WRITE CHAR.
                                                    ;  VIA UPDATE AND STORE POSITION
014E'  3A 002E'              LD    A,(SCRLCT)       ; TEST SCROLL COUNT
0151'  3D                    DEC   A
0152'  20 0B                 JR    NZ,TVFUL1        ; DO AUTOMATIC SCROLL USING SCRCTL
0154'  3E 01                 LD    A,1              ; REINITIALIZE TO 1
0156'  32 002E'              LD    (SCRLCT),A
0159'  C1                    POP   BC
015A'  C1                    POP   BC               ; DISCARD RETURN TO WRITE CHAR.
015B'  0E 03                 LD    C,3              ; RETURN BC=3 FOR SCREEN FULL
015D'  18 DD                 JR    ERRRET
015F'  32 002E'      TVFUL1  LD    (SCRLCT),A       ; UPDATE VARIABLE
0162'  ED 4B 002B'           LD    BC,(SCRCTL)      ; GET SCROLL CONTROLS (STARTING LINE
                                                    ;   AND LINE COUNT)
0166'  C3 018C'              JP    SCRLO            ; RETURN TO WRITE CHAR. VIA SCROLL
```

```
ADL - ASC 003 40-COL.MODE SUPPORT        CRZ80/11 version 10.36.14        16-Mar-84  12:43:23      Page 6
WRITE STRING   IO40.SRC

                             SUBTTL WRITE STRING
                    ;                                  ; HERE FROM BASIC ENTRY TO
                    ;                                  ; WRITE CHARACTER STRING TO SCREEN.
                    ;                                  ; STRING IDENTIFIER (CH.CODE) IN
                    ;                                  ; SYSTEM VARIABLE PARAMS AT 5CC3H
0169'  CD 040E'     WRSTRO  CALL  GETSTRG              ; GET STRING VAR.ADRS. TO HL
016C'  C8                   RET   Z                    ; NO STRING FOUND OR NULL STRING
                    ;                                  ; (BC CONTAINS STATUS)
                    ;
                    ;                                  ; ENTRY FROM MACHINE CODE WITH
                    ;                                  ; ADDRESS OF CHAR.CODE "STRING"
                    ;                                  ; IN HL AND LENGTH IN BC
                    ;
016D'  CD 04FD'     WRSTRG  CALL  LDATTR               ; GET ATTRIBUTE AND MASK CONTROLS
0170'  7E           WRSTLP  LD    A,(HL)               ; GET CODE
0171'  E5                   PUSH  HL                   ; SAVE ADRS. AND
0172'  C5                   PUSH  BC                   ; COUNT
0173'  CD 0046'             CALL  WRCH01               ; WRITE "A"
0176'  79                   LD    A,C                  ; TEST IF GOOD
0177'  B0                   OR    B
0178'  20 09                JR    NZ,WRSTX1            ; EXIT IF INVALID CODE OR
                                                       ; IF SCREEN FULL
017A'  C1           WRSTR3  POP   BC                   ; COUNT
017B'  E1                   POP   HL                   ; ADDRESS
017C'  23                   INC   HL                   ; NEXT CHAR.
017D'  0B                   DEC   BC                   ; ADJUST COUNT
017E'  78                   LD    A,B                  ; TEST IF DONE
017F'  B1                   OR    C
0180'  20 EE                JR    NZ,WRSTLP            ; WRITE NEXT CHAR.
0182'  C9                   RET                        ; RETURN BC=0
                    ;
0183'  79           WRSTX1  LD    A,C                  ; SAVE ERROR
0184'  FE 01                CP    1                    ; TEST IF UNRECOGNIZED CODE
0186'  28 F2                JR    Z,WRSTR3             ; CONTINUE
0188'  E1                   POP   HL                   ; REMAINING COUNT TO HL
0189'  22 003B'             LD    (STRGCT),HL          ; STORE REMAINING COUNT
018C'  E1                   POP   HL                   ; ADDRESS TO HL
018D'  0E 03                LD    C,3                  ; RETURN BC=3 FOR SCREEN FULL
018F'  06 00                LD    B,0                  ;
0191'  C9                   RET
                    ;

                    ;
                    ;
                    ;
```

```
ADL - ASC 003 40-COL.MODE SUPPORT        CRZ80/11 version 10.36.14        16-Mar-84  12:43:23      Page 7
POSITION CONTROL   IO40.SRC

                             SUBTTL POSITION CONTROL
                    ;
0192'               SETCBO:                            ; HERE FROM BASIC ENTRY.  PARAMETERS
                                                       ; IN LINCOL
0192'  ED 4B 0007'          LD   BC,(LINCOL)
                    ;
0196'               SETCUR:                            ; ENTRY WITH LINE/COL. IN BC REG.
0196'  CD 0436'             CALL   TSTPAR              ; TEST PARAMETERS FOR VALIDITY
0199'  CD 0447'             CALL   CONVFM              ; CONVERT TO INTERNAL FORMAT
019C'  CD 0452'             CALL   UPDPOSN             ; CALCULATE AND STORE POSITION
019F'  C3 013A'             JP     GOODRET             ; RETURN BC=0
                    ;
```

```
                                   SUBTTL SCROLL
                          ;
                          ;
     01A2'                SCRL80:                      ; HERE FROM BASIC ENTRY TO SCROLL
                          ;                            ; SCREEN
     01A2'  ED 4B 0028'           LD    BC,(SCRCTL)    ; GET CONTROL INFO.
                          ;
     01A6'                SCROLL:                      ; HERE WITH CONTROLS IN BC
                                                       ;  B=NO. OF LINES
                                                       ;  C=STARTING LINE NO.
     01A6'  78                    LD    A,B            ; TEST VALIDITY
     01A7'  A7                    AND   A
     01A8'  CA 013F'              JP    Z,INVPAR       ; ERROR IF COUNT=0
     01AB'  81                    ADD   A,C
     01AC'  FE 01                 CP    1
     01AE'  DA 013F'              JP    C,INVPAR       ; ERROR IF B+C<1
     01B1'  FE 19                 CP    25
     01B3'  D2 013F'              JP    NC,INVPAR      ; ERROR IF B+C>24
     01B6'  CD 01BC'              CALL  SCRLO          ; DO SCROLL
     01B9'  C3 013A'              JP    GOODRET        ; RETURN BC=0
                          ;
     01BC'  C5            SCRLO   PUSH  BC
     01BD'  3E 18                 LD    A,SCRSZ        ; GET STARTING LINE IN INTERNAL FORMAT
     01BF'  91                    SUB   C
     01C0'  47                    LD    B,A
     01C1'  3A 0033'              LD    A,(LINLEN)
     01C4'  3C                    INC   A              ; COL. 0
     01C5'  4F                    LD    C,A
     01C6'  CD 047E'              CALL  LNBU
     01C9'  C1                    POP   BC
     01CA'  E5                    PUSH  HL             ; SAVE STARTING ADRS.
     01CB'  C5                    PUSH  BC             ; SAVE ORIG.BC FOR EXIT
     01CC'  7D            TESTAD  LD    A,L            ; TEST IF AT START OF BLOCK
     01CD'  A7                    AND   A
     01CE'  28 5C                 JR    Z,STBLK        ; YES
     01D0'  07                    RLCA
     01D1'  07                    RLCA
     01D2'  07                    RLCA
     01D3'  4F                    LD    C,A            ; GET NO. OF LINES THIS BLOCK
     01D4'  3E 08                 LD    A,8
     01D6'  91                    SUB   C
     01D7'  B8                    CP    B              ; TEST AGAINST TOTAL LINES
     01D8'  38 4A                 JR    C,GRBLK        ; TOTAL GREATER THAN THIS BLOCK
     01DA'  78            INSDBLK LD    A,B
     01DB'  06 00                 LD    B,0            ; REMAINING COUNT
     01DD'  C5                    PUSH  BC
     01DE'  47            LOOP    LD    B,A            ; B=LINES THIS BLOCK
     01DF'  0E 08                 LD    C,8            ; C=SCAN COUNT
     01E1'  78            LOOP0   LD    A,B
     01E2'  C5                    PUSH  BC             ; SAVE SCAN COUNT
     01E3'  0F                    RRCA
     01E4'  0F                    RRCA
```

```
     01E5'  0F                    RRCA                 ; CALCULATE NO. OF BYTES
     01E6'  4F                    LD    C,A
     01E7'  06 00                 LD    B,0            ; BC=32*# OF LINES
     01E9'  EB            LOOP1   EX    DE,HL
     01EA'  21 FFE0               LD    HL,-20H        ; GET ADRS. OF PREV. LINE
     01ED'  19                    ADD   HL,DE
     01EE'  EB                    EX    DE,HL          ; TO DE
     01EF'  E5                    PUSH  HL             ; SAVE OF ADRS.
     01F0'  ED B0                 LDIR                 ; DO MOVE
     01F2'  E1                    POP   HL             ; GET ADRS.
     01F3'  24                    INC   H              ; NEXT SCAN LINE
     01F4'  C1                    POP   BC             ; SCAN COUNT
     01F5'  0D                    DEC   C
     01F6'  20 E9                 JR    NZ,LOOP0       ; MORE SCANS
     01F8'  C1                    POP   BC             ; RESIDUAL LINE COUNT
     01F9'  78                    LD    A,B
     01FA'  A7                    AND   A
     01FB'  28 04                 JR    Z,SCRLXT       ; DONE
     01FD'  2E 00                 LD    L,0            ; START OF NEXT BLOCK
     01FF'  18 CB                 JR    TESTAD         ; DO REMAINING LINE(S)
     0201'  C1            SCRLXT  POP   BC             ; ORIG.BC
     0202'  D1                    POP   DE             ; STARTING ADRS.
     0203'  C5                    PUSH  BC             ; SAVE ORIG.BC
     0204'  68                    LD    L,B            ; NO. OF LINES SCROLLED
     0205'  26 00                 LD    H,0            ;
     0207'  29                    ADD   HL,HL          ; 32*NO. OF LINES=
     0208'  29                    ADD   HL,HL          ; NO OF ATTRIBUTE BYTES
     0209'  29                    ADD   HL,HL          ; TO BE SCROLLED
     020A'  29                    ADD   HL,HL          ;
     020B'  29                    ADD   HL,HL          ;
     020C'  44                    LD    B,H            ; COUNT TO BC
     020D'  4D                    LD    C,L            ;
     020E'  62                    LD    H,D            ; ADRS. TO HL
     020F'  6B                    LD    L,E            ;
     0210'  CD 04E0'              CALL  CALCATT        ; ATTRIBUTE ADRS. TO HL
     0213'  EB                    EX    DE,HL          ;
     0214'  21 FFE0               LD    HL,-20H        ; ADRS. OF PREV.ATTR.BYTE
     0217'  19                    ADD   HL,DE
     0218'  EB                    EX    DE,HL          ; PREV.BYTE DE
     0219'  ED B0                 LDIR                 ; SCROLL ATTRIBUTES
     021B'  C1                    POP   BC             ; ORIG. BC
     021C'  79                    LD    A,C            ; STARTING LINE
     021D'  80                    ADD   A,B            ; ADD NO. OF LINES MOVED
     021E'  3D                    DEC   A              ; LAST LINE SCROLLED
     021F'  4F                    LD    C,A
     0220'  06 01                 LD    B,1            ; CLEAR 1 LINE
     0222'  18 45                 JR    CLRSC0         ; CLEAR VACATED LINE AND RETURN
                          ;
     0224'  4F            GRBLK   LD    C,A
     0225'  78                    LD    A,B
     0226'  91                    SUB   C              ; ADJUST TOTAL LINE COUNT BY NO.
     0227'  47                    LD    B,A            ; OF LINES THIS BLOCK
```

```
0228'  C5                          PUSH BC
0229'  79                          LD   A,C               ; LOAD A NO. OF LINES THIS BLOCK
022A'  18 B2                       JR   LOOP
                          ;
022C'  05                 STBLK    DEC   B                ; ADJUST TOTAL LINE COUNT-1
022D'  C5                          PUSH  BC
022E'  0E 08                       LD    C,8              ; SCAN COUNT
0230'  C5                 STBLK0   PUSH  BC               ; SAVE SCAN COUNT
0231'  EB                 STBLK1   EX    DE,HL
0232'  21 F8E0                     LD    HL,-720H
0235'  19                          ADD   HL,DE
0236'  EB                          EX    DE,HL            ; ADRS. OF PREV. LINE
0237'  01 0020                     LD    BC,32            ; BYTE COUNT
023A'  E5                          PUSH  HL
023B'  ED B0                       LDIR                   ; DO MOVE
023D'  E1                          POP   HL
023E'  24                          INC   H                ; TO NEXT SCAN LINE
023F'  C1                          POP   BC
0240'  0C                          DEC   C                ; TEST IF MORE SCANS
0241'  20 ED                       JR    NZ,STBLK0
0243'  C1                          POP   BC               ; REMAINING LINE COUNT
0244'  78                          LD    A,B
0245'  A7                          AND   A
0246'  28 B9                       JR    Z,SCRLXT
0248'  11 F820                     LD    DE,-7E0H         ; ADJUST TO LINE 1
024B'  19                          ADD   HL,DE
024C'  C3 01CC'                    JP    TESTAD           ; BC=LINE COUNT
                                                          ; HL=DF ADDRESS
                          ;
```

```
                                   SUBTTL CLEAR SCREEN
                          ;
                          ;
024F'                     CLRSB0:                         ; HERE FROM BASIC ENTRY TO CLEAR SCREEN
024F'  ED 4B 000C'                 LD   BC,(CLRCTL)       ; GET CONTROL INFO.
                          ;
0253'                     CLRSCN:                         ; ENTRY WITH BC=LINE COUNT AND
                                                          ; STARTING LINE NO. FOR CLEAR
0253'  78                          LD   A,B
0254'  A7                          AND  A                 ; TEST VALIDITY
0255'  CA 013F'                    JP   Z,INVPAR          ; ERROR IF COUNT=0
0258'  81                          ADD  A,C
0259'  FE 01                       CP   1                 ;
025B'  DA 013F'                    JP   C,INVPAR          ; ERROR IF B+C<1
025E'  FE 19                       CP   25
0260'  D2 013F'                    JP   NC,INVPAR         ; ERROR IF B+C>24
0263'  CD 0269'                    CALL  CLRSC0           ; DO SERVICE
0266'  C3 013A'                    JP    GOODRET          ; RETURN BC=0
                          ;
                          ;
0269'  CD 04FD'           CLRSC0   CALL  LDATTR           ; GET ATTRIBUTE CTL
026C'  C5                          PUSH  BC               ; ORIGINAL BC
026D'  3E 18                       LD   A,SCRSZ           ; CONVERT TO INTERNAL FORMAT
026F'  91                          SUB   C
0270'  47                          LD   B,A
0271'  3A 0033'                    LD   A,(LINLEN)
0274'  3C                          INC  A                 ; SET TO COL.0
0275'  4F                          LD   C,A
0276'  CD 047E'                    CALL  LNBU             ; GET ADDRESS
0279'  50                          LD    D,B
027A'  59                          LD    E,C              ; SAVE POSITION
027B'  C1                          POP   BC               ; ORIG. BC
027C'  D5                          PUSH  DE               ; SAVE CURSOR POSITION
027D'  7D                 CLRSC1   LD    A,L              ; GET # OF LINES THIS BLOCK
027E'  07                          RLCA
027F'  07                          RLCA
0280'  07                          RLCA
0281'  4F                          LD     C,A
0282'  3E 08                       LD     A,8
0284'  91                          SUB    C
0285'  B8                          CP     B               ; COMPARE TO TOTAL LINE COUNT
0286'  38 47                       JR     C,CLRSC7
0288'  78                 CLRSC2   LD     A,B             ; NO. OF LINES
0289'  06 00                       LD     B,0             ; REMAINING LINES
028B'  C5                          PUSH   BC
028C'  47                 CLRSC3   LD     B,A
028D'  0E 08                       LD     C,8             ; SCAN COUNT
028F'  78                 CLRSC4   LD     A,B
0290'  C5                          PUSH   BC              ; SAVE LINE CNT./SCAN CNT.
0291'  E6 07                       AND    7
0293'  0F                          RRCA
0294'  0F                          RRCA
```

```
     0295'  0F                       559             RRCA
     0296'  4F                       560             LD     C,A                  ; BC=32*NO. OF LINES
     0297'  06 00                    561             LD     B,0                  ; (=0 IF 256 FOR 8 LINES)
     0299'  0D                       562             DEC    C                    ; ADJUST
     029A'  E5                       563     CLRSC5  PUSH   HL
     029B'  54                       564             LD     D,H
     029C'  5D                       565             LD     E,L
     029D'  36 00                    566             LD     (HL),00              ; CLEAR DF
     029F'  13                       567             INC    DE
     02A0'  ED B0                    568             LDIR
     02A2'  E1                       569             POP    HL
     02A3'  24                       570             INC    H                    ; NEXT SCAN ROW
     02A4'  C1                       571             POP    BC                   ; POP LINE/SCAN COUNT
     02A5'  0D                       572             DEC    C                    ; DECR. SCAN COUNT
     02A6'  20 E7                    573             JR     NZ,CLRSC4            ; NEXT SCAN
     02A8'  E5                       574             PUSH   HL                   ; SAVE NEXT DF ADRS.
     02A9'  25                       575             DEC    H                    ; LAST SCAN OF CHAR.
     02AA'  CD 04ED'                 576             CALL   CALCATT              ; GET ADRS. IN ATTRIBUTE FILE
     02AD'  78                       577             LD     A,B                  ; NO. OF LINES THIS BLOCK
     02AE'  E6 07                    578             AND    7
     02B0'  0F                       579             RRCA
     02B1'  0F                       580             RRCA
     02B2'  0F                       581             RRCA
     02B3'  4F                       582             LD     C,A                  ; BC=32*NO. OF LINES
     02B4'  06 00                    583             LD     B,0
     02B6'  0D                       584             DEC    C                    ; ADJUST
     02B7'  54                       585             LD     D,H
     02B8'  5D                       586             LD     E,L
     02B9'  3A 0039'                 587             LD     A,(ATTBYT)           ; ATTRIBUTE VALUE
     02BC'  77                       588             LD     (HL),A               ; UPDATE ATTRIBUTE FILE
     02BD'  13                       589             INC    DE                   ;
     02BE'  ED B0                    590             LDIR                        ;
     02C0'  E1                       591             POP    HL                   ; DF ADRS.(LAST SCAN+100H)
     02C1'  C1                       592             POP    BC                   ; TOTAL LINE COUNT
     02C2'  78                       593             LD     A,B
     02C3'  A7                       594             AND    A
     02C4'  28 05                    595             JR     Z,CLRSXT
     02C6'  2E 00                    596             LD     L,0                  ; HL=START OF NEXT BLOCK
     02C8'  C3 0270'                 597             JP     CLRSC1               ; B=REMAINING LINE COUNT
     02CB'  C1                       598     CLRSXT  POP    BC                   ; CURSOR POSITION
     02CC'  C3 0452'                 599             JP     UPDPOSN              ; RETURN VIA UPDATE AND STORE POSITION
     02CF'  4F                       600     CLRSC7  LD     C,A                  ; SAVE NO. LINES THIS BLOCK
     02D0'  78                       601             LD     A,B
     02D1'  91                       602             SUB    C                    ; ADJUST TOTAL LINE COUNT
     02D2'  47                       603             LD     B,A
     02D3'  C5                       604             PUSH   BC                   ; REMAINING LINE COUNT
     02D4'  79                       605             LD     A,C                  ; LINES THIS BLOCK
     02D5'  18 B5                    606             JR     CLRSC3               ;
                                     607     ;
```

```
                                     609             SUBTTL 'GET' ROUTINES
                                     610     ;
                                     611     ;
     02D7'                           612     GTCH80:                             ; HERE FROM BASIC ENTRY TO GET CHARACTER
                                     613                                         ; (RETURNS CODE FOR CHARACTER AT
                                     614                                         ;  POSITION SPECIFIED IN GETCTL)
     02D7'  ED 4B 0019'              615             LD     BC,(GETCTL)          ; GET CONTROL INFO.
                                     616     ;
     02DB'                           617     GTCHAR:                             ; ENTRY WITH POSITION IN BC
     02DB'  CD 0436'                 618             CALL TSTPAR                 ; TEST PARAMETERS
     02DE'  3A 003E'                 619             LD     A,(DFBIT)            ; SAVE CURRENT BIT POSITION
     02E1'  F5                       620             PUSH   AF
     02E2'  CD 0447'                 621             CALL   CONVFM               ; CONVERT TO INTERNAL FORMAT
     02E5'  CD 0457'                 622             CALL   CALCPOS              ; GET DF ADDRESS AND BIT POS.
     02E8'  ED 5B 002F'              623             LD     DE,(CHTBL)           ; CHAR.TABLE
     02EC'  06 60                    624             LD     B,96                 ; NO. OF PRINTABLE CHARACTERS
     02EE'  3E 80                    625             LD     A,80H                ; SET ADJUSTMENT INDEX
     02F0'  32 003A'                 626     GTCH1   LD     (GTINDX),A
     02F3'  14                       627             INC    D                    ; ADJUST TO START OF TABLE
     02F4'  C5                       628     GTCH2   PUSH   BC                   ; SAVE COUNT
     02F5'  E5                       629             PUSH   HL                   ; SAVE ADRS. IN DF
     02F6'  D5                       630             PUSH   DE                   ; SAVE ADRS. IN CHAR.TABLE
     02F7'  CD 0513'                 631             CALL   GTC2BC               ; GET SCAN LINE FROM DF TO REG.B
                                     632                                         ; BITS 7-2
     02FA'  78                       633     GTCH22  LD     A,B
     02FB'  E6 FC                    634             AND    0FCH                 ; 6 BITS TO A
     02FD'  47                       635             LD     B,A                  ; DF CHAR.SCAN ROW IN B
     02FE'  EB                       636             EX     DE,HL                ; CHAR.SET PTR. TO HL
     02FF'  7E                       637             LD     A,(HL)               ; PIXEL ROW FROM CHAR.SET
     0300'  E6 FC                    638             AND    0FCH                 ; MASK TO 6 BITS
     0302'  A8                       639             XOR    B                    ; TEST AGAINS DF IMAGE
     0303'  28 10                    640             JR     Z,GTCH3              ; MATCH
     0305'  F5                       641             PUSH   AF
     0306'  3A 003A'                 642             LD     A,(GTINDX)           ; TEST IF LOOKING AT STD.GRAPHICS
     0309'  FE 90                    643             CP     90H
     030B'  20 03                    644             JR     NZ,GTCH23
     030D'  F1                       645             POP    AF
     030E'  18 38                    646             JR     GTCH4                ; DO NOT TEST INVERSE IF STD.GR.
     0310'  F1                       647     GTCH23  POP    AF
     0311'  FE FC                    648             CP     0FCH                 ; TEST IF INVERSE
     0313'  20 36                    649             JR     NZ,GTCH4             ; DOES NOT MATCH
     0315'  4F                       650     GTCH3   LD     C,A                  ; C=0 FOR MATCH  -4 FOR INVERSE
     0316'  06 07                    651             LD     B,7                  ; SCAN COUNT
     0318'  EB                       652     GTCH31  EX     DE,HL                ; DF ADRS.TO HL
     0319'  C5                       653             PUSH   BC          ; SAVE MATCH AND SCAN COUNT
     031A'  24                       654             INC    H           ; NEXT SCAN IN DF
     031B'  13                       655             INC    DE          ; NEXT ROW IN CHAR.SET
     031C'  CD 0513'                 656             CALL   GTC2BC               ; NEXT SCAN ROW TO BC
     031F'  78                       657             LD     A,B
     0320'  E6 FC                    658             AND    0FCH
     0322'  47                       659             LD     B,A
     0323'  EB                       660             EX     DE,HL                ; CHAR.SET PTR. TO HL
```

```
0324'  7E                      LD    A,(HL)         ; PIXEL ROW TO A
0325'  E6 FC                   AND   0FCH
0327'  A8                      XOR   B              ; TEST MATCH
0328'  C1                      POP   BC             ; GET PREV.MATCH AND SCAN COUNT
0329'  A9                      XOR   C
032A'  20 1F                   JR    NZ,GTCH4       ; NO MATCH-START AGAIN AT NEXT
032C'  10 EA                   DJNZ  GTCH31         ; DO NEXT SCAN
032E'  79                      LD    A,C            ; A=-4 IF MATCH ON INVERSE
032F'  C6 03                   ADD   A,3            ; SET TO -1 IF MATCH ON INVERSE
0331'  C1                      POP   BC             ; HERE IF MATCH- (SP)=PTR.TO CHAR.
0332'  C1                      POP   BC             ; IN TABLE;(SP+2)=CHAR.IN DF;
0333'  C1                      POP   BC             ; (SP+4)=CHAR.COUNT
0334'  4F                      LD    C,A            ; B=COUNT C=-1 IF MATCH ON INVERSE
0335'  3A 003A'                LD    A,(GTINDX)     ; CONVERT MATCH TO CHAR.CODE
0338'  90                      SUB   B
0339'  FE 20                   CP    20H            ; TEST IF MATCH ON SPACE
033B'  20 05                   JR    NZ,GTCH32      ; NO
033D'  0C                      INC   C              ; TEST IF MATCH ON INVERSE
033E'  20 02                   JR    NZ,GTCH32
0340'  3E 8F                   LD    A,8FH          ; LOAD CODE FOR GRAPHICS BLOCK
0342'  4F              GTCH32  LD    C,A            ; RETURN IN REG. C OF BC PAIR
0343'  06 00                   LD    B,0            ; AND IN REG. A
0345'  F1                      POP   AF
0346'  32 003E'                LD    (DFBIT),A      ; RESTORE DFBIT
0349'  79                      LD    A,C            ; CHAR.CODE TO A
034A'  C9                      RET
                       ;
034B'  E1              GTCH4   POP   HL             ; PTR. TO CHR. SET
034C'  11 0008                 LD    DE,8           ; MOVE ON TO NEXT CHARACTER
034F'  19                      ADD   HL,DE
0350'  5D                      LD    E,L
0351'  54                      LD    D,H
0352'  E1                      POP   HL             ; DF ADDRESS
0353'  C1                      POP   BC             ; CHAR. COUNT
0354'  10 9E                   DJNZ  GTCH2          ; DECREMENT CHAR.COUNT AND LOOK AGAIN
                       ;
0356'  3A 003A'                LD    A,(GTINDX)     ; TEST IF DONE
0359'  FE 80                   CP    80H            ; TEST IF STD.CHR.SET
035B'  20 0A                   JR    NZ,GTCH5       ; TRY GRAPHICS
035D'  ED 5B 0031'             LD    DE,(GRTBL)     ; GRAPHICS TABLE
0361'  06 10                   LD    B,16           ; NO. OF ENTRIES
0363'  3E 90                   LD    A,90H
0365'  18 89                   JR    GTCH1
0367'  FE 90           GTCH5   CP    90H            ; TEST IF STD.GRAPHICS
0369'  20 0C                   JR    NZ,GTCH6       ;
036B'  ED 5B 5C7B              LD    DE,(UDG)       ; TRY USER-DEFINED GRAPHICS
036F'  15                      DEC   D              ; ADJUST ADDRESS-100H
0370'  06 15                   LD    B,21           ; NO. OF ENTRIES
0372'  3E A5                   LD    A,0A5H         ; INDEX ADJUST
0374'  C3 02F0'                JP    GTCH1

                       ;                            ; NO MATCH AT ALL
```

```
0377'  F1              GTCH6   POP   AF             ; RESTORE ORIG. DFBIT
0378'  32 003E'                LD    (DFBIT),A
037B'  48                      LD    C,B            ; BC=0
037C'  AF                      XOR   A              ; A=0
037D'  C9                      RET

                                            ; GET ATTRIBUTE BYTE
                       ;
                       ;                    ; HERE FROM BASIC ENTRY
037E'  ED 4B 0019'     GETAB0: LD   BC,(GETCTL)
                       ;                    ; HERE WITH LINE/COL. IN BC
0382'                  GETATT:
0382'  CD 0436'                CALL  TSTPAR   ; TEST PARAMETERS
0385'  3A 003E'                LD    A,(DFBIT) ; SAVE CURRENT BIT POSITION
0388'  F5                      PUSH  AF
0389'  CD 0447'                CALL  CONVFM   ; CONVERT TO INTERNAL FORMAT
038C'  CD 0457'                CALL  CALCPOS  ; CALCULATE DF POSITION
038F'  CD 04ED'                CALL  CALCATT  ; CALCULATE ATTRIBUTE POSITION
0392'  7E                      LD    A,(HL)   ; ATTRIBUTE BYTE TO A
0393'  4F                      LD    C,A      ; PASS BACK IN BC
0394'  06 00                   LD    B,0
0396'  F1                      POP   AF       ; RESTORE (DFBIT)
0397'  32 003E'                LD    (DFBIT),A ;
039A'  79                      LD    A,C      ; ATTRIBUTE ALSO IN A
039B'  C9                      RET
                       ;
                       ;
                       ;                    ; GET CURSOR POSITION
039C'                  GETCB0:              ; HERE FROM BASIC ENTRY
039C'                  GETCUR:
039C'  ED 4B 0034'             LD   BC,(CURPOS)        ; GET INTERNAL POSITION
03A0'  CD 0447'                CALL CONVFM             ; CONVERT TO USER FORMAT
03A3'  3A 0033'                LD   A,(LINLEN)         ; TEST IF END OF LINE
03A6'  B9                      CP   C                  ; IF =40 OR 42
03A7'  20 0B                   JR   NZ,GETC1           ; NO
03A9'  0E 00                   LD   C,0                ; NEXT POSN.START OF NEXT LINE
03AB'  78                      LD   A,B
03AC'  3C                      INC  A                  ; BUMP TO NEXT LINE
03AD'  47                      LD   B,A
03AE'  FE 18                   CP   24                 ; TEST IF OFF SCREEN
03B0'  38 02                   JR   C,GETC1            ; NO
03B2'  06 17                   LD   B,23               ; POSN. IS AT BOTTOM LINE
03B4'  ED 43 0007'     GETC1   LD   (LINCOL),BC        ; STORE FOR BASIC PROGRAM
03B8'  C9                      RET                     ; VALUES ALSO IN BC
                       ;
```

```
                           SUBTTL INITIALIZE 40-COL.MODE
                   ;
                   ;
                   ;
0389'                INIT40:
0389'   21 1701                  LD   HL,SCINIT            ; INITIALIZE VARIABLES
038C'   22 0028'                 LD   (SCRCTL),HL          ; SCROLL CONTROL
038F'   3E 17                    LD   A,23                 ;
03C1'   32 002D'                 LD   (BOTLN),A            ; BOTTOM LINE
03C4'   3E 01                    LD   A,1                  ;
03C6'   32 002E'                 LD   (SCRLCT),A           ; SCROLL COUNT
03C9'   3E 28                    LD   A,40                 ;
03CB'   32 0033'                 LD   (LINLEN),A           ; LINE LENGTH
03CE'   3E 01                    LD   A,1                  ;
03D0'   32 0030'                 LD   (MARGIN),A           ; MARGIN
03D3'   21 1800                  LD   HL,CLINIT            ;
03D6'   22 000C'                 LD   (CLRCTL),HL          ; CLEAR SCREEN CONTROL
03D9'   AF                       XOR A
03DA'   32 003B'                 LD    (STRGCT),A          ; STRING COUNT
03DD'   32 003C'                 LD    (STRGCT+1),A        ;
03E0'   21 0429'                 LD    HL,CHRSET           ; STD. 40-COL.CHAR.SET
03E3'   22 002F'                 LD    (CHTBL),HL          ;
03E6'   21 0729'                 LD    HL,GRPHST           ; STD. 40-COL.GRAPHICS SET
03E9'   22 0031'                 LD    (GRTBL),HL          ;
                     ;                                     ; INITIALIZE BASIC INPUTS
                     ;
03EC'   32 0000'                 LD    (DATAB),A           ; DATA BYTE
03EF'   32 0007'                 LD    (LINCOL),A          ; COLUMN
03F2'   32 0008'                 LD    (LINCOL+1),A        ; LINE
03F5'   32 0019'                 LD    (GETCTL),A          ; "GET" COLUMN
03F8'   32 001A'                 LD    (GETCTL+1),A        ; "GET" LINE
                     ;
03FB'   21 0000                  LD    HL,0                ;
03FE'   22 5C7D                  LD    (COORDS),HL         ; PLOT POSITION
0401'   3A 0033'                 LD    A,(LINLEN)          ;
0404'   3C                       INC   A                   ; HOME POSITION TO BC
0405'   4F                       LD    C,A
0406'   06 18                    LD    B,SCRSZ             ; = LINE 0/COL.0
0408'   CD 0452'                 CALL  UPDPOSN             ; CALCULATE AND STORE HOME POSITION
040B'   C3 013A'                 JP    GOODRET             ; RETURN BC=0
                     ;
                     ;
                     ;
```

```
                           SUBTTL INTERNAL SUB-RTNS.
                     ;
                     ;
040E'   3A 5CC3      GETSTRG LD    A,(PARAMS)          ; GET STRING ID
0411'   E6 1F                AND   1FH                 ; MASK OFF UPPER BITS
0413'   F6 40                OR    40H                 ; STRING VARIABLE IDENTIFIER
0415'   57                   LD    D,A                 ; SAVE IN D
0416'   2A 5C4B              LD    HL,(VARS)           ; FIND STRING
0419'   7E           GTSTR1  LD    A,(HL)              ;
041A'   E6 7F                AND   07FH                ; TEST IF END OF VARS AREA
041C'   28 13                JR    Z,NOSTRG            ; NO FIND - RETURN BC=2
041E'   BA                   CP    D                   ; TEST IF MATCH
041F'   28 08                JR    Z,GTSTR2            ; FOUND STRING
0421'   D5                   PUSH DE                   ; SAVE STRING ID
0422'   CD 1720              CALL RECLEN               ; RETURNS ADRS. OF NEXT VAR. IN DE
0425'   EB                   EX    DE,HL               ; ADRS. TO HL
0426'   D1                   POP   DE                  ; RESTORE STRING ID
0427'   18 F0                JR    GTSTR1              ; LOOK AGAIN
0429'   23           GTSTR2  INC   HL                  ; GET LENGTH
042A'   4E                   LD    C,(HL)
042B'   23                   INC   HL
042C'   46                   LD    B,(HL)
042D'   23                   INC   HL                  ; FIRST TEXT CODE
042E'   78                   LD    A,B                 ; TEST IF NULL STRING
042F'   B1                   OR    C
0430'   C9                   RET                       ; RETURN (Z IF NULL STRING/NZ IF NOT)
                     ;
0431'   0E 02        NOSTRG  LD     C,2
0433'   06 00                LD     B,0
0435'   C9                   RET                       ; (Z AND BC=2 FOR NO FIND)
                     ;
                     ;

                     ;
                     ;
                                                       ; TEST PARAMETER VALIDITY
                                                       ; IF NOT VALID, DISCARDS RETURN
                                                       ; AND EXITS VIA INVPAR
0436'   3E 17        TSTPAR  LD    A,23                ; TEST LINE >23
0438'   B8                   CP    B
0439'   30 04                JR    NC,TSTPR1
043B'   F1           PARERR  POP   AF
043C'   C3 013F'             JP    INVPAR
043F'   3A 0033'     TSTPR1  LD    A,(LINLEN)
0442'   3D                   DEC   A
0443'   B9                   CP    C              ; TEST COL. >LINE LENGTH-1
0444'   38 F5                JR    C,PARERR
0446'   C9                   RET
                     ;
                                                       ; CONVERT LINE/COL. FROM USER TO
                                                       ; INTERNAL FORMAT AND VICE VERSA
                                                       ; USER FORMAT: LINES 0-23
```

```
                                                            ;               COL. 0-39(41)
                                                            ; INTERNAL FORMAT:
                                                            ;               LINES 24-1
                                                            ;               COL. (43)41-2
                                                            ;               (COL.1 END OF LINE)
                          ;
                          ;
0447'  3A 0033'           CONVFM  LD      A,(LINLEN)
044A'  3C                         INC     A
044B'  91                         SUB     C
044C'  4F                         LD      C,A               ; CONVERT
044D'  3E 18                      LD      A,SCRSZ
044F'  90                         SUB     B
0450'  47                         LD      B,A
0451'  C9                         RET
                          ;
                          ;
                          ;
0452'                     UPDPOSN:                          ; ENTER HERE WITH BC=LINE/COL.IN
                                                            ; INTERNAL FORMAT
0452'  CD 0457'                   CALL    CALCPOS           ; CALCULATE POSITION
0455'  18 42                      JR      STPOSN            ; STORE UPDATED POSITION AND RETURN
                          ;
                          ;                                 ; ROUTINE TO CALCULATE POSITION IN DF
                          ;                                 ; UPDATES BIT POSITION IN VARIABLE DFBIT
                          ;                                 ; RETURNS DF ADDRESS IN HL.  PRESERVES
                          ;                                 ; LINE/COL.POSITION IN BC
                          ;
0457'  CD 047E'           CALCPOS CALL    LNBU              ; GET DISPLAY FILE ADRS.FOR LINE
045A'  3A 0033'                   LD      A,(LINLEN)
045D'  3C                         INC     A
045E'  91                         SUB     C                 ; GET COL. NO.
045F'  F5                         PUSH    AF                ; SAVE COL. NO.(0-(LINLEN-1))
0460'  5F                         LD      E,A
0461'  87                         ADD     A,A
0462'  83                         ADD     A,E               ; 3 *(40-COL.POS) /4 = 32-COL.POS
0463'  CB 3F                      SRL     A
0465'  CB 3F                      SRL     A
0467'  5F                         LD      E,A               ;
0468'  3A 003D'                   LD      A,(MARGIN)        ; GET ADJUSTMENT VALUE
046B'  83                         ADD     A,E
046C'  5F                         LD      E,A
046D'  16 00                      LD      D,0               ; DE CONTAINS OFFSET INTO LINE
046F'  19                         ADD     HL,DE             ; HL CONTAINS DF ADDRESS
0470'  1E 07                      LD      E,7
0472'  F1                         POP     AF                ; A=COL.POSN.FOR 40 COLS.
0473'  E6 03                      AND     3                 ;
0475'  28 02                      JR      Z,CALCP2          ; STARTS AT BIT 7
0477'  5F                         LD      E,A               ; STARTS AT BIT 1,3 OR 5
0478'  3D                         DEC     A
0479'  83                 CALCP2  ADD     A,E
047A'  32 003E'                   LD      (DFBIT),A
```

```
047D'  C9                         RET                       ; BC=POS. HL=DF ADDRESS
                          ;
                          ;
047E'                     LNBU:                             ; GET DISPLAY FILE ADDRESS
                                                            ; FOR START OF LINE IN B
047E'  3E 18                      LD  A,SCRSZ
0480'  90                         SUB  B
0481'  57                         LD   D,A
0482'  0F                         RRCA
0483'  0F                         RRCA
0484'  0F                         RRCA
0485'  E6 E0                      AND  0E0H
0487'  6F                         LD   L,A
0488'  7A                         LD   A,D
0489'  E6 18                      AND  18H
048B'  F6 40                      OR   40H
048D'  67                         LD   H,A
048E'  3A 5CC2                    LD   A,(VIDMOD)           ; TEST IF USING DF1
0491'  CB 47                      BIT  0,A
0493'  C8                         RET  Z
0494'  3E 20                      LD   A,20H                ; USING DF2
0496'  B4                         OR   H
0497'  67                         LD   H,A
0498'  C9                         RET

0499'                     STPOSN:                           ; STORE CURSOR POSITION
0499'  ED 43 0034'                LD  (CURPOS),BC
049D'  22 0036'                   LD  (DFADRS),HL
04A0'  C9                         RET
                          ;
04A1'                     LDPOSN:                           ; LOAD CURSOR POSITION
04A1'  ED 4B 0034'                LD  BC,(CURPOS)
04A5'  2A 0036'                   LD  HL,(DFADRS)
04A8'  C9                         RET
                          ;
                          ;
04A9'                     UPDATT:                   ; UPDATE ATTRIBUTE BYTE FOR CHARACTER
                          ;                         ; JUST PRINTED
                          ;                         ; HL = ANY SCAN OF CHAR.IN DF
                          ;                         ;
                          ;                         ; IF CHARACTER SPANS ATTRIBUTE BYTE
                          ;                         ; BOUNDARY, BOTH ATTRIBUTE BYTES WILL
                          ;                         ; BE ADJUSTED
                          ;
                          ;
04A9'  CD 04E0'                   CALL CALCATT              ; ADDRS. OF ATTRIBUTE BYTE TO HL
04AC'  3A 003E'                   LD   A,(DFBIT)            ; SAVE BIT POSITION
04AF'  F5                         PUSH AF                   ;
04B0'  3A 0039'                   LD   A,(ATTBYT)           ; CURRENT ATTRIBUTE BYTE VALUE
04B3'  5F                         LD   E,A                  ; TO E
04B4'  3A 003F'                   LD   A,(ATTMSK)           ; MASK TO D
04B7'  57                         LD   D,A
```

```
04B8'  3A 0038'                   LD    A,(MASKB)        ; FLAGS
04BB'  47                         LD    B,A              ; TO B
04BC'  7E                 UPDAT0  LD    A,(HL)           ; BYTE FROM ATTRIBUTE FILE
04BD'  AB                         XOR   E
04BE'  A2                         AND   D
04BF'  AB                         XOR   E                ; NEW ATTR.FOR 0; OLD FOR 1
04C0'  CB 60                      BIT   4,B              ; SET INK COMPLEMENT OF PAPER?
04C2'  28 08                      JR    Z,UPDAT1         ;
04C4'  E6 F8                      AND   0F8H             ; SET INK TO BLACK
04C6'  CB 6F                      BIT   5,A              ; IS PAPER 4-7
04C8'  20 02                      JR    NZ,UPDAT1        ; YES - USE BLACK INK
04CA'  F6 07                      OR    7                ; NO  - USE WHITE INK
04CC'  CB 70              UPDAT1  BIT   6,B              ; SET PAPER COMPLEMENT OF INK?
04CE'  28 08                      JR    Z,UPDAT2         ;
04D0'  E6 C7                      AND   0C7H             ; SET PAPER TO BLACK
04D2'  CB 57                      BIT   2,A              ; IS INK 4-7
04D4'  20 02                      JR    NZ,UPDAT2        ; YES - USE BLACK PAPER
04D6'  F6 38                      OR    38H              ; NO  - USE WHITE PAPER
04D8'  77                 UPDAT2  LD    (HL),A           ; TO ATTRIBUTE FILE
04D9'  3A 003E'                   LD    A,(OFBIT)        ; TEST BIT POSITION
04DC'  FE 05                      CP    5
04DE'  30 08                      JR    NC,UPDAT3        ; CHAR.IN SINGLE BYTE IF STARTS
                          ;                              ; IN BIT 7 OR 5
04E0'  23                         INC   HL               ; CHAR.SPANS 2 BYTES IF STARTS
04E1'  3E 07                      LD    A,7              ; IN BIT 3 OR 1
04E3'  32 003E'                   LD    (OFBIT),A        ; TEMPORARILY SET TO 7
04E6'  18 D4                      JR    UPDAT0           ; UPDATE NEXT BYTE
                                                         ; (OFBIT=7 WILL FORCE EXIT AND
                                                         ;  ORIGINAL VALUE OF OFBIT WILL
                                                         ;  BE RESTORED)
                          ;
04E8'  F1                 UPDAT3  POP   AF               ; ORIGINAL OFBIT
04E9'  32 003E'                   LD    (OFBIT),A        ; RESTORE
04EC'  C9                         RET
                          ;

                          ;                              ; SUB-RTN. TO CALCULATE ADRS. OF
                          ;                              ; ATTRIBUTE BYTE FROM ADRS. OF
                          ;                              ; ANY SCAN ROW IN DF
                          ;
                          ;                              ; USED BY UPDATT AND GETATT
                          ;
04ED'  7C                 CALCATT LD    A,H              ; UPPER BYTE OF ADDRESS
04EE'  0F                         RRCA
04EF'  0F                         RRCA
04F0'  0F                         RRCA
04F1'  E6 03                      AND   03H
04F3'  F6 58                      OR    58H              ; ADRS. OF ATTRIBUTE BYTE
04F5'  CB 6C                      BIT   5,H              ; TEST WHICH DF
04F7'  28 02                      JR    Z,CALCA1         ; DF1
04F9'  F6 20                      OR    20H              ; DF2
04FB'  67                 CALCA1  LD    H,A              ; ADRS. OF ATTRIBUTE
```

```
04FC'  C9                         RET
                          ;
04FD'                     LDATTR:                        ; LOAD INTERNAL ATTRIBUTE VARIABLES
                                                         ; FROM SYSTEM VARIABLES
                                                         ;
04FD'  F5                         PUSH AF                ; SAVE A
04FE'  3A 5C8D                    LD    A,(ATTR_P)       ;
0501'  32 0039'                   LD    (ATTBYT),A       ;
0504'  3A 5C8E                    LD    A,(MASK_P)       ;
0507'  32 003F'                   LD    (ATTMSK),A       ;
050A'  3A 5C91                    LD    A,(P_FLAG)
050D'  0F                         RRCA                   ; SHIFT ODD BITS TO EVEN
050E'  32 0038'                   LD    (MASKB),A        ;
0511'  F1                         POP   AF
0512'  C9                         RET
                          ;
                          ;                              ; RTN. USED BY GTCHAR TO PUT
                          ;                              ; 6 PIXELS FROM DF IN B REG.BITS 7-2
                          ;                              ; FOR MATCHING AGAINST CHAR.SET
                          ;
0513'  E5                 GTC2BC  PUSH  HL               ; SAVE DF ADRS.
0514'  46                         LD    B,(HL)           ; SCAN LINE FROM DF
0515'  23                         INC   HL               ; NEXT BYTE
0516'  4E                 GTC2B1  LD    C,(HL)           ; BC CONTAINS CHAR.AT OFBIT
0517'  3A 003E'                   LD    A,(OFBIT)
051A'  D6 07                      SUB   7
051C'  ED 44                      NEG                    ; A=NO.OF BITS OFFSET IN BC
051E'  28 07                      JR    Z,GTC2B2         ; STARTS AT BIT 7
0520'  CB 11              GTCSHFT RL    C
0522'  CB 10                      RL    B                ; SHIFT 6 PIXELS FOR CHARACTER
0524'  3D                         DEC   A                ; TO B, BITS 7-2
0525'  20 F9                      JR    NZ,GTCSHFT
0527'  E1                 GTC2B2  POP   HL               ;
0528'  C9                         RET                    ; CHAR.IN B, BITS 7-2
                          ;

                                  INCLUDE CHST80
                                  SUBTTL CHAR.SET FOR 40/80 CO..MODES

                          ;
                          ; Dot patterns for characters on the TV screen:
                          ;       character with code x is at offsets 8x (top line) to 8x+7 (bottom line)
                          ;       0 = white, 1 = black, no margins between character spaces either
                          ;               vertically or horizontally

0529'  00                 CHRST   defb 00000000b         ; code 20       space
052A'  00                         defb 00000000b
052B'  00                         defb 00000000b
052C'  00                         defb 00000000b
052D'  00                         defb 00000000b
052E'  00                         defb 00000000b
052F'  00                         defb 00000000b
```

SEE APPENDIX C-2
FOR CHARACTER SET

```
ADL - ASC 003 40-COL.MODE SUPPORT        CRZ80/11 version 10.36.14        16-Mar-84  12:43:23        Page S-1
CHAR.SET FOR 40/80 COL.MODES    CHST80.SRC

A        Reserved        ATTBYT   0039            ATTMSK   003F            ATTR$P   5C8D            B        Reserved
BOTLN     002D           C        Reserved        CALCAT   04ED            CALCA1   04F8            CALCP0    0457
CALCP2    0479           CHRSET   0429            CHRST    0529            CHTBL    002F            CLINIT    1800
CLRCTL    000C           CLRSB0   024F            CLRSCB   000E IN         CLRSCN   0253 IN         CLRSC0    0269
CLRSC1    0270           CLRSC2   0288            CLRSC3   028C            CLRSC4   028F            CLRSC5    029A
CLRSC7    02CF           CLRSXT   02CB            CONVFM   0447            COORDS   5C70            CURPOS    0034
D        Reserved        DATAB    0000            DFADRS   0036            DFBIT    003E            E        Reserved
ERRRET    013C           GETAB0   037E            GETATB   001E IN         GETATT   0382 IN         GETC80    039C
GETCTL    0019           GETCUB   0021 IN         GETCUR   039C IN         GETC1    0384            GETSTR    040E
GOODRE    013A           GRBLK    0224            GRPHST   0729            GRPST    0829            GRTBL     0031
GTCHAR    020B IN        GTCH80   0207            GTCHRB   001B IN         GTCH1    02F0            GTCH2     02F4
GTCH22    02FA           GTCH23   0310            GTCH3    0315            GTCH31   0318            GTCH32    0342
GTCH4     034B           GTCH5    0367            GTCH6    0377            GTCSHF   0520            GTC2BC    0513
GTC2B1    0516           GTC2B2   0527            GTINDX   003A            GTSTR1   0419            GTSTR2    0429
H        Reserved        INIT4B   0025 IN         INIT40   0389 IN         INSDBL   01DA            INVPAR    013F
L        Reserved        LDATTR   04FD            LDPOSN   04A1            LINCOL   0007            LINLEN    0033
LNBU      047E           LOOP     01DE            LOOP0    01E1            LOOP1    01E9            M        Reserved
MARGIN    0030           MASKB    0038            MASK$P   5C8E            NEXT1    00BE            NEXT2     00E6
NEXT3     0106           NOINVE   0113            NORR1    00C5            NORR2    00ED            NORR3     010D
NOSTRG    0431           NOXOR    00CB            PARAM$   5CC3            PARERR   043B            PSW      Reserved
P$FLAG    5C91           RECLEN   1720            SCINIT   1701            SCRCTL   0029            SCRLB     002A IN
SCRLB0    01A2           SCRLCT   002E            SCRLXT   0201            SCRL0    019C            SCRCLL    01A6 IN
SCRSZ     0018           SETC80   0192            SETCUB   0009 IN         SETCUR   0196 IN         SP       Reserved
SPARE0    0011           SPARE1   0013            SPARE2   0015            SPARE3   0017            SPARE4    0024
STBLK     022C           STBLK0   0230            STBLK1   0231            STPOSN   0499            STRGCT    003B
TESTAD    01CC           TSTPAR   0436            TSTPR1   043F            TVFUL0   0143            TVFUL1    015F
UDG       5C7B           UPDATT   04A9            UPDAT0   04BC            UPDAT1   04CC            UPDAT2    04D8
UPDAT3    04E8           UPDPOS   0452            VARS     5C4B            VIDMOD   5CC2            WRCHAR    0043 IN
WRCHRB    0001 IN        WRCHXT   0137            WRCH0    0040            WRCH01   0046            WRCH11    0065
WRCH12    006D           WRCH13   0071            WRCH14   0087            WRCH15   0088            WRCH2     008E
WRCH3     0099           WRCH5    009F            WRCH6    00A8            WRCH7    0120            WRSTLP    0170
WRSTRB    0004 IN        WRSTRG   0160 IN         WRSTR0   0169            WRSTR3   017A            WRSTX1    0183

      No errors detected
```

```
Cross reference listing (MREF version 4.7)

Symbol     Refs (# = definition  $ = write  <blank> = read)

ATTBYT     111#     587      955      1018$
ATTMSK     119#     957      1020$
ATTR_P      49#    1017
BOTLN       95#     296      767$
CALCA1    1008     1010#
CALCAT     459      576      730      952      1001#
CALCP2     902      905#
CALCP0     622      729      875      883#
CHRSET      40#     103      779
CHRST       40     1056#
CHTBL      103#     152      623      780$
CLINIT      39#     774
CLRCTL      73#     511      775$
CLRSB0      76      510#
CLRSC0     471      523      527#
CLRSC1     540#     597
CLRSC2     549#
CLRSC3     552#     606
CLRSC4     554#     573
CLRSC5     563#
CLRSC7     548      600#
CLRSCB      31       76#
CLRSCN      28      513#
CLRSXT     595      598#
CONVFM     368      621      728      744      862#
COORDS      47#     792$
CURPOS     106#     743      933$     938
DATAB       66#     125      785$
DFADRS     108#     934$     939
DFBIT      118#     201      217      246      278      280$     283$
                    619      684$     714$     726      735$     906$
                    953      978      984$     991$    1035
ERRRET     287#     291      308
GETAB0      84      722#
GETATB      32       84#
GETATT      29      724#
GETC1      747      753      755#
GETC80      85      741#
GETCTL      81#     615      722      788$     789$
GETCUB      32       85#
```

```
Cross reference listing (MREF version 4.7)

Symbol    Refs (# = definition  $ = write  <blank> = read)

GETCUR      29     742#
GETSTR     319     806#
GOODRE     286#    370     392     524     798
GRBLK      415     473#
GRPHST      41#    104     781
GRPST       41    1920#
GRTBL      104#    149     700     782$
GTC2B1    1034#
GTC2B2    1038    1043#
GTC2BC     631     656    1031#
GTCH1      626#    703     710
GTCH2      628#    695
GTCH22     633#
GTCH23     644     647#
GTCH3      640     650#
GTCH31     652#    667
GTCH32     677     679     681#
GTCH4      646     649     666     688#
GTCH5      699     704#
GTCH6      705     713#
GTCHAR      29     617#
GTCHBO      83     612#
GTCHRB      32      83#
GTCSHF    1039#   1042
GTINDX     113#    626$    642     674     697
GTSTR1     811#    920
GTSTR2     815     821#
INIT40      34      87     763#
INIT4B      34      87#
INSDBL     416#
INVPAR     137     139     290#    385     388     390     517
                   520     522     845
LDATTR     128     327     527    1013#
LDPOSN     132     937#
LINCOL      69#    364     755$    786$    787$
LINLEN     105#    164     398     532     745     771$    793
                   846     862     884
LNBU       401     535     883     910#
LOOP       419#    479
LOOP0      421#    438
```

```
Cross reference listing (MREF version 4.7)

Symbol    Refs (# = definition  $ = write  <blank> = read)

LOOP1      428#
MARGIN     117#    773$    894
MASK8      109#    178     959    1023$
MASK_P      49#   1019
NEXT1      207#    210
NEXT2      233#    236
NEXT3      252#    255
NOINVE     245     262#
NORR1      205     211#
NORR2      231     237#
NORR3      250     256#
NOSTRG     813     830#
NOXOR      200     217#
PARAMS      52#    806
PARERR     844#    849
P_FLAG      50#   1021
RECLEN      43#    817
SCINIT      38#    764
SCRCTL      88#    310     378     765$
SCRL0      312     391     394#
SCRLB       31      91#
SCRLB0      91     376#
SCRLCT     100#    300     304$    309$    769$
SCRLXT     442     445#    500
SCROLL      28     380#
SCRSZ       37#    293     395     529     796     866     912
SETCB0      72     362#
SETCUB      31      72#
SETCUR      28     366#
SPARE0      77#
SPARE1      78#
SPARE2      79#
SPARE3      80#
SPARE4      86#
STBLK      407     481#
STBLK0     484#    496
STBLK1     485#
STPOSN     285     876     932#
STRGCT     115#    349$    777$    778$
TESTAD     405#    444     503
```

```
Cross reference listing (MREF version 4.7)

Symbol     Refs (# = definition  $ = write  <blank> = read)

TSTPAR     367      618      725      841#
TSTPR1     843      846#
TVFUL1     302      309#
TVFULQ     173      293#
UDG         46#     145      706
UPDAT0     961#     985
UPDAT1     966      969      971#
UPDAT2     972      975      977#
UPDAT3     980      990#
UPDATT     274      943#
UPDPOS     298      369      599      797      873#
VARS        45#     817
VIDMOD      51#     924
WRCH0       67      123#
WRCH01     132#     331
WRCH11     144      149#
WRCH12     142      152#
WRCH13     148      151      153#
WRCH14     165      170#
WRCH15     169      171#
WRCH2      176#
WRCH3      181      183#
WRCH5      188#     272
WRCH6      196#
WRCH7      273#
WRCHAR      28      127#
WRCHRB      31       67#
WRCHXT     281      285#
WRSTLP     328#     342
WRSTR0      68      319#
WRSTR3     336#     347
WRSTRB      31       68#
WRSTRG      28      327#
WRSTX1     334      345#
```

APPENDIX
C-4

TIMEX COMPUTER CORPORATION

APPLICATION DEVELOPMENT LIBRARY

Application Software Component 004

DUAL SCREEN MODE

Date: 1/6/84

ASC Number: 004

Version: 001

Author: Carol Corcoran

Name: Dual Screen Mode Support

Description:

This component provides support to the application programmer for using the dual screen capability of the TS 2068. The services include opening/closing the second display file (moving the machine stack, OS RAM routines and BASIC structures), position control, clear screen and scroll screen services, and display of characters. In addition, services are provided to control which display file is active at the screen and which is the target of the current screen operation, as well as a Copy Service and an Exchange Service to transfer screen data/attributes within or between the two display files. "Get" services are provided to return the current display position, the character code for a specified display position, or the attribute byte for a specified display position.

For ease of use from BASIC, status is returned in the BC register pair, usually zero for successful completion and designated non-zero values for other conditions. The interface from BASIC is by means of POKE'ing the input parameters to designated RAM locations prior to invoking the service via the USR function. See page 4 of the code listing for the memory addresses to be used from BASIC with the support code loaded starting at Chunk 7 (E000H/57344).

Attribute and other display controls such as Inverse are taken from the standard TS2068 System Variables (see Usage Section.) The system variable VIDMOD is used to determine which display file is the target of the requested service.

Version Control

Version	Description	Date
001	Original	1/6/84

Application Services

Name: SETMODE (SETMDB from BASIC - parameter to VIMODE)

Input:

```
      MODE        0      =       Normal (Display File 1 only)
             128(80H)=           DF1 Active (DF2 Open)
                  1      =       DF2 Active
                  4      =       Screen Operations to DF1
                  5      =       Screen Operations to DF2
```

From Machine Code: Mode Parameter in A

From BASIC: Mode Parameter in VIMODE

Description:

Mode values of 0, 128 or 1 will cause an update of the video mode hardware and the opening or closing of the second display file as needed. This involves determining if there is enough free RAM to open the second display file and if so, moving the BASIC structures and machine language variables area up and the UDG (User-Defined Graphics) area down to make space for the machine stack and OS RAM routines at the top of memory. The second display file is cleared to zeroes. The affected system and internal variables are updated or initialized (see Usage Section). When returning to Mode 0 the structures are returned to their normal locations. In these modes the designated Display File is active at the screen and is the target of all screen operations.

The mode values of 4 and 5 do not affect the hardware, but are used to redirect screen operations to the desired display file. This permits building of a display file prior to activating it at the screen.

The screen position is set to 'home' (Line 0/Col.0) whenever SETMODE (SETMDB) is executed.

NOTE: All screen operations of the TS 2068 System BASIC Interpreter including program entry, system messages,

LIST, PRINT, PLOT, DRAW, etc. work only in Display File 1.

Name: CLRSCN (CLRSCB from BASIC - parameters to CLSCTL)

Input: Line Count (1-24)
        Starting Line Number (0-23)

From Machine Code: Line Count In Register B
                   Starting Line In Register C

From BASIC: Starting Line Number in CLSCTL
            Line Count in CLSCTL + 1

Description:

Clears to background color (PAPER) the designated number of lines, beginning with the Starting Line Number. Line 0 with a count of 24 clears the entire screen. Upon return, the cursor position is at the beginning of the first line cleared.

Output: BC = 0 for successful completion
        BC = 1 invalid parameters
               (Line Number + Line Count <1 or >24)

Name: SETCUR (SETCUB from BASIC - parameters to LINCOL)

Input: Line Number (0-23)
Column Number (0-31)

From Machine Code: Line Number In Register B
Column Number In Register C

From BASIC: Column Number In LINCOL
Line Number In LINCOL + 1

Description:

Converts the requested position to internal format, determines display file address, and stores the values for use by the next display character operation. Note that once established, the position is updated automatically when a character is displayed so that it is only necessary to set the position when sequential display is not desired.

NOTE: The screen position used and maintained by these service routines is independent of that used by the System ROM (S POSN).

Output: BC = 0 for successful completion
BC = 1 for invalid parameters (Line Number > 23 ,
Column Number > Line Length-1)

Name: WRCHR (WRCHB from BASIC - parameter to DATAB)

Input: Character code for character to be displayed

20H TO 7FH - Std. TS2068 Character Set
80H TO 8FH - Std. Graphics Set
90H TO A4H - User-Defined Graphics Set

From Machine Code: Register A

From BASIC: in DATAB

Description:

Displays character at current cursor position, applying current attributes and mask. Moves cursor position on to next sequential position. If character would start a new line after BOTLN (see Usage section) and the scroll count (variable SCRLCT) decrements to zero, the character will not be displayed and return will be made with BC = 3 (screen full). If the scroll count does not decrement to zero, the screen will be scrolled up one line using the information in SCRCTL and the new line started at the vacated line.

Output: BC = 0 for successful completion
BC = 1 invalid character code
BC = 3 for screen full

Name: WRSTRG (WRSTRB from BASIC - String Identifier in PARAMS)

Input: Character Code String

From machine code: Address of string in HL
Count in BC

From BASIC: String Variable Identifier in
System Variable PARAMS - 23747 (5CC3H)

Description:

Displays the characters from the string, beginning at the current cursor location and continuing sequentially until the count expires, or 'Screen Full' is detected (see WRCHR description and Usage Section on Automatic Scrolling). For the Screen Full condition, the remaining count is stored in the internal variable STRGCT for access by the user.

NOTE: Characters within the string which are outside of the supported range (32 through 164 (20H-A4H)) will be ignored. E.g., BASIC Token codes and control codes embedded in an INPUT string will not be displayed or decoded.

From BASIC, POKE the code for the string variable identifier into PARAMS prior to invoking WRSTRB, e.g.

```
0005  LET a$="-----string------"
0010  POKE 23747,CODE "a"
0015  IF USR (WRSTRB)<>0 THEN -----
         (continue)
```

Output: BC = 0 Successful
BC = 2 BASIC - String not found
BC = 3 Screen Full - Remaining Count in STRGCT
(HL=Current Address in String)

Name: SCROLL (SCRLB from BASIC - parameters to SCRCTL)

Input: Line Count (1-23)
Starting Line Number (1-23)

From Machine Code: Line Count In B
Starting Line In C
From BASIC: Starting Line In SCRCTL
Line Count In SCRCTL + 1

Description:

Scrolls the designated number of lines up 1 position, starting at the specified line number and inserts a blank line at the bottom of the scrolled area. Line 1 with a count of 23 will scroll the entire screen up 1 line. Upon return, the cursor position is at the beginning of the inserted blank line.

Note: See Usage Section on 'automatic' scrolling.

Output: BC = 0 Successful
BC = 1 Invalid Parameters
(Line Number + Line Count < 1 or > 24)

ASC Number: 004

Name: GTCHAR (GTCHRB from BASIC - parameters to GETCTL)

Input: Line/Column position as for SETCUR

From Machine Code: Line Number in B
Column Number in C

From BASIC: Column Number in GETCTL
Line Number in GETCTL + 1

Description:

Returns in register C of the BC register pair the character code for the character at the designated screen position. If no match against the character set (including the standard and user-defined graphics) is found, zero is returned. (Character code or zero also returned in A.)

Note: Positions 'printed' using the OVER technique will return zero if they do not match against any single character.

Output: BC = 0 for no find
BC = 1 invalid parameters
BC = character code (20h-A4H)

ASC Number: 004

Name: GETATT (GETATB from BASIC - parameters to GETCTL)

Input: As for GTCHAR

Description:

Returns in register C of the BC register pair the attribute byte for the character at the designated screen position.

Output: BC = 1 for invalid parameters
BC = attribute byte
Bit 7 - FLASH
Bit 6 - BRIGHT
Bit 5
Bit 4 - PAPER
Bit 3 /
Bit 2
Bit 1 - INK
Bit 0 /

ASC Number: 004

Name: GETCUR (GETCUB from BASIC)

Input: None

Description:

Returns in the BC register pair and in the BASIC parameter location LINCOL, the current print position (where the next character would be displayed).

```
Output:  B = Line number (0-23)
         C = Column number (0-31)

 BASIC:  LINCOL  -  Column number
         LINCOL + 1  -  Line number
```

NOTE: If the last character was printed at Col.31 of Line 23 (last position on the screen), then Col.0/Line 23 will be returned.

ASC Number: 004

Name: COPYSC (COPYSB from BASIC - string identifier in PARAM$)

Input:

```
               Source Line (0-23)
               Destination Line (0-23)
               Source Display File (1 or 2)
               Destination Display File (1 or 2)
               Line Count (1-24)

From Machine Code:    Source Line in B
                      Destination Line in C
                      Source DF in D
                      Dest.DF in E
                      Line Count in A
```

From BASIC: Parameters in string variable, separated by commas.
String Identifier in System Variable PARAM$ - 23747
(5CC3H)

Description:

Copies the designated portion of the source display file to the designated portion of the destination display file. The source and destination may be in the same display file. During a multi-line copy, source and destination operands are accessed in a top to bottom fashion, therefore, in certain cases of operand overlap the operation may be destructive,i.e. the source data may be modified before it is copied. To get the desired result, it may be necessary to copy individual lines.

From BASIC, the following example would copy lines 8 thru 20 from DF1 to lines 0 thru 12 in DF2:

```
      LET a$="8,0,1,2,13"        8=Starting Line
                                 0=Destination Line
                                 1=Source DF
                                 2=Dest.DF
                                13=Line Count

      POKE 23747,CODE "a"      (String Identifier to PARAM$)
      LET cc=USR (COPYSB)
      IF cc<>0 THEN.............
```

```
Output: BC=0  Successful
        BC=1  Invalid Parameters (DF<>1 or 2; Line No.<>0-23;
                                  Line+Count<>1-24
        BC=2  BASIC -  String Not Found
```

- -

Name: EXCHSC (EXCHSB from BASIC)

Input: Source '1' Display File (1 or 2)
Source '1' Line (0-23)
Source '2' Display File (1 or 2)
Source '2' Line (0-23)
Line Count (1-24)

From Machine Code: Source '1' DF in B
Source '1' Line in C
Source '2' DF in D
Source '2' Line in E
Line Count in A

From BASIC: Parameters in string variable, separated by commas, in the order Source '1' Line, Source '2' Line, Source '1' DF, Source '2' DF, Line Count. String Identifier in System Variable PARAM$ - 23747 (5CC3H)

Description:

Exchanges the specified number of lines between Source '1' and Source '2'. Both Sources may be in the same Display File. The exchange is done by XOR'ing the two sources together three times. The operation is done a line at a time, accessing the two sources in a top to bottom fashion, e.g. to exchange lines 8-12 in DF1 with lines 16-20 in DF2 would first exchange line 8 (DF1) with line 16 (DF2), then line 9 with line 17 and proceed in this fashion through exchange of line 12 with line 20.

From BASIC, the following example would exchange lines 0 thru 4 in DF1 with lines 8-12 in DF2:

```
      LET a$="0,8,1,2,5"        0=Source '1' Line
                                8=Source '2' Line
                                1=Source '1' DF
                                2=Source '2' DF
                                5=Line Count

      POKE 23747,CODE "a"       (String Identifier to PARAM$)
      LET cc=USR (EXCHSB)
      IF cc<>0 THEN .............
```

```
Output:        BC=0 Successful
      BC=1 Invalid Parameters (DF<>1 or 2: Line No.<>0-23:
                                        Line+Count <>1-24
      BC=2 BASIC - String Not Found
```

- -

- -

Usage:

Memory Usage:

This package of machine code routines includes the following internal variables:

Name	Size	Description
SCRCTL	2	Scroll Control LSB = Starting line number MSB = Number of lines to be scrolled
BOTLN	1	Bottom Line - Line number (0-23) after which test for scroll will be made.
SCRLCT	1	Scroll Count- Number of times + 1 that automatic scroll will be done. When decremented to zero, data will not be displayed and a condition code will be returned to user.
CHTBL	2	Character Table (Base Address-100H)
GRTBL	2	Std.Graphics Character Table (Base-100H)
LINLEN	1	Line Length
CURPOS	2	Current Position (Internal Format) LSB = Column Position MSB = Line Position
DFADDR	2	Current Display File Address
MASKB	1	Working Byte - (P FLAG Shifted Right 1) (bit 0 = OVER) (bit 2 = INVERSE) (bit 4 = INK Complement of PAPER (bit 6 = PAPER Complement of INK
ATTBYT	1	Working Byte - (Copy of ATTR P)
GTINDX	1	'Get' Index - Used by GTCHAR
STRGCT	2	String Count - Contains remaining byte count when BC=3 (Screen Full) is returned from the Write String service WRSTRG (WRSTRB).

ATTMSK	1	Working Byte - (Copy of MASK P)

Initial values set via SETMODE (SETMDB) when the second display file is first opened are as follows:

Variable Name	Value
SCRCTL	1701H
BOTLN	17H
SCRLCT	1H
CHTBL	3C00H
GRTBL	(Internal to Module)
LINLEN	20H
CURPOS	1821H
DFADDR	4000H/6000H
GTINDX	80H
STRGCT	0H

The following are the variables used for passing parameters in BASIC. The * indicates those initialized by SETMDB when the second display file is first opened:

Variable Name	Size	Value
* DATAB	1	0H
* LINCOL	2	0H
* CLRCTL	2	1800H
* GETCTL	2	0H
VIMODE	1	

In addition, VIDMOD, PARAMS and other system variables must be available to these routines. At minimum, chunks 0-3 and chunk 7 must be enabled in the Home Bank.

Location:

This package can be incorporated into a machine code program within the memory range from chunk 4 through 7, taking into consideration the remapping of certain structures when the second display file is open

NOTE: Machine code above RAMTOP is not moved.

Registers:

Other than as documented for output values, no claims are made as to preservation of any register contents except for the IY Register which must always contain the value 5C3AH for access to the standard system variables.

Automatic Scrolling:

As initialized, test for scrolling will be made when the print position goes to the next line following the bottom line on screen (BOTLN=23=24th line). Condition Code 3 (Screen Full) will be returned since SCRLCT will decrement to zero. If SCRLCT is set to some larger value, then the parameters in SCRCTL will be used to automatically scroll the designated number of lines beginning at the specified line number. As initialized, this will scroll the entire screen up. By performing a POKE or setting the variables BOTLN and SCRCTL to the desired values, automatic scrolling can be done using smaller sections of the screen. When working from BASIC it is recommended that BOTLN be set to Line 21 (15H) and SCRCTL+1 be set to 21 (15H) to avoid conflict with the Edit Line which uses the bottom two lines of the screen. Note that once SCRLCT expires, it will be set to 1. If a different value is desired, it must be reinitialized by the user after receiving the 'Screen Full' condition.

By setting the SCRCTL variable and invoking the SCROLL (SCRLB) routine any portion of the screen may be scrolled at any time.

Attribute Control:

Attribute and masking (Inverse/Over) control information will be taken from the system variables ATTR_P, MASK_P and P_FLAG as defined below. These variables contain the 'permanent' attribute controls set via the BASIC commands PAPER, INK, BRIGHT, FLASH, INVERSE, and OVER, or by directly writing to the specified locations.

NAME	ADDRESS	CONTENTS
ATTR_P	23693	Bit 7 - FLASH 6 - BRIGHT 5 4 - PAPER 3/ 2 1 - INK 0/
MASK_P	23694	SAME FORMAT AS ATTR_P. USED FOR 'TRANSPARENT' DISPLAY: For each bit that is set to 1, the corresponding information will be taken from the current screen position instead of from

		ATTR_P.
P_FLAG	23697	BIT 7 PAPER=COMPLEMENT OF INK 5 INK=COMPLEMENT OF PAPER 3 - INVERSE 1 - OVER (New Characters XOR'd with Old)

Using System ROM Screen Services:

The following technique can be used to build screens using the BASIC commands such as PRINT, PLOT, CIRCLE, and DRAW or other System ROM routines and get them into the second display file:

1. Set Mode 80 (opens 2nd DF)
2. Build Screen in DF1 using System or ADL Services
3. Copy DF1 to DF2 using COPYSC (COPYSB)
4. Set Mode 1 (DF2 to Screen)
5. Set Mode 4 (DF2 at Screen/Operations to DF1)
6. Build Screen in DF1 using System or ADL Services
7. Set Mode 80 (DF1 to Screen)
8. Go to Step 3

The switching of the screen from one display file to the other is transparent to the viewer where the files contain the same data.

ASC NUMBER: 004

WARNING

When the second display file is active at the screen, any system messages such as SCROLL?, error reports, or use of the INPUT command will not be visible and the system may appear to be "hung". Indiscriminately pressing keys may be filling the 'invisible' Edit Line with 'garbage' thus further aggrevating the situation. The ON ERR facility can be used to intercept some of these situations and set the video mode to use Display File 1 at the screen in order that the message can be seen and responded to. Otherwise, it is necessary to key in and execute from the Edit Line without being able to see it.

```
ADL - ASC 004 DUAL SCREEN MODE SUPPORT  CRZ80/11 version 10.36.14       16-Mar-84  12:47:30      Page 1
VERSION LEVEL CONTROL    IDDS.SRC

                 NAME ADL - ASC 004 DUAL SCREEN MODE SUPPORT
        ;
        ;
        ;
        ;
        ;
        ;
        ;
        ;
        ;                     **************************************
        ;                     *                                    *
        ;                     *               TIMEX                *
        ;                     * APPLICATION DEVELOPMENT LIBRARY    *
        ;                     *                                    *
        ;                     * NAME: DUAL SCREEN MODE SUPPORT     *
        ;                     *                                    *
        ;                     * ASC NO:  004                       *
        ;                     * VERSION: 001                       *
        ;                     * AUTHOR:  C. CORCORAN               *
        ;                     * DATE:    1/06/84                   *
        ;                     **************************************
```

APPENDIX
C-4

```
ADL - ASC 004 DUAL SCREEN MODE SUPPORT  CRZ80/11 version 10.36.14       16-Mar-84  12:47:30      Page 2
VERSION LEVEL CONTROL    IDDS.SRC

                 SUBTTL VERSION LEVEL CONTROL
        ;
        ;
        ;        VERSION          DATE            COMMENTS
        ;        -------          ----            --------
        ;
        ;          001            1/6/84          ORIGINAL
        ;
```

```
                          SUBTTL DEFINITIONS
                 ;
                 ;
                 ;
                 ;                            ****DEFINITIONS****
                 ;
                          INTERN  WRCHAR,WRSTRG,SETCUR,CLRSCN,SCROLL
                          INTERN  GTCHAR,GETATT,GETCUR
                          INTERN  WRCHRB,WRSTRB,SETCUB,CLRSCB,SCRLB
                          INTERN  GTCHRB,GETATB,GETCUB
                          INTERN  SETMODE,SETMDB
                          INTERN  COPYSC,COPYSB
                          INTERN  EXCHSC,EXCHSB
                 ;
=0018            SCRSZ            EQU     24        ; 24 LINES
=1701            SCINIT           EQU     1701H     ; SCROLL CONTROL INITIALIZATION
=1800            CLINIT           EQU     1800H     ; CLEAR SCREEN CTL. INIT.
=3C00            CHRSET           EQU     3C00H     ; ROM CHAR.TABLE-100H
=05E0'           GRPHST           EQU     ((GRPST)-100H) ;STD.GRAPHICS CHARS.
                 ;
=0E8E            CHNGVID          EQU     0E8EH     ; ROUTINE IN ROM EXTENSION
=1720            RECLEN           EQU     1720H     ; ROUTINE IN HOME ROM
=30F9            ININT            EQU     30F9H     ; ROUTINE IN HOME ROM
=3193            FP2A             EQU     3193H     ; ROUTINE IN HOME ROM
                 ;
=00FF            HREXPT           EQU     0FFH      ; HOME ROM EXT.SELECT PORT (BIT 7)
=00F4            DKHSPT           EQU     0F4H      ; DOCK HORIZONTAL SELECT PORT
                 ;
=5C4B            VARS             EQU     5C4BH     ; SYSTEM VARIABLES
=5C5D            CH_ADD           EQU     5C5DH     ;
=5C65            STKEND           EQU     5C65H     ;
=5C7B            UDG              EQU     5C7BH     ;
=5C7D            COORDS           EQU     5C7DH     ;
=5C8D            ATTR_P           EQU     5C8DH     ;
=5C8E            MASK_P           EQU     5C8EH     ;
=5C91            P_FLAG           EQU     5C91H     ;
=5CB2            RAMTOP           EQU     5CB2H     ;
=5CB4            PRAMT            EQU     5CB4H     ;
=5CC2            VIDMOD           EQU     5CC2H     ;
=5CC3            PARAMS           EQU     5CC3H     ; (LOCATION 23747)
=6840            DRIVES           EQU     6840H     ;
=12C0            INSERTSZ         EQU     7800H-DRIVES
=0840            MOVESZ           EQU     DRIVES-6000H
=F7C0            DEST7            EQU     0FFFFH-MOVESZ+1
=97C0            FIX              EQU     DEST7-6000H

=1000            FIXTBL           EQU     1000H
```

```
                          SUBTTL INPUTS AND ENTRIES
                 ;
                 ;
                 ;
                 ;
                 ;
                 ;
                 ;                 **PARAMETER INPUTS AND ENTRY POINTS FROM BASIC**
                 ;
                 ;                                                          WITH
                 ;                                                     MODULE LOADED
                 ;                                                     AT 57344(E000H)
                 ;                                                     DECIMAL ADDRESS
                 ;                                                     ---------------
0000'  20        DATAB            DEFB    20H      ; DATA BYTE FROM BASIC        57344
0001'  C3 0046'  WRCHRB:          JP      WRCH0    ; ENTRY TO WRITE CHARACTER    57345
0004'  C3 00EE'  WRSTRB:          JP      WRSTR0   ; ENTRY TO WRITE STRING       57348
                 ;                                 ; (see PARAMS above)
0007'  0000      LINCOL           DEFW     0       ; SET CURSOR PARAMETERS
                                                   ;   LINCOL=COL. (0-31)        57351
                                                   ;   LINCOL+1=LINE (0-23)      57352
0009'  C3 0117'  SETCUB:          JP      SETCB0   ; ENTRY TO SET CURSOR POSN.   57353
000C'  1800      CLRCTL           DEFW    1800H    ; CLEAR SCREEN CONTROLS
                                                   ;   CLRCTL=STARTING LINE NO.  57356
                                                   ;   CLRCTL+1=LINE COUNT       57357
000E'  C3 0104'  CLRSCB:          JP      CLRSB0   ; ENTRY TO CLEAR SCREEN       57358
0011'  0000      SPARE0           DEFW     0       ; NOT USED (ALIGNMENT ONLY)
0013'  0000      SPARE1           DEFW     0       ;
0015'  0000      SPARE2           DEFW     0       ;
0017'  0000      SPARE3           DEFW     0       ;
0019'  0000      GETCTL           DEFW     0       ; "GET" CONTROL FROM BASIC    57369
                                                   ; FORMAT IS AS FOR LINCOL
001B'  C3 025C'  GTCHRB:          JP      GTCHB0   ; ENTRY TO GET CHARACTER      57371
001E'  C3 020C'  GETATB:          JP      GETAB0   ; ENTRY TO GET ATTRIBUTE      57374
0021'  C3 02F1'  GETCUB:          JP      GETCB0   ; ENTRY TO GET CURSOR POSN.   57377
0024'  00        VIMODE           DEFB    0        ; VIDEO MODE CONTROL          57380
0025'  C3 0308'  SETMDB:          JP     STMDB0    ; ENTRY TO SET VIDEO MODE     57381
0028'  1701      SCRCTL           DEFW     1701H   ; SCROLL CONTROL
                                                   ;   SCRCTL=STARTING LINE NO.  57384
                                                   ;   SCRCTL+1=LINE COUNT       57385
002A'  C3 0127'  SCRLB:           JP      SCRLB0   ; ENTRY TO SCROLL             57386
                 ;
                 ;COPYSB                           ; ENTRY TO COPY FROM OF       57408
                 ;                                 ; (SEE NEXT PAGE)
                 ;EXCHSB                           ; ENTRY TO EXCHANGE SCREEN    57411
                 ;                                 ; (SEE NEXT PAGE)
                 ;
```

```
                              SUBTTL  OTHER VARIABLES
                   ;
                   ;
                   ;
                   ;
0020'  17          BOTLN           DEFB    17H     ; BOTTOM LINE (LINE AFTER       57389
                                                   ; WHICH SCREEN IS CONSIDERED
                                                   ; FULL.  AUTOMATIC SCROLL
                                                   ; WILL BE DONE IF SCRLCT
                                                   ; DOES NOT DECREMENT TO 0.
002E'  01          SCRLCT          DEFB    1       ; SCROLL COUNT - 1 PLUS NO.     57390
                                                   ; OF TIMES AUTOMATIC SCROLL
                                                   ; WILL BE DONE.
                   ;
                   ;
                   ;
                   ;
002F'  3C00        CHTBL           DEFW    CHRSET  ; ADDRESS OF CHARACTER TABLE   57391
                                                   ; (DEFAULTS TO TS2068 SYSTEM
                                                   ;  ROM)
0031'  0550'       GRTBL           DEFW    GRPHST  ; ADDRESS OF STD.GRAPHICS TBL.57393
0033'  20          LINLEN          DEFB    20H     ; LINE LENGTH (32)             57395
0034'  1821        CURPOS          DEFW    1821H   ; CURRENT POSITION (INTERNAL   57396
                                                   ;  FORMAT)
0036'  4000        DFADRS          DEFW    4000H   ; CURRENT DISPLAY FILE ADDRS. 57398
0038'  00          MASKB           DEFB    0       ; MASK TO BE APPLIED TO        57400
                                                   ; DISPLAY CHARACTERS
0039'  00          ATTBYT          DEFB    0H      ; CURRENT ATTRIBUTES           57401
                   ;
003A'  80          GTINDX          DEFB    80H     ; INDEX FOR ADJUSTING          57402
                                                   ; CH.CODE IN GTCHAR
003B'  0000        STRGCT          DEFW    0       ; REMAINING COUNT FROM WRSTRG
                   ;                               ; WHEN 'SCREEN FULL'           57403
003D'  0000        SPARE4          DEFW    0       ;                              57405
003F'  00          ATTMSK          DEFB    0       ; ATTRIBUTE MASK               57407
                   ;
0040'  C3 030A'    COPYSB          JP      COPYS0  ; BASIC ENTRY TO COPY OF       57408
0043'  C3 04F5'    EXCHSB          JP      EXCHS0  ; BASIC ENTRY TO EXCHANGE OF   57411
```

```
                              SUBTTL  WRITE CHARACTER
                   ;
                   ;
0046'              WRCH0:                          ; HERE FROM BASIC ENTRY TO DISPLAY THE
                                                   ; CHARACTER WHOSE CODE IS IN 'DATAB'
0046'  3A 0000'            LD   A,(DATAB)
                   ;
0049'              WRCHAR:                         ; ENTRY WITH CODE IN A
0049'  CD 06A2'            CALL  LDATTR            ; GET ATTRIBUTE AND MASK CONTROLS
                   ;
                   ;                               ; ENTRY TO USE ATTRIBUTE VALUES IN
                   ;                               ; INTERNAL VARIABLES WITHOUT RELOADING
004C'  CD 0650'    WRCH01: CALL  LDPOSN            ; LOAD REGISTERS FOR CURRENT POSITION
                                                   ;   BC=CURSOR POSITION FROM 'CURPOS'
                                                   ;   HL=DISPLAY FILE ADDRESS FROM 'DFADRS
                                                   ;   A=CODE FOR CHAR. TO BE DISPLAYED
004F'  FE 20               CP    20H               ; TEST VALID RANGE
0051'  DA 00C4'            JP    C,INVPAR          ; < 20H
0054'  FE A5               CP    0A5H              ;
0056'  D2 00C4'            JP    NC,INVPAR         ; > A4H
0059'  C5                  PUSH  BC                ; SAVE CURSOR POSITION
005A'  FE 80               CP    80H               ; TEST IF ASCII PRINTABLE (20H-7FH)
005C'  38 15               JR    C,WRCH12          ; YES
005E'  FE 90               CP    90H               ; TEST IF STD.GRAPHICS(80H-8FH)
0060'  38 09               JR    C,WRCH11
0062'  ED 4B 5C7B          LD    BC,(UDG)          ; USER-DEFINED GRAPHICS(90H-A4H)
0066'  05                  DEC   B                 ; ADJUST ADDRESS-100H
0067'  D6 70               SUB   70H               ; ADJUST FOR INDEX INTO TABLE
0069'  18 0C               JR    WRCH13
006B'  ED 4B 0031' WRCH11  LD    BC,(GRTBL)        ; ADDRESS OF GRAPHICS TABLE
006F'  D6 60               SUB   60H               ; ADJUST FOR INDEX INTO TABLE
0071'  18 04               JR    WRCH13
0073'  ED 4B 002F' WRCH12  LD    BC,(CHTBL)        ; CHARACTER TABLE
0077'  EB          WRCH13  EX    DE,HL             ; DE=POSN.IN DISPLAY FILE
0078'  26 00               LD    H,0
007A'  6F                  LD    L,A               ; CODE IS INDEX INTO TABLE
007B'  29                  ADD   HL,HL
007C'  29                  ADD   HL,HL
007D'  29                  ADD   HL,HL
007E'  09                  ADD   HL,BC             ; HL=PIXEL PATTERN IN TABLE
007F'  C1                  POP   BC
0080'  EB                  EX    DE,HL
0081'  79                  LD    A,C               ; TEST IF END OF LINE
0082'  3D                  DEC   A
0083'  3A 0033'            LD    A,(LINLEN)
0086'  20 05               JR    NZ,WRCH14
0088'  3C                  INC   A                 ; START OF NEW LINE
0089'  05                  DEC   B                 ; BUMP LINE NO.
008A'  4F                  LD    C,A               ; LINLEN+1=START OF LINE
008B'  18 01               JR    WRCH15
008D'  3C          WRCH14  INC   A
008E'  B9          WRCH15  CP    C                 ; TEST IF START OF LINE
```

```
008F'  D5                         PUSH  DE
0090'  CC 00C8'                   CALL  Z,TVFULQ          ; TEST IF OFF SCREEN
0093'  D1                         POP   DE
                                                          ; HERE TO PUT CHARACTER IN DISPLAY FILE
0094'  C5                 WRCH2   PUSH  BC                ; CURSOR POSITION
0095'  E5                         PUSH  HL                ; DISPLAY FILE ADRS.
0096'  3A 0038'                   LD    A,(MASKB)
0099'  06 FF                      LD    B,-1
009B'  1F                         RRA
009C'  38 01                      JR    C,WRCH3           ; IF XORING NEW INTO OLD
009E'  04                         INC   B                 ; B=-1 IF XORING  =0 IF NOT
009F'  1F                 WRCH3   RRA
00A0'  1F                         RRA
00A1'  9F                         SBC   A,A
00A2'  4F                         LD    C,A               ; C=-1 FOR INVERSE  =0 IF NOT
00A3'  3E 08                      LD    A,8               ; SCAN COUNT
00A5'  A7                         AND   A
00A6'  EB                         EX    DE,HL
00A7'  08                 WRCH5   EX    AF,AF'
00A8'  1A                         LD    A,(DE)            ; OLD BIT ROW
00A9'  A0                         AND   B
00AA'  AE                         XOR   (HL)
00AB'  A9                         XOR   C                 ; INVERT IF C=-1
00AC'  12                         LD    (DE),A            ; UPDATE DISPLAY FILE
00AD'  08                         EX    AF,AF'
00AE'  14                         INC   D                 ; NEXT SCAN
00AF'  23                         INC   HL                ; NEXT BYTE IN CHAR.FILE
00B0'  3D                         DEC   A                 ; TEST IF MORE SCANS
00B1'  20 F4                      JR    NZ,WRCH5
00B3'  15                 WRCH7   DEC   D                 ; ADJUST DF ADRS.
00B4'  EB                         EX    DE,HL             ; DF ADRS. TO HL
00B5'  CD 0665'                   CALL  UPDATT            ; UPDATE ATTRIBUTE BYTE
00B8'  E1                         POP   HL                ; STARTING ADDRESS
00B9'  C1                         POP   BC                ; CURSOR POSITION
00BA'  0D                         DEC   C                 ; ADJUST CURSOR POSITION
00BB'  23                         INC   HL                ; ADJUST DF ADDRESS
00BC'  CD 0655'           WRCHXT  CALL  STPOSN            ; STORE NEW POSITION
00BF'  0E 00              GOODRET LD    C,0               ; RETURN BC=0
00C1'  06 00              ERRRET  LD    B,0               ; ENTER HERE WITH C NON-ZERO
00C3'  C9                         RET
                          ;
00C4'  0E 01              INVPAR  LD    C,1               ; RETURN BC=1 FOR INVALID PARAMETERS
00C6'  18 F9                      JR    ERRRET
                          ;
00C8'  3E 18              TVFULQ  LD    A,SCRSZ           ; TEST IF NEW LINE IS OFF SCREEN
00CA'  90                         SUB   B                 ; A=LINE NO.
00CB'  57                         LD    D,A               ; SAVE IN D
00CC'  3A 002D'                   LD    A,(BOTLN) ; GET BOTTOM LINE
00CF'  BA                         CP    D
00D0'  D2 0628'                   JP    NC,UPDPOSN        ; ON SCREEN - RETURN TO WRITE CHAR.
                                                          ;  VIA UPDATE AND STORE POSITION
00D3'  3A 002E'                   LD    A,(SCRLCT)        ; TEST SCROLL COUNT
```

```
00D6'  3D                         DEC   A
00D7'  20 0B                      JR    NZ,TVFUL1         ; DO AUTOMATIC SCROLL USING SCRCTL
00D9'  3E 01                      LD    A,1               ; REINITIALIZE TO 1
00DB'  32 002E'                   LD    (SCRLCT),A
00DE'  C1                         POP   BC
00DF'  C1                         POP   BC                ; DISCARD RETURN TO WRITE CHAR.
00E0'  0E 03                      LD    C,3               ; RETURN BC=3 FOR SCREEN FULL
00E2'  18 DD                      JR    ERRRET
00E4'  32 002E'           TVFUL1  LD    (SCRLCT),A        ; UPDATE VARIABLE
00E7'  ED 4B 002B'                LD    BC,(SCRCTL)       ; GET SCROLL CONTROLS (STARTING LINE
                                                          ;   AND LINE COUNT)
00EB'  C3 0141'                   JP    SCRL0             ; RETURN TO WRITE CHAR. VIA SCROLL
                          ;
```

```
                              287            SUBTTL WRITE STRING
                              288     ;                                ; HERE FROM BASIC ENTRY TO
                              289     ;                                ; WRITE CHARACTER STRING TO SCREEN.
                              290     ;                                ; STRING IDENTIFIER (CH.CODE) IN
                              291     ;                                ; SYSTEM VARIABLE PARAMS AT 5CC3H
    00EE'  CD 0688'           292     WRSTR0  CALL GETSTRG             ; GET STRING VAR.ADRS. TO HL
    00F1'  C8                 293             RET  Z                   ; STRING NOT FOUND OR NULL STRING
                              294     ;                                ; (BC CONTAINS STATUS)
                              295     ;
                              296     ;                                ; ENTRY FROM MACHINE CODE WITH
                              297     ;                                ; ADDRESS OF CHAR.CODE 'STRING'
                              298     ;                                ; IN HL AND LENGTH IN BC
                              299     ;
    00F2'  CD 06A2'           300     WRSTRG: CALL  LDATTR             ; GET ATTRIBUTE AND MASK CONTROLS
    00F5'  7E                 301     WRSTLP  LD    A,(HL)             ; GET CODE
    00F6'  E5                 302             PUSH  HL                 ; SAVE ADDRESS
    00F7'  C5                 303             PUSH  BC                 ; AND COUNT
    00F8'  CD 004C'           304             CALL  WRCH01             ; WRITE 'A'
    00FB'  79                 305             LD    A,C                ; TEST IF GOOD
    00FC'  B0                 306             OR    B
    00FD'  20 09              307             JR    NZ,WRSTX1          ; EXIT IF INVALID CODE OR
                              308     ;                                ; IF SCREEN FULL
    00FF'  C1                 309     WRSTR3  POP   BC                 ; COUNT
    0100'  E1                 310             POP   HL                 ; ADDRESS
    0101'  23                 311             INC   HL                 ; NEXT CHAR.
    0102'  0B                 312             DEC   BC                 ; ADJUST COUNT
    0103'  78                 313             LD    A,B                ; TEST IF DONE
    0104'  B1                 314             OR    C
    0105'  20 EE              315             JR    NZ,WRSTLP          ; WRITE NEXT CHAR.
    0107'  C9                 316             RET                      ; RETURN BC=0
                              317     ;
    0108'  79                 318     WRSTX1  LD    A,C                ; SAVE ERROR
    0109'  FE 01              319             CP    1                  ; TEST IF UNRECOGNIZED CODE
    010B'  28 F2              320             JR    Z,WRSTR3           ; CONTINUE
    010D'  E1                 321             POP   HL                 ; REMAINING COUNT TO HL
    010E'  22 0035'           322             LD    (STRGCT),HL        ; STORE REMAINING COUNT
    0111'  E1                 323             POP   HL                 ; ADDRESS TO HL
    0112'  0E 03              324             LD    C,3                ; RETURN BC=3
    0114'  06 00              325     WRSTX2  LD    B,0
    0116'  C9                 326             RET
                              327     ;
```

```
                              329            SUBTTL POSITION CONTROL
                              330     ;
    0117'                     331     SETCB0:                          ; HERE FROM BASIC ENTRY.  PARAMETERS
                              332                                      ; IN LINCOL
    0117'  ED 4B 0007'        333             LD   BC,(LINCOL)
                              334     ;
    011B'                     335     SETCUR:                          ; ENTRY WITH LINE/COL. IN BC REG.
    011B'  CD 060C'           336             CALL     TSTPAR          ; TEST PARAMETERS FOR VALIDITY
    011E'  CD 061D'           337             CALL     CONVFM          ; CONVERT TO INTERNAL FORMAT
    0121'  CD 0623'           338             CALL     UPDPOSN         ; CALCULATE AND STORE POSITION
    0124'  C3 008F'           339             JP       GOODRET         ; RETURN BC=0
                              340     ;
```

```
                              342            SUBTTL SCROLL
                              343     ;
                              344     ;
                              345     ;
    0127'                     346     SCRLB0:                          ; HERE FROM BASIC ENTRY TO SCROLL
                              347     ;                                ; SCREEN
    0127'  ED 4B 002B'        348             LD   BC,(SCRCTL)         ; GET CONTROL INFO.
                              349     ;
    012B'                     350     SCROLL:                          ; HERE WITH CONTROLS IN BC
                              351                                      ;  B=NO. OF LINES
                              352                                      ;  C=STARTING LINE NO.
    012B'  78                 353             LD   A,B                 ; TEST VALIDITY
    012C'  A7                 354             AND  A                   ;
    012D'  CA 00C4'           355             JP   Z,INVPAR            ; ERROR IF COUNT=0
    0130'  81                 356             ADD  A,C
    0131'  FE 01              357             CP   1
    0133'  DA 00C4'           358             JP   C,INVPAR            ; ERROR IF B+C<1
    0136'  FE 19              359             CP   25
    0138'  D2 00C4'           360             JP   NC,INVPAR           ; ERROR IF B+C>24
    013B'  CD 0141'           361             CALL  SCRL0              ; DO SCROLL
    013E'  C3 008F'           362             JP    GOODRET            ; RETURN BC=0
                              363     ;
    0141'  C5                 364     SCRL0   PUSH  BC
    0142'  3E 18              365             LD    A,SCRSZ            ; GET STARTING LINE IN INTERNAL FORMAT
    0144'  91                 366             SUB   C
    0145'  47                 367             LD    B,A
    0146'  3A 0033'           368             LD    A,(LINLEN)
    0149'  3C                 369             INC   A                  ; COL. 0
    014A'  4F                 370             LD    C,A
    014B'  CD 063A'           371             CALL  LNBU
    014E'  C1                 372             POP   BC
    014F'  E5                 373             PUSH  HL                 ; SAVE STARTING ADRS.
    0150'  C5                 374             PUSH  BC                 ; SAVE ORIG.BC FOR EXIT
    0151'  7D                 375     TESTAD  LD    A,L                ; TEST IF AT START OF BLOCK
    0152'  A7                 376             AND   A
    0153'  28 3C              377             JR    Z,STBLK            ; YES
    0155'  07                 378             RLCA
    0156'  07                 379             RLCA
    0157'  07                 380             RLCA
    0158'  4F                 381             LD    C,A                ; GET NO. OF LINES THIS BLOCK
    0159'  3E 08              382             LD    A,8
    015B'  91                 383             SUB   C
    015C'  B8                 384             CP    B                  ; TEST AGAINST TOTAL LINES
    015D'  38 4A              385             JR    C,GRBLK            ; TOTAL GREATER THAN THIS BLOCK
    015F'  78                 386     INSOBLK LD    A,B
    0160'  06 00              387             LD    B,0                ; REMAINING COUNT
    0162'  C5                 388             PUSH  BC
    0163'  47                 389     LOOP    LD    B,A                ; B=LINES THIS BLOCK
    0164'  0E 08              390             LD    C,8                ; C=SCAN COUNT
    0166'  78                 391     LOOP0   LD    A,B
    0167'  C5                 392             PUSH  BC                 ; SAVE SCAN COUNT
    0168'  0F                 393             RRCA
    0169'  0F                          RRCA
    016A'  0F                          RRCA                    ; CALCULATE NO. OF BYTES
    016B'  4F                          LD    C,A
    016C'  06 00                       LD    B,0               ; BC=32*# OF LINES
    016E'  EB                  LOOP1   EX    DE,HL
    016F'  21 FFE0                     LD    HL,-20H           ; GET ADRS. OF PREV. LINE
    0172'  19                          ADD   HL,DE
    0173'  EB                          EX    DE,HL             ; TO DE
    0174'  E5                          PUSH  HL                ; DISPLAY FILE ADRS.
    0175'  ED B0                       LDIR                    ; DO MOVE
    0177'  E1                          POP   HL
    0178'  24                          INC   H                 ; NEXT SCAN LINE
    0179'  C1                          POP   BC                ; SCAN COUNT
    017A'  0D                          DEC   C
    017B'  20 E9                       JR    NZ,LOOP0          ; MORE SCANS
    017D'  C1                          POP   BC                ; RESIDUAL LINE COUNT
    017E'  78                          LD    A,B
    017F'  A7                          AND   A
    0180'  28 04                       JR    Z,SCRLXT          ; DONE
    0182'  2E 00                       LD    L,0               ; START OF NEXT BLOCK
    0184'  18 CB                       JR    TESTAD            ; DO REMAINING LINE(S)
    0186'  C1                  SCRLXT  POP   BC                ; ORIG.BC
    0187'  D1                          POP   DE                ; STARTING ADRS. TO DE
    0188'  C5                          PUSH  BC                ; SAVE ORIG.BC
    0189'  68                          LD    L,B               ; NO. OF LINES SCROLLED
    018A'  26 00                       LD    H,0               ;
    018C'  29                          ADD   HL,HL             ; 32*NO. OF LINES=
    018D'  29                          ADD   HL,HL             ; NO. OF ATTRIBUTE BYTES
    018E'  29                          ADD   HL,HL             ; TO BE SCROLLED
    018F'  29                          ADD   HL,HL             ;
    0190'  29                          ADD   HL,HL             ;
    0191'  44                          LD    B,H               ; COUNT TO BC
    0192'  4D                          LD    C,L               ;
    0193'  62                          LD    H,D               ; ADRS. TO HL
    0194'  6B                          LD    L,E               ;
    0195'  CD 0692'                    CALL  CALCATT           ; ATTRIBUTE ADRS. TO HL
    0198'  EB                          EX    DE,HL             ;
    0199'  21 FFE0                     LD    HL,-20H           ; ADRS. OF PREV.ATTR.BYTE
    019C'  19                          ADD   HL,DE             ;
    019D'  EB                          EX    DE,HL             ; PREV.BYTE DE
    019E'  ED B0                       LDIR                    ; SCROLL ATTRIBUTES
    01A0'  C1                          POP   BC                ; ORIG. BC
    01A1'  79                          LD    A,C               ; STARTING LINE
    01A2'  80                          ADD   A,B               ; ADD NO. OF LINES MOVED
    01A3'  3D                          DEC   A                 ; LAST LINE SCROLLED
    01A4'  4F                          LD    C,A
    01A5'  06 01                       LD    B,1               ; CLEAR 1 LINE
    01A7'  18 45                       JR    CLRSC0            ; CLEAR VACATED LINE AND RETURN
                               ;
    01A9'  4F                  GRBLK   LD    C,A
    01AA'  78                          LD    A,B
    01AB'  91                          SUB   C                 ; ADJUST TOTAL LINE COUNT BY NO.
```

```
    01AC'  47                          LD    B,A               ; OF LINES THIS BLOCK
    01AD'  C5                          PUSH  BC
    01AE'  79                          LD    A,C               ; LOAD A NO. OF LINES THIS BLOCK
    01AF'  18 B2                       JR    LOOP
                               ;
    01B1'  05                  STBLK   DEC   B                 ; ADJUST TOTAL LINE COUNT-1
    01B2'  C5                          PUSH  BC
    01B3'  0E 08                       LD    C,8               ; SCAN COUNT
    01B5'  C5                  STBLK0  PUSH  BC                ; SAVE SCAN COUNT
    01B6'  EB                  STBLK1  EX    DE,HL
    01B7'  21 F8E0                     LD    HL,-720H
    01BA'  19                          ADD   HL,DE
    01BB'  EB                          EX    DE,HL             ; ADRS. OF PREV. LINE
    01BC'  01 0020                     LD    BC,32             ; BYTE COUNT
    01BF'  E5                          PUSH  HL
    01C0'  ED B0                       LDIR                    ; DO MOVE
    01C2'  E1                          POP   HL
    01C3'  24                          INC   H                 ; TO NEXT SCAN LINE
    01C4'  C1                          POP   BC
    01C5'  0D                          DEC   C                 ; TEST IF MORE SCANS
    01C6'  20 ED                       JR    NZ,STBLK0
    01C8'  C1                          POP   BC                ; REMAINING LINE COUNT
    01C9'  78                          LD    A,B
    01CA'  A7                          AND   A
    01CB'  28 B9                       JR    Z,SCRLXT
    01CD'  11 F820                     LD    DE,-7E0H          ; ADJUST TO LINE 1
    01D0'  19                          ADD   HL,DE
    01D1'  C3 0151'                    JP    TESTAD            ; BC=LINE COUNT
                                                               ; HL=DF ADDRESS
                               ;
```

```
                                  SUBTTL  CLEAR SCREEN
                         ;
                         ;
  01D4'                  CLRSB0:                              ; HERE FROM BASIC ENTRY TO CLEAR SCREEN
  01D4'   ED 4B 000C'             LD    BC,(CLRCTL)           ; GET CONTROL INFO.
                         ;
  01D8'                  CLRSCN:                              ; ENTRY WITH BC=LINE COUNT AND
                                                              ; STARTING LINE NO. FOR CLEAR
  01D8'   78                      LD    A,B
  01D9'   A7                      AND   A                     ; TEST VALIDITY
  01DA'   CA 00C4'                JP    Z,INVPAR              ; ERROR IF COUNT=0
  01DD'   81                      ADD   A,C
  01DE'   FE 01                   CP    1
  01E0'   DA 00C4'                JP    C,INVPAR              ; ERROR IF B+C<1
  01E3'   FE 19                   CP    25
  01E5'   D2 00C4'                JP    NC,INVPAR             ; ERROR IF B+C>24
  01E8'   CD 01EE'                CALL  CLRSC0                ; DO SERVICE
  01EB'   C3 00BF'                JP    GOODRET               ; RETURN BC=0
                         ;
                         ;
  01EE'   CD 06A2'       CLRSC0: CALL  LDATTR                 ; GET ATTRIBUTE CTL
  01F1'   C5                      PUSH  BC
  01F2'   3E 18                   LD    A,SCRSZ               ; CONVERT TO INTERNAL FORMAT
  01F4'   91                      SUB   C
  01F5'   47                      LD    B,A
  01F6'   3A 0033'                LD    A,(CLINLEN)
  01F9'   3C                      INC   A                     ; SET TO COL.0
  01FA'   4F                      LD    C,A
  01FB'   CD 063A'                CALL  LNBU                  ; GET ADDRESS
  01FE'   50                      LD    D,B
  01FF'   59                      LD    E,C                   ; SAVE POSITION
  0200'   C1                      POP   BC                    ; ORIG. BC
  0201'   D5                      PUSH  DE                    ; SAVE CURSOR POSITION
  0202'   7D             CLRSC1   LD    A,L                   ; GET # OF LINES THIS BLOCK
  0203'   07                      RLCA
  0204'   07                      RLCA
  0205'   07                      RLCA
  0206'   4F                      LD    C,A
  0207'   3E 08                   LD    A,8
  0209'   91                      SUB   C
  020A'   B8                      CP    B                     ; COMPARE TO TOTAL LINE COUNT
  020B'   38 47                   JR    C,CLRSC7
  020D'   78             CLRSC2   LD    A,B                   ; NO. OF LINES
  020E'   06 00                   LD    B,0                   ; REMAINING LINES
  0210'   C5                      PUSH  BC
  0211'   47             CLRSC3   LD    B,A
  0212'   0E 08                   LD    C,8                   ; SCAN COUNT
  0214'   78             CLRSC4   LD    A,B
  0215'   C5                      PUSH  BC
  0216'   E6 07                   AND   7
  0218'   0F                      RRCA
  0219'   0F                      RRCA
```

```
  021A'   0F                      RRCA
  021B'   4F                      LD    C,A                   ; BC=32*NO. OF LINES
  021C'   06 00                   LD    B,0                   ; (=0 IF 256 FOR 8 LINES)
  021E'   0D                      DEC   C                     ; ADJUST
  021F'   E5             CLRSC5   PUSH  HL
  0220'   54                      LD    D,H
  0221'   5D                      LD    E,L
  0222'   36 00                   LD    (HL),00               ; CLEAR DF
  0224'   13                      INC   DE
  0225'   ED B0                   LDIR
  0227'   E1                      POP   HL
  0228'   24                      INC   H                     ; NEXT SCAN ROW
  0229'   C1                      POP   BC                    ; POP SCAN COUNT
  022A'   0D                      DEC   C
  022B'   20 E7                   JR    NZ,CLRSC4
  022D'   E5                      PUSH  HL                    ; SAVE NEXT DF ADRS.
  022E'   25                      DEC   H                     ; LAST SCAN ROW
  022F'   CD 0692'                CALL  CALCATT               ; GET ADRS. IN ATTRIBUTE FILE
  0232'   78                      LD    A,B                   ; NO. OF LINES THIS BLOCK
  0233'   E6 07                   AND   7
  0235'   0F                      RRCA
  0236'   0F                      RRCA
  0237'   0F                      RRCA
  0238'   4F                      LD    C,A                   ; BC=32*NO. OF LINES
  0239'   06 00                   LD    B,0
  023B'   0D                      DEC   C                     ; ADJUST
  023C'   54                      LD    D,H
  023D'   5D                      LD    E,L
  023E'   3A 0039'                LD    A,(ATTBYT)            ; ATTRIBUTE VALUE
  0241'   77                      LD    (HL),A                ; UPDATE ATTRIBUTE FILE
  0242'   13                      INC   DE                    ; NEXT BYTE
  0243'   ED B0                   LDIR                        ;
  0245'   E1                      POP   HL                    ; DF ADRS.(LAST SCAN+100H)
  0246'   C1                      POP   BC                    ; TOTAL LINE COUNT
  0247'   78                      LD    A,B
  0248'   A7                      AND   A
  0249'   28 05                   JR    Z,CLRSXT
  024B'   2E 00                   LD    L,0                   ; HL=START OF NEXT BLOCK
  024D'   C3 0202'                JP    CLRSC1                ; B=REMAINING LINE COUNT
  0250'   C1             CLRSXT   POP   BC                    ; POSITION
  0251'   C3 0628'                JP    UPDPOSN               ; RETURN VIA UPDATE AND STORE POSITION
  0254'   4F             CLRSC7   LD    C,A                   ; SAVE NO. LINES THIS BLOCK
  0255'   78                      LD    A,B
  0256'   91                      SUB   C                     ; ADJUST TOTAL LINE COUNT
  0257'   47                      LD    B,A
  0258'   C5                      PUSH  BC                    ; REMAINING LINE COUNT
  0259'   79                      LD    A,C                   ; LINES THIS BLOCK
  025A'   18 B5                   JR    CLRSC3                ;
```

```
                            SUBTTL "GET" ROUTINES
                    ;
                    ;
0025C'              GTCHB0:                         ; HERE FROM BASIC ENTRY TO GET CHARACTER
                                                    ; (RETURNS CODE FOR CHARACTER AT
                                                    ;  POSITION SPECIFIED IN GETCTL)
025C'   ED 4B 0019'                 LD   BC,(GETCTL)      ; GET CONTROL INFO.
                    ;
0260'               GTCHAR:                         ; ENTRY WITH POSITION IN BC
0260'   CD 060C'            CALL TSTPAR             ; TEST PARAMETERS
0263'   CD 061D'            CALL CONVFM             ; CONVERT TO INTERNAL FORMAT
0266'   CD 062D'            CALL CALCPOS            ; GET DISPLAY FILE ADRS.
0269'   ED 5B 002F'         LD   DE,(CHTBL)         ; CHAR.TABLE
026D'   06 60               LD   B,96               ; NO. OF PRINTABLE CHARACTERS
026F'   3E 80               LD   A,80H              ; SET ADJUSTMENT INDEX
0271'   32 003A'    GTCH1   LD   (GTINDX),A
0274'   14                  INC  D                  ; ADJUST TO START OF TABLE
0275'   EB                  EX   DE,HL              ; DF ADRS.IN DE;CHAR.SET IN HL
0276'   C5          GTCH2   PUSH BC                 ; SAVE COUNT
0277'   D5                  PUSH DE                 ; SAVE ADRS. IN DF
0278'   E5                  PUSH HL                 ; SAVE ADRS. IN CHAR.TABLE
0279'   1A                  LD   A,(DE)             ; SCAN ROW FROM DF
027A'   AE                  XOR  (HL)               ; TEST AGAINST CHAR. SET
027B'   28 10               JR   Z,GTCH3            ; MATCH
027D'   F5                  PUSH AF
027E'   3A 003A'            LD   A,(GTINDX)
0281'   FE 90               CP   90H                ; TEST IF STD.GRAPHICS
0283'   20 03               JR   NZ,GTCH23
0285'   F1                  POP  AF
0286'   18 27               JR   GTCH4              ; DO NOT TEST FOR INVERSE
0288'   F1          GTCH23  POP  AF
0289'   3C                  INC  A                  ; TEST INVERSE
028A'   20 23               JR  NZ,GTCH4
028C'   3D                  DEC  A                  ; A=-1 FOR INVERSE
028D'   4F          GTCH3   LD   C,A                ; C=0 FOR MATCH  -1 FOR INVERSE
028E'   06 07               LD   B,7
0290'   14          GTCH31  INC  D                  ; NEXT SCAN IN DF
0291'   23                  INC  HL                 ; NEXT BYTE IN CHAR.SET
0292'   1A                  LD   A,(DE)
0293'   AE                  XOR  (HL)
0294'   A9                  XOR  C
0295'   20 18               JR   NZ,GTCH4               ; NO MATCH
0297'   10 F7               DJNZ GTCH31      ; FOR NEXT SCAN
                                             ;
                                             ; HERE IF MATCH WITH (SP)=CHAR IN CHAR SET
                                             ; (SP+2)=CHAR.IN DISPLAY FILE (SP+5)=CHAR.
                                             ; COUNT
0299'   79                  LD   A,C         ; A=-1 IF MATCH ON INVERSE
029A'   C1                  POP  BC
029B'   C1                  POP  BC
029C'   C1                  POP  BC
029D'   4F                  LD   C,A         ; B=COUNT C=-1 IF MATCH ON INVERSE
```

```
029E'   3A 003A'            LD   A,(GTINDX)          ; ADJUST CHAR.CODE
02A1'   90                  SUB  B          ; A=CHAR.CODE
02A2'   FE 20               CP   20H        ; TEST IF SPACE
02A4'   20 05               JR   NZ,GTCH32
02A6'   0C                  INC  C          ; TEST IF MATCH ON INVERSE SPACE
02A7'   20 02               JR   NZ,GTCH32
02A9'   3E 8F               LD   A,8FH      ; SET CODE FOR GRAPHICS BLOCK
02AB'   4F          GTCH32  LD   C,A
02AC'   06 00               LD   B,0
02AE'   C9                  RET             ; CHAR.CODE IN A AND IN BC
                    ;
02AF'   E1          GTCH4   POP  HL         ; HERE WHEN NO MATCH
02B0'   11 0008             LD   DE,8       ; LOOK AT NEXT CHAR. IN SET
02B3'   19                  ADD  HL,DE             ; CHAR. SET
02B4'   D1                  POP  DE                ; CHAR. IN DF
02B5'   C1                  POP  BC                ; CHAR.COUNT
02B6'   10 BE               DJNZ GTCH2      ; LOOK AGAIN
                                            ;
                                            ; HERE TO TEST IF DONE
02B8'   EB                  EX   DE,HL      ; DF ADRS.TO HL
02B9'   3A 003A'            LD   A,(GTINDX)
02BC'   FE 80               CP   80H        ; TEST IF STD.CHR.SET
02BE'   20 0A               JR   NZ,GTCH5   ; TRY GRAPHICS
02C0'   ED 5B 0031'         LD   DE,(GRTBL); STD.GRAPHICS TABLE
02C4'   06 10               LD   B,16       ; NO. OF ENTRIES
02C6'   3E 90               LD   A,90H      ; INDEX
02C8'   18 A7               JR   GTCH1      ;
02CA'   FE 90       GTCH5   CP   90H        ; TEST IF STD.GRAPHICS
02CC'   20 08               JR   NZ,GTCH6   ; DONE IF NOT
02CE'   ED 5B 5C7B          LD   DE,(UDG)   ; TRY USER-DEFINED GRAPHICS AREA
02D2'   15                  DEC  D          ; ADJUST ADDRESS-100H
02D3'   06 15               LD   B,21       ; NO OF ENTRILS
02D5'   3E A5               LD   A,0A5H     ; INDEX
02D7'   18 98               JR   GTCH1
02D9'   48          GTCH6   LD   C,B        ; HERE WHEN NO MATCH ANYWHERE
02DA'   AF                  XOR  A          ; SET BC AND A=ZERO
02DB'   C9                  RET

                                            ; GET ATTRIBUTE BYTE
                    ;                       ; HERE FROM BASIC ENTRY TO GET ATTRIBUTE
                    ;
02DC'   ED 4B 0019' GETAB0: LD   BC,(GETCTL)
                    ;                       ; HERE WITH LIN/COL IN BC
                    ;
02E0'   CD 060C'    GETATT: CALL  TSTPAR    ; TEST PARAMETERS
02E3'   CD 061D'            CALL  CONVFM    ; CONVERT TO INTERNAL FORMAT
02E6'   CD 062D'            CALL  CALCPOS   ; CALCULATE DF POSITION
02E9'   CD 0692'            CALL  CALCATT   ; CALCULATE ATTRIBUTE POSITION
02EC'   7E                  LD    A,(HL)    ; ATTRIBUTE BYTE TO A
02ED'   4F                  LD    C,A       ; PASS BACK IN BC
02EE'   06 00               LD    B,0
02F0'   C9                  RET
```

```
                    ;                                  ; GET CURSOR POSITION
    02F1'           GETCB0:                            ; HERE FROM BASIC ENTRY
    02F1'           GETCUR:
    02F1'  ED 4B 0034'        LD   BC,(CURPOS)         ; GET INTERNAL POSITION
    02F5'  CD 0610'           CALL CONVFM              ; CONVERT TO USER FORMAT
    02F8'  3A 0033'           LD   A,(LINLEN)
    02FB'  B9                 CP   C                   ; TEST IF END OF LINE(=32)
    02FC'  20 08              JR   NZ,GETC1            ; NO
    02FE'  0E 00              LD   C,0                 ; NEXT POSN.START OF NEXT LINE
    0300'  78                 LD   A,B
    0301'  3C                 INC  A                   ; BUMP TO NEXT LINE
    0302'  47                 LD   B,A
    0303'  FE 18              CP   24                  ; TEST IF OFF SCREEN
    0305'  38 02              JR   C,GETC1             ; NO
    0307'  06 17              LD   B,23                ; POSN. IS AT BOTTOM LINE
    0309'  ED 43 0007'  GETC1 LD   (LINCOL),BC         ; STORE FOR BASIC PROGRAM
    030D'  C9                 RET                      ; VALUES ALSO IN BC
                    ;
```

```
                              SUBTTL  VIDEO MODE CONTROL
                    ;
                    ;
    030E'           STMDB0:                          ; HERE FROM BASIC ENTRY WITH MODE IN
                                                     ; 'VIMODE'
    030E'  3A 0024'           LD   A,(VIMODE)
                    ;
    0311'           SETMODE:                         ; ENTRY WITH MODE IN A
                    ;
    0311'  47                 LD   B,A           ; MODE TO B
    0312'  A7                 AND  A
    0313'  28 15              JR   Z,SETMD0      ; TEST FOR VALIDITY
    0315'  FE 80              CP   80H           ;
    0317'  28 11              JR   Z,SETMD0      ;
    0319'  FE 01              CP   1
    031B'  28 0D              JR   Z,SETMD0
    031D'  FE 04              CP   4
    031F'  CA 038A'           JP   Z,PRFV        ; HANDLE 4 AND 5
    0322'  FE 05              CP   5
    0324'  CA 038A'           JP   Z,PRFV        ;
    0327'  C3 00C4'           JP   INVPAR        ; INVALID PARAMETER
    032A'  3A 5CC2      SETMD0 LD  A,(VIDMOD) ; TEST CURRENT MODE
    032D'  A7                 AND  A
    032E'  20 5A              JR   NZ,SETMD2     ; DF2 OPEN
    0330'  B0                 OR   B             ; CURRENT MODE=0 - TEST IF NEW MODE=0
    0331'  CA 008F'           JP   Z,GOODRET     ; NO ACTION
                    ;
                    ;                            ; INITIAL OPENING OF 2ND DF
    0334'  21 1701      SETMD1 LD  HL,SCINIT     ; INITIALIZE VARIABLES
    0337'  22 002B'           LD   (SCRCTL),HL ; SCROLL CONTROL
    033A'  3E 17              LD   A,23          ;
    033C'  32 002D'           LD   (BOTLN),A     ; BOTTOM LINE
    033F'  3E 01              LD   A,1           ;
    0341'  32 002E'           LD   (SCRLCT),A ; SCROLL COUNT
    0344'  3E 20              LD   A,32          ;
    0346'  32 0033'           LD   (LINLEN),A ; LINE LENGTH
    0349'  21 1800            LD   HL,CLINIT     ;
    034C'  22 000C'           LD   (CLRCTL),HL ; CLEAR SCREEN CONTROL
    034F'  AF                 XOR  A
    0350'  32 003B'           LD   (STRGCT),A ; WRSTRG REMAINING COUNT
    0353'  32 003C'           LD   (STRGCT+1),A ;
    0356'  21 3C00            LD   HL,CHRSET     ; STD.CHAR.SET
    0359'  22 002F'           LD   (CHTBL),HL ;
    035C'  21 05E0'           LD   HL,GRPHST     ; STD. GRAPHICS SET
    035F'  22 0031'           LD   (GRTBL),HL ;
                    ;                            ;
                    ;                            ; INITIALIZE BASIC INPUTS
    0362'  32 0000'           LD   (DATAB),A     ; DATA BYTE
    0365'  32 0007'           LD   (LINCOL),A ; COLUMN
    0368'  32 0008'           LD   (LINCOL+1),A ; LINE
    036B'  32 0019'           LD   (GETCTL),A ; 'GET' COLUMN
    036E'  32 001A'           LD   (GETCTL+1),A ; 'GET' LINE
```

```
                    ;                         ; TEST IF ENOUGH MEMORY
0371'  21 12C0                LD    HL,INSERTSZ
0374'  11 0840                LD    DE,MOVESZ
0377'  19                     ADD   HL,DE     ; HL=TOTAL ROOM NEEDED
0378'  ED 5B 5C65             LD    DE,(STKEND)
037C'  19                     ADD   HL,DE     ; ADD MEMORY IN USE
037D'  DA 03B5'               JP    C,EXTNRM  ; NOT ENOUGH MEMORY TO OPEN DF2
0380'  ED 5B 5CB2             LD    DE,(RAMTOP)
0384'  A7                     AND   A
0385'  ED 52                  SBC   HL,DE
0387'  D2 03B5'               JP    NC,EXTNRM ; NOT ENOUGH MEMORY
038A'  78           SETMD2    LD    A,B       ; MODE TO A
038B'  CD 05F3'               CALL  ENBLEXT   ; ENABLE ROM EXT.
038E'  CD 05CD'               CALL  GETVAL    ; H/W VALUE TO B; VIDMOD VALUE TO C
0391'  C5                     PUSH  BC        ; SAVE
0392'  78                     LD    A,B
0393'  A7                     AND   A         ; TEST IF 0
0394'  20 01                  JR    NZ,SETM21
0396'  79                     LD    A,C       ; VALUE FOR CHNGVID IN C
0397'  CD 0E8E      SETM21    CALL  CHNGVID   ; CALL RTN. TO OPEN/CLOSE 2ND DF
039A'  CD 0600'               CALL ENBLHOME   ; REENABLE HOME BANK
039D'  C1                     POP   BC
039E'  79                     LD    A,C
039F'  32 5CC2      SETMD3    LD    (VIDMOD),A; UPDATE VIDMOD
03A2'  3A 0033'     UPDATE    LD    A,(LINLEN)        ; GET LINE LENGTH
03A5'  3C                     INC   A
03A6'  4F                     LD    C,A               ; COLUMN
03A7'  06 18                  LD    B,SCRSZ           ; BC=HOME POSITION (LN.0/COL.0)
03A9'  21 0000                LD    HL,0
03AC'  22 5C7D                LD    (CCORDS),HL       ; INITIALIZE PLOT POSITION
03AF'  CD 0628'               CALL  UPDPOSN           ; UPDATE AND STORE HOME POSITION
03B2'  C3 00BF'               JP    GOODRET           ; RETURN BC=0
03B5'  0E 02        EXTNRM    LD    C,2               ; RETURN BC=2 FOR NO ROOM
03B7'  C3 00C1'               JP    ERRRET
                    ;
                    ;                                 ; MODE = 4 OR 5 USED TO DIRECT DATA/
                    ;                                 ; ATTRIBUTES TO DISPLAY FILE 1 OR 2
                    ;                                 ; WHILE THE ALTERNATE FILE IS AT THE
                    ;                                 ; SCREEN.  NO CHANGE TO H/W SETTING
                    ;
                    ;                                 ; INPUT     CURRENT VIDMOD   NEW VIDMOD
                    ;                                 ; -----     --------------   ----------
                    ;
                    ;                                 ;   4             80             80
                    ;                                 ;   4             81             84
                    ;                                 ;   4             84             84
                    ;                                 ;   4             85             80
                    ;
                    ;                                 ;   5             80             85
                    ;                                 ;   5             81             81
                    ;                                 ;   5             84             81
                    ;                                 ;   5             85             85
```

```
                    ;
03BA'  3A 5CC2      FRFV      LD    A,(VIDMOD)        ; ONLY VALID IF VIDMOD=80,81,84 OR 85
03BD'  4F                     LD    C,A               ; CURRENT VIDMOD TO C
03BE'  CB 7F                  BIT   7,A
03C0'  CA 00C4'               JP    Z,INVPAR          ; INVALID PARAMETER
03C3'  78                     LD    A,B               ; MODE 4 OR 5 TO A
03C4'  FE 04                  CP    4
03C6'  20 0A                  JR    NZ,DTADF2         ; MODE 5 - DATA TO DF2
                    ;                                 ; MODE 4 - DATA TO DF1
03C8'  CB 41        DTADF1    BIT   0,C               ; TEST IF DF1 ALREADY DEST.
03CA'  CA 00BF'               JP    Z,GOODRET         ; NO ACTION
03CD'  A9                     XOR   C                 ; SET VIDMOD=80 OR 84
03CE'  E6 FE                  AND   0FEH              ; BIT 0=0
03D0'  18 CD                  JR    SETMD3            ; UPDATE VARIABLES
                    ;
                    ;                                 ; MODE 5 - DATA TO DF2
03D2'  CB 41        DTADF2    BIT   0,C               ; TEST IF DF2 ALREADY DEST.
03D4'  C2 00BF'               JP    NZ,GOODRET        ; NO ACTION
03D7'  A9                     XOR   C                 ; SET VIDMOD=81 OR 85
03D8'  18 C5                  JR    SETMD3            ; UPDATE VARIABLES
                    ;
```

```
                              827              SUBTTL  COPY SCREEN
                              828     ;
                              829     ;
                              830     ;                               ; COPY LINES WITHIN OR BETWEEN
                              831     ;                               ; DISPLAY FILES
                              832     ;
                              833     ;
   03DA'                      834     COPYS0:                         ; HERE FROM BASIC ENTRY
   03DA'  2A 5C5D             835              LD      HL,(CH_ADD)    ; SAVE CURRENT POINTER
   03DD'  E5                  836              PUSH    HL
   03DE'  CD 0688'            837              CALL    GETSTRG        ; GET STRING OF PARAMETERS
   03E1'  20 09               838              JR      NZ,COPY01      ; FOUND STRING
   03E3'  E1                  839              POP     HL             ; RESTORE CH_ADD AND RETURN
   03E4'  22 5C5D             840              LD      (CH_ADD),HL    ; ERROR (NO STRING OR NULL STRING)
   03E7'  C9                  841              RET                    ; (BC CONTAINS STATUS)
                              842     ;
   03E8'  =0004               843     COPYWK   DEFS    4              ; WORK AREA FOR BASIC PARAMETERS
                              844     ;
                              845     ;
   03EC'  22 5C5D             846     COPY01   LD      (CH_ADD),HL    ; ADRS. OF STRING TO CH_ADD
   03EF'  CD 0418'            847              CALL    GETNO          ; GET PARAMETERS
   03F2'  32 03E9'            848              LD      (COPYWK+1),A   ; SOURCE LINE NO.
   03F5'  CD 0418'            849              CALL    GETNO          ;
   03F8'  32 03E8'            850              LD      (COPYWK),A     ; DEST. LINE NO.
   03FB'  CD 0418'            851              CALL    GETNO
   03FE'  32 03EB'            852              LD      (COPYWK+3),A   ; SOURCE DF
   0401'  CD 0418'            853              CALL    GETNO
   0404'  32 03EA'            854              LD      (COPYWK+2),A   ; DEST. DF
   0407'  CD 0418'            855              CALL    GETNO
   040A'  E1                  856              POP     HL             ; RESTORE CH_ADD
   040B'  22 5C5D             857              LD      (CH_ADD),HL
   040E'  ED 4B 03E8'         858              LD      BC,(COPYWK)
   0412'  ED 5B 03EA'         859              LD      DE,(COPYWK+2)
   0416'  18 25               860              JR      COPYSC         ; TEST VALIDITY AND DO COPY
                              861     ;
   0418'  2A 5C5D             862     GETNO    LD      HL,(CH_ADD)    ; LOAD ADDRESS
   041B'  7E                  863              LD      A,(HL)         ; GET CHAR. FROM STRING
   041C'  FE 2C               864              CP      2CH            ; TEST IF COMMA
   041E'  28 0F               865              JR      Z,GETN2
   0420'  FE 30               866              CP      30H            ; TEST IF DIGIT
   0422'  38 11               867              JR      C,COPERR       ; INVALID PARAMETER
                              868     ;                               ; OR END OF STRING
   0424'  FE 3A               869              CP      3AH
   0426'  30 0D               870              JR      NC,COPERR
   0428'  CD 30F9             871     GETN1    CALL    ININT          ; CONVERT TO BINARY
   042B'  CD 3193             872              CALL    FP2A
   042E'  D0                  873              RET     NC             ; VALID DIGIT IN A
   042F'  23                  874     GETN2    INC     HL
   0430'  22 5C5D             875              LD      (CH_ADD),HL
   0433'  18 E3               876              JR      GETNO          ; TEST NEXT CHAR.
                              877     ;
   0435'  E1                  878     COPERR   POP     HL             ; DISCARD RETURN FROM GETNO
```

```
   0436'  E1                  879     COPER1   POP     HL             ; RESTORE CH_ADD
   0437'  22 5C5D             880              LD      (CH_ADD),HL
   043A'  C3 00C4'            881              JP      INVPAR         ; RETURN BC=1 FOR INVALID
                              882                                     ; PARAMETER(S)
                              883     ;
                              884     ;
   043D'                      885     COPYSC:                         ; ENTRY WITH PARAMETERS IN REGS.
                              886     ;                               ; AS ABOVE
   043D'  A7                  887              AND     A              ; TEST VALIDITY
   043E'  CA 00C4'            888              JP      Z,INVPAR       ; ERROR IF LINE COUNT=0
   0441'  FE 19               889              CP      25             ;
   0443'  D2 00C4'            890              JP      NC,INVPAR      ; ERROR IF > 24
   0446'  F5                  891              PUSH    AF
   0447'  CD 05A8'            892              CALL    GTADRS         ; GET DF ADRS. FOR SOURCE
   044A'  DA 00C4'            893              JP      C,INVPAR       ; INVALID PARAMETER DETECTED
   044D'  E5                  894              PUSH    HL             ; SAVE SOURCE ADDRESS
   044E'  41                  895              LD      B,C            ; DEST. LINE
   044F'  53                  896              LD      D,E            ; DEST. DF
   0450'  CD 05A8'            897              CALL    GTADRS         ; GET DF ADRS. FOR DESTINATION
   0453'  DA 00C4'            898              JP      C,INVPAR
   0456'  D1                  899              POP     DE             ; SOURCE ADRS.
   0457'  EB                  900              EX      DE,HL          ; HL=SOURCE  DE=DEST.
   0458'  F1                  901              POP     AF             ; GET COUNT
   0459'  47                  902              LD      B,A
   045A'  E5                  903              PUSH    HL             ; SAVE STARTING ADDRESSES
   045B'  D5                  904              PUSH    DE             ;
   045C'  C5                  905              PUSH    BC             ; SAVE ORIG. LINE COUNT
   045D'  7D                  906     COPYS1   LD      A,L            ; CALCULATE # OF LINES SOURCE BLOCK
   045E'  07                  907              RLCA
   045F'  07                  908              RLCA
   0460'  07                  909              RLCA
   0461'  4F                  910              LD      C,A            ;
   0462'  3E 08               911              LD      A,8
   0464'  91                  912              SUB     C
   0465'  4F                  913              LD      C,A            ; # OF LINES THIS BLOCK
   0466'  C5                  914              PUSH    BC             ; SAVE NO.OF LINES/# OF LINES SOURCE BLK.
   0467'  B8                  915              CP      B              ; COMPARE TO TOTAL LINES
   0468'  38 71               916              JR      C,COPYS5       ; TOTAL LINES > THIS BLOCK
   046A'  78                  917              LD      A,B            ; CALCULATE # OF LINES DEST.BLOCK
   046B'  07                  918              RLCA
   046C'  07                  919              RLCA
   046D'  07                  920              RLCA
   046E'  4F                  921              LD      C,A
   046F'  3E 08               922              LD      A,8
   0471'  91                  923              SUB     C              ; A=# OF LINES DEST.BLOCK
   0472'  C1                  924              POP     BC             ; B=TOTAL LINES
   0473'  4F                  925              LD      C,A            ; C=# OF LINES DEST BLOCK
   0474'  B8                  926              CP      B              ; B=TOTAL LINES TO BE COPIED
   0475'  38 79               927              JR      C,COPYS7       ; TOTAL > DEST.BLOCK - USE DEST.LINE CNT.
                              928     ;
                              929     ;                               ; COPY IS WITHIN BOTH SOURCE AND DEST.BLOCKS
                              930     ;
```

```
     0477'  78                COPYS2  LD      A,B             ; NO. OF LINES
     0478'  06 00                     LD      B,0             ; REMAINING LINES
     047A'  C5                        PUSH    BC              ; SAVE REMAINING LINE COUNT
     047B'  47                COPYS3  LD      B,A             ; NO. OF LINES
     047C'  0E 08                     LD      C,8             ; SCAN COUNT
     047E'  78                COPYS4  LD      A,B             ; NO. OF LINES
     047F'  C5                        PUSH    BC              ; SAVE SCAN COUNT
     0480'  E6 07                     AND     7
     0482'  0F                        RRCA
     0483'  0F                        RRCA
     0484'  0F                        RRCA
     0485'  4F                        LD      C,A             ; BC=32 * NO. OF LINES
     0486'  06 00                     LD      B,0             ; (C=0 IF 256 FOR 8 LINES)
     0488'  A7                        AND     A               ; TEST IF 0
     0489'  20 02                     JR      NZ,COPY41
     048B'  06 01                     LD      B,1             ; SET TO 256
     048D'  E5                COPY41  PUSH    HL              ; SAVE ADDRESSES
     048E'  D5                        PUSH    DE
     048F'  ED B0                     LDIR                    ; COPY 'BC' BYTES
     0491'  D1                        POP     DE              ; RESTORE ADDRESSES
     0492'  E1                        POP     HL
     0493'  14                        INC     D               ; ADJUST FOR NEXT SCAN LINE
     0494'  24                        INC     H               ;  (+100H)
     0495'  C1                        POP     BC              ; SCAN COUNT
     0496'  0D                        DEC     C               ; DECREMENT SCAN COUNT
     0497'  20 E5                     JR      NZ,COPYS4       ; NEXT SCAN ROW
     0499'  78                        LD      A,B             ; SAVE # OF LINES JUST MOVED
     049A'  C1                        POP     BC              ; RESIDUAL LINE COUNT
     049B'  4F                        LD      C,A             ;
     049C'  78                        LD      A,B             ;
     049D'  A7                        AND     A
     049E'  28 22                     JR      Z,COPYXT        ; DONE
     04A0'  C5                        PUSH    BC              ; B=REMAINING LINE COUNT
     04A1'  79                        LD      A,C
     04A2'  E6 07                     AND     7
     04A4'  0F                        RRCA
     04A5'  0F                        RRCA
     04A6'  0F                        RRCA
     04A7'  4F                        LD      C,A
     04A8'  06 00                     LD      B,0
     04AA'  A7                        AND     A
     04AB'  20 02                     JR      NZ,COPY42
     04AD'  06 01                     LD      B,1             ; BC = NO. OF BYTES JUST MOVED
     04AF'  25                COPY42  DEC     H               ; ADJUST ADDRESSES TO START
     04B0'  09                        ADD     HL,BC           ; OF NEXT LINE IN EACH FILE
     04B1'  3E 78                     LD      A,78H
     04B3'  A4                        AND     H
     04B4'  67                        LD      H,A
     04B5'  E5                        PUSH    HL              ; SAVE ADJUSTED SOURCE ADRS
     04B6'  15                        DEC     D
     04B7'  EB                        EX      DE,HL           ; DEST. ADRS. TO HL
     04B8'  09                        ADD     HL,BC
```

```
     04B9'  3E 78                     LD      A,78H
     04BB'  A4                        AND     H
     04BC'  67                        LD      H,A
     04BD'  D1                        POP     DE              ; SOURCE ADRS. TO DE
     04BE'  EB                        EX      DE,HL           ; HL=SOURCE  DE=DEST.
     04BF'  C1                        POP     BC
     04C0'  18 9B                     JR      COPYS1          ; B=REMAINING LINE COUNT
     04C2'  C1                COPYXT  POP     BC              ; ORIG.LINE COUNT
     04C3'  68                        LD      L,B             ; CALCULATE # OF ATTRIBUTE BYTES
     04C4'  26 00                     LD      H,0
     04C6'  29                        ADD     HL,HL
     04C7'  29                        ADD     HL,HL
     04C8'  29                        ADD     HL,HL
     04C9'  29                        ADD     HL,HL
     04CA'  29                        ADD     HL,HL           ; 32 * NO. OF LINES
     04CB'  44                        LD      B,H
     04CC'  4D                        LD      C,L
     04CD'  E1                        POP     HL              ; DEST.ADDRESS TO HL
     04CE'  CD 0692'                  CALL    CALCATT         ; ADRS. OF ATTRIBUTE FILE
     04D1'  EB                        EX      DE,HL           ; DEST.ADRS. TO DE
     04D2'  E1                        POP     HL              ; SOURCE ADDRESS
     04D3'  CD 0692'                  CALL    CALCATT         ; ADRS. OF ATTRIBUTE FILE
     04D6'  ED B0                     LDIR                    ; COPY ATTRIBUTES
     04D8'  C3 008F'                  JP      GOODRET         ; RETURN BC=0
                              ;
     04DB'  41                COPYS5  LD      B,C             ; # OF LINES SOURCE BLOCK TO B
     04DC'  7B                        LD      A,E             ; CALCULATE # OF LINES DEST. BLOCK
     04DD'  07                        RLCA
     04DE'  07                        RLCA
     04DF'  07                        RLCA
     04E0'  4F                        LD      C,A
     04E1'  3E 08                     LD      A,8
     04E3'  91                        SUB     C               ; A=# LINES DEST.BLOCK
     04E4'  4F                        LD      C,A             ; SAVE IN C
     04E5'  B8                        CP      B               ; COMPARE TO LINES SOURCE BLOCK
     04E6'  38 08                     JR      C,COPYS7        ; DEST.SIZE SMALLER - USE DEST.LINE CNT
     04E8'  C1                        POP     BC              ; B=TOTAL LINE COUNT/C=SOURCE LINE CNT.
     04E9'  78                COPYS6  LD      A,B
     04EA'  91                        SUB     C
     04EB'  47                        LD      B,A             ; B=REMAINING LINECOUNT
     04EC'  C5                        PUSH    BC
     04ED'  79                        LD      A,C             ; # OF LINES
     04EE'  18 8B                     JR      COPYS3          ; COPY 'A' LINES
     04F0'  79                COPYS7  LD      A,C             ; # LINES DEST.BLK
     04F1'  C1                        POP     BC              ; B=TOTAL LINE COUNT
     04F2'  4F                        LD      C,A             ; C=DEST. LINE CNT.
     04F3'  18 F4                     JR      COPYS6
                              ;
```

```
                          SUBTTL  EXCHANGE SCREEN
                   ;
                   ;                          ; EXCHANGE LINES WITHIN OR BETWEEN
                   ;                          ; DISPLAY FILES
                   ;
04F5'              EXCHS0                     ; ENTRY FROM BASIC - GET PARAMETERS
                   ;                          ; FROM STRING TO APPROPRIATE REGS.
                   ;
04F5'  2A 5C50            LD     HL,(CH_ADD)  ; SAVE CURRENT POINTER
04F8'  E5                 PUSH   HL
04F9'  CD 06B8'           CALL   GETSTRG      ; GET STRING OF PARAMETERS
04FC'  20 05              JR     NZ,EXCH01    ; FOUND STRING
04FE'  E1                 POP    HL           ; RESTORE CH_ADD AND RETURN
04FF'  22 5C50            LD     (CH_ADD),HL  ; ERROR (NO STRING OR NULL STRING)
0502'  C9                 RET                 ; (BC CONTAINS STATUS)
                   ;
0503'  22 5C50     EXCH01 LD     (CH_ADD),HL  ; ADDRESS OF STRING
0506'  CD 0418'           CALL   GETNO        ; GET PARAMETERS
0509'  32 03E8'           LD     (COPYWK),A   ; SOURCE LINE NO.
050C'  CD 0418'           CALL   GETNO
050F'  32 03EA'           LD     (COPYWK+2),A ; DEST. LINE NO.
0512'  CD 0418'           CALL   GETNO        ;
0515'  32 03E9'           LD     (COPYWK+1),A ; SOURCE DF (1 OR 2)
0518'  CD 0418'           CALL   GETNO
051B'  32 03EB'           LD     (COPYWK+3),A ; DEST. DF
051E'  CD 0418'           CALL   GETNO        ; NO. OF LINES
0521'  E1                 POP    HL           ; RESTORE CH_ADD
0522'  22 5C50            LD     (CH_ADD),HL  ;
0525'  ED 4B 03E8'        LD     BC,(COPYWK)  ; LOAD REGS.
0529'  ED 5B 03EA'        LD     DE,(COPYWK+2)
                   ;                          ;
                   ;
052D'              EXCHSC:                    ; ROUTINE TO EXCHANGE LINES IN THE
                   ;                          ; DISPLAY FILE(S).
                   ;                          ;
                   ;                          ; INPUTS:  B=DF FOR SOURCE 1 (1 OR 2)
                   ;                          ;          C=LINE NO. FOR SOURCE 1
                   ;                          ;          D=DF FOR SOURCE 2 (1 OR 2)
                   ;                          ;          E=LINE NO. FOR SOURCE 2
                   ;                          ;          A=COUNT (# OF LINES TO BE
                   ;                          ;            EXCHANGED
                   ;
                   ;
                   ;
                   ;
                   ;
052D'  A7                 AND    A            ; TEST VALI COUNT
052E'  CA 00C4'           JP     Z,INVPAR
0531'  FE 19              CP     25
0533'  D2 00C4'           JP     NC,INVPAR
0536'  F5                 PUSH   AF           ; SAVE LINE COUNT
0537'  D5                 PUSH   DE           ; SAVE SOURCE 2 INFO.
```

```
0538'  50                 LD     D,B          ; DF
0539'  41                 LD     B,C          ; LINE NO
053A'  CD 05A8'           CALL   GTADRS       ; GET DF ADRS.FOR SOURCE 1
053D'  DA 00C4'           JP     C,INVPAR     ; ERROR DETECTED
0540'  D1                 POP    DE           ; SOURCE 2 INFO.
0541'  E5                 PUSH   HL           ; SAVE SOURCE 1 ADRS.
0542'  43                 LD     B,E          ; LINE NO.
0543'  CD 05A8'           CALL   GTADRS       ; GET DF ADRS. FOR SOURCE 2
0546'  DA 00C4'           JP     C,INVPAR
0549'  D1                 POP    DE           ; ADDRESSES IN DE AND HL
054A'  F1                 POP    AF           ; LINE COUNT IN A
054B'  E5                 PUSH   HL           ; SOURCE 2 STARTING ADRS. FOR EXIT
054C'  D5                 PUSH   DE           ; SOURCE 1 STARTING ADRS. FOR EXIT
054D'  F5                 PUSH   AF           ; ORIG.LINE COUNT FOR EXIT
054E'  F5                 PUSH   AF           ; WORKING LINE COUNT
054F'  06 08       EXCH0  LD     B,8          ; SCAN COUNT
0551'  E5          EXCH1  PUSH   HL           ; SAVE ADDRESSES AND SCAN COUNT
0552'  D5                 PUSH   DE
0553'  C5                 PUSH   BC
0554'  01 0020            LD     BC,32        ; NO.OF BYTES IN SCAN ROW FOR
                   ;                          ; A LINE ON THE SCREEN
0557'  CD 0593'           CALL   EXCHLP       ; EXCHANGE BYTES
055A'  C1                 POP    BC           ; SCAN COUNT IN B
055B'  D1                 POP    DE
055C'  E1                 POP    HL           ; ADDRESSES
055D'  14                 INC    D            ; ADJUST TO NEXT SCAN ROW
055E'  24                 INC    H
055F'  10 F0              DJNZ   EXCH1        ; DO NEXT ROW
0561'  F1                 POP    AF           ; LINE COUNT IN A
0562'  15                 DEC    D            ; ADJUST ADDRESSES BACK 1 SCAN ROW
0563'  25                 DEC    H
0564'  3D                 DEC    A            ; ADJUST LINE COUNT
0565'  28 12              JR     Z,EXCHXT     ; DONE
0567'  F5                 PUSH   AF           ; REMAINING LINE COUNT
0568'  01 0020            LD     BC,32        ; ADJUST ADDRESSES TO START
056B'  09                 ADD    HL,BC        ; OF NEXT LINE
056C'  3E 78              LD     A,78H
056E'  A4                 AND    H
056F'  67                 LD     H,A
0570'  EB                 EX     DE,HL
0571'  09                 ADD    HL,BC
0572'  3E 78              LD     A,78H
0574'  A4                 AND    H
0575'  67                 LD     H,A
0576'  EB                 EX     DE,HL
0577'  18 D6              JR     EXCH0        ; DO NEXT LINE
0579'  F1          EXCHXT POP    AF           ; A=ORIG. LINE COUNT
057A'  6F                 LD     L,A          ; LINE COUNT
057B'  26 00              LD     H,0
057D'  29                 ADD    HL,HL        ; # OF ATTRIBUTE BYTES TO EXCHANGE
057E'  29                 ADD    HL,HL
057F'  29                 ADD    HL,HL
```

```
     0580'  29                   1136            ADD     HL,HL
     0581'  29                   1137            ADD     HL,HL           ; (32*NO. OF LINES)
     0582'  44                   1138            LD      B,H
     0583'  4D                   1139            LD      C,L             ; COUNT TO BC
     0584'  E1                   1140            POP     HL              ; SOURCE 1 ADRS.
     0585'  CD 0692'             1141            CALL    CALCATT         ; GET ADRS. OF ATTRIBUTE FILE
     0588'  EB                   1142            EX      DE,HL           ; SOURCE 1 ATTRIBUTE ADRS. IN DE
     0589'  E1                   1143            POP     HL              ; SOURCE 2 ADRS.
     058A'  CD 0692'             1144            CALL    CALCATT         ; SOURCE 2 ATTRIBUTE ADRS. IN HL
     058D'  CD 0593'             1145            CALL    EXCHLP          ; EXCHANGE ATTRIBUTE BYTES
     0590'  C3 008F'             1146            JP      GOODRET         ; RETURN B=0
                                 1147    ;
                                 1148    ;
                                 1149    ;                               ; EXCHANGE LOOP
                                 1150    ;
                                 1151    ;                               ; EXCHANGES DATA BETWEEN TWO
                                 1152    ;                               ; MEMORY AREAS.  ADDRESSES IN
                                 1153    ;                               ; DE AND HL, BYTE COUNT IN BC
                                 1154    ;
     0593'  C5                   1155    EXCHLP  PUSH    BC              ; SAVE COUNT
     0594'  7E                   1156            LD      A,(HL)          ; DATA FROM SOURCE 2
     0595'  4F                   1157            LD      C,A             ; TO WKG.REG.
     0596'  1A                   1158            LD      A,(DE)          ; DATA FROM SOURCE 1
     0597'  A9                   1159            XOR     C               ; EXCHANGE VIA XOR
     0598'  F5                   1160            PUSH    AF              ; SAVE INTERMEDIATE RESULT
     0599'  A9                   1161            XOR     C               ; A NOW CONTAINS DATA FOR SOURCE 2
     059A'  4F                   1162            LD      C,A             ; C=NEW DATA FOR SOURCE 2
     059B'  F1                   1163            POP     AF              ; INTERMEDIATE RESULT
     059C'  A9                   1164            XOR     C               ; A=NEW DATA FOR SOURCE 1
     059D'  12                   1165            LD      (DE),A          ; WRITE NEW DATA
     059E'  71                   1166            LD      (HL),C
     059F'  13                   1167            INC     DE              ; ADJUST TO NEXT BYTE
     05A0'  23                   1168            INC     HL
     05A1'  C1                   1169            POP     BC              ;
     05A2'  0B                   1170            DEC     BC              ; DECREMENT COUNT
     05A3'  78                   1171            LD      A,B             ; TEST IF DONE
     05A4'  B1                   1172            OR      C
     05A5'  20 EC                1173            JR      NZ,EXCHLP
     05A7'  C9                   1174            RET
                                 1175
                                 1176    ;
                                 1177    ;                               ; SUB-RTN. TO GET
                                 1178    ;                               ; DF ADRS. OF LINE IN B (0-23)
                                 1179    ;                               ; FOR DF IN D (1 OR 2)
                                 1180    ;                               ; RETURNS CARRY IF INVALID PARAMETER
     05A8'  78                   1181    GTADRS  LD      A,B
     05A9'  FE 18                1182            CP      24              ; TEST VALID LINE NO.
     05AB'  30 1E                1183            JR      NC,GAERR
     05AD'  0F                   1184            RRCA
     05AE'  0F                   1185            RRCA
     05AF'  0F                   1186            RRCA
     05B0'  E6 E0                1187            AND     0E0H
```

```
     05B2'  6F                   1188            LD      L,A
     05B3'  78                   1189            LD      A,B
     05B4'  E6 18                1190            AND     18H
     05B6'  F6 40                1191            OR      40H
     05B8'  67                   1192            LD      H,A
     05B9'  7A                   1193            LD      A,D
     05BA'  A7                   1194            AND     A
     05BB'  28 0E                1195            JR      Z,GAERR         ; ERROR IF NOT 1 OR 2
     05BD'  FE 03                1196            CP      3
     05BF'  30 0A                1197            JR      NC,GAERR
     05C1'  CB 47                1198            BIT     0,A             ; TEST WHICH DF
     05C3'  20 04                1199            JR      NZ,GTADR1       ; DF1
     05C5'  7C                   1200            LD      A,H
     05C6'  F6 20                1201            OR      20H             ; DF2
     05C8'  67                   1202            LD      H,A
     05C9'  A7                   1203    GTADR1  AND     A               ; RETURN NO CARRY
     05CA'  C9                   1204            RET
                                 1205    ;
     05CB'  37                   1206    GAERR   SCF                     ; SET CARRY
     05CC'  C9                   1207            RET
                                 1208    ;
```

```
                               SUBTTL  INTERNAL SUB-RTNS.
                      ;
                      ;
                      ;
                                                      ; INPUT:  VIDEO MODE IN A
                                                      ; OUTPUT: M/W SETTING IN B
                                                      ;         VIDMOD SETTING IN C
                                                      ; RETURNS NZ STATUS IF MODE INVALID
                                                      ;
                                                      ;  VALID VALUES:  INPUT      M/W      VIDMOD
                                                      ;                 -----      ---      ------
                                                      ;   **DISPLAY FILE ACTIVE AT SCREEN
                                                      ;
                                                      ;    DF1 ONLY        0          0          0
                                                      ;   DF1*& DF2       80          0         80
                                                      ;   DF1 & DF2*       1          1         81
                                                      ;  HIGH RES.GR.      2          2          2
                                                      ;  64/80-COLUMN  06 - 3E   06 - 3E    46 - 7E
05CD'   4F            GETVAL  LD     C,A
05CE'   CB 47                 BIT    0,A
05D0'   20 16                 JR     NZ,TST01
05D2'   FE 80                 CP     80H
05D4'   28 1A                 JR     Z,SET0
05D6'   CB 7F                 BIT    7,A
05D8'   C0                    RET    NZ
05D9'   47                    LD     B,A
05DA'   FE 02                 CP     2
05DC'   C8                    RET    Z
05DD'   E6 C6                 AND    0C6H
05DF'   EE 06                 XOR    6
05E1'   C0                    RET    NZ
05E2'   3E 40                 LD     A,40H
05E4'   B1                    OR     C
05E5'   4F                    LD     C,A
05E6'   AF                    XOR    A
05E7'   C9                    RET
05E8'   FE 01         TST01   CP     1
05EA'   C0                    RET    NZ
05EB'   06 01                 LD     B,1
05ED'   0E 81                 LD     C,81H
05EF'   C9                    RET
05F0'   AF            SET0    XOR  A
05F1'   47                    LD   B,A
05F2'   C9                    RET
                      ;
                      ;
                                                      ; ROUTINES TO ENABLE CHUNK 0 IN ROM EXT.
                                                      ; FOR ACCESS TO CHNGVID ROUTINE
05F3'   F5            ENBLEXT PUSH  AF
05F4'   DB FF                 IN     A,(HREXPT)
05F6'   F6 80                 OR     80H       ; SELECT ROM EXT.
05F8'   D3 FF                 OUT    (HREXPT),A
```

```
05FA'   3E 03                 LD     A,3
05FC'   D3 F6                 OUT    (DKMSPT),A
05FE'   F1                    POP    AF
05FF'   C9                    RET
                      ;
0600'   F5            ENBLMOME  PUSH  AF
0601'   AF                      XOR   A
0602'   D3 F6                   OUT   (DKMSPT),A
0604'   DB FF                   IN    A,(HREXPT)
0606'   E6 3F                   AND   03FH
0608'   D3 FF                   OUT   (HREXPT),A
060A'   F1                      POP   AF
060B'   C9                      RET
                      ;
                                                      ; TEST PARAMETER VALIDITY
                                                      ; IF NOT VALID, DISCARDS RETURN
                                                      ; AND EXITS VIA INVPAR
060C'   3E 17         TSTPAR  LD     A,23             ; TEST LINE >23
060E'   B8                    CP     B
060F'   30 04                 JR     NC,TSTPR1
0611'   F1            PARERR  POP    AF
0612'   C3 00C4'              JP     INVPAR
0615'   3A 0033'      TSTPR1  LD     A,(LINLEN)
0618'   3D                    DEC    A
0619'   B9                    CP     C            ; TEST COL. >31
061A'   38 F5                 JR     C,PARERR
061C'   C9                    RET
                      ;                               ; CONVERT LINE/COL. FROM USER TO
                                                      ; INTERNAL FORMAT AND VICE VERSA
                                                      ; USER FORMAT:  LINES 0-23
                                                      ;               COL.0-31
                                                      ; INTERNAL FORMAT: LINES 24-1
                                                      ;                  COL.  33-2
                                                      ;                (COL.1 END OF LINE)
061D'   3A 0033'      CONVFM  LD     A,(LINLEN)
0620'   3C                    INC    A
0621'   91                    SUB    C
0622'   4F                    LD     C,A
0623'   3E 18                 LD     A,SCRSZ
0625'   90                    SUB    B
0626'   47                    LD     B,A
0627'   C9                    RET
                      ;
                      ;
                      ;
0628'                 UPDPOSN                         ; ENTER HERE WITH BC=LINE/COL.IN
                                                      ; INTERNAL FORMAT
0628'   CD 062D'              CALL    CALCPOS         ; CALCULATE POSITION
062B'   18 28                 JR      STPOSN          ; STORE UPDATED POSITION AND RETURN
                      ;
                      ;
                      ;                               ; ROUTINE TO CALCULATE POSITION IN DF
```

```
                                                          ; RETURNS DF ADRS. IN HL.  PRESERVES
                                                          ; LINE/COLUMN POSITION IN BC
                        ;
062D'   CD 063A'        CALCPOS CALL    LNBU              ; GET DISPLAY FILE ADRS.
0630'   3A 0033'                LD      A,(CLINLEN)       ; ADD COLUMN OFFSET
0633'   3C                      INC     A
0634'   91                      SUB     C
0635'   5F                      LD      E,A
0636'   16 00                   LD      D,0
0638'   19                      ADD     HL,DE
0639'   C9                      RET
                        ;
                        ;
063A'                   LNBU:                             ; GET DISPLAY FILE ADDRESS
                                                          ; FOR START OF LINE IN B
063A'   3E 18                   LD  A,SCRSZ
063C'   90                      SUB B
063D'   57                      LD  D,A
063E'   0F                      RRCA
063F'   0F                      RRCA
0640'   0F                      RRCA
0641'   E6 E0                   AND 0E0H
0643'   6F                      LD  L,A
0644'   7A                      LD  A,D
0645'   E6 18                   AND 18H
0647'   F6 40                   OR  40H
0649'   67                      LD  H,A
064A'   3A 5CC2                 LD  A,(VIDMOD)
064D'   CB 47                   BIT 0,A                   ; TEST IF DF1
064F'   C8                      RET Z
0650'   3E 20                   LD  A,20H                 ; SET TO DF2
0652'   B4                      OR  H
0653'   67                      LD  H,A
0654'   C9                      RET

0655'                   STPOSN:                           ; STORE CURSOR POSITION
0655'   ED 43 0034'             LD  (CURPOS),BC
0659'   22 0036'                LD  (DFADRS),HL
065C'   C9                      RET
                        ;
065D'                   LDPOSN:                           ; LOAD CURSOR POSITION
065D'   ED 4B 0034'             LD  BC,(CURPOS)
0661'   2A 0036'                LD  HL,(DFADRS)
0664'   C9                      RET
                        ;
                        ;
                        ;
                        ;
0665'                   UPDATT:                           ; UPDATE ATTRIBUTE BYTE FOR CHARACTER
                                                          ; JUST PRINTED
                                                          ; HL = ANY SCAN OF CHAR.IN DF
                        ;
```

```
0665'   CD 0692'                CALL    CALCATT           ; ADRS. OF ATTRIBUTE BYTE TO HL
0668'   3A 0039'                LD      A,(ATTBYT)        ;
066B'   5F                      LD      E,A               ; CURRENT ATTR.VALUE TO E
066C'   3A 003F'                LD      A,(ATTMSK)        ;
066F'   57                      LD      D,A               ; MASK TO D
0670'   3A 003B'                LD      A,(MASKB)
0673'   47                      LD      B,A               ; FLAGS TO B
0674'   7E                      LD      A,(HL)            ; BYTE FROM ATTRIBUTE FILE
0675'   AB                      XOR     E
0676'   A2                      AND     D
0677'   AB                      XOR     E                 ; NEW ATTR.FOR 0; OLD FOR 1
0678'   CB 60                   BIT     4,B               ; SET INK COMPLEMENT OF PAPER?
067A'   28 08                   JR      Z,UPDAT1          ;
067C'   E6 F8                   AND     0F8H              ; SET INK TO BLACK
067E'   CB 6F                   BIT     5,A               ; IS PAPER 4-7
0680'   20 02                   JR      NZ,UPDAT1         ; YES - USE BLACK INK
0682'   F6 07                   OR      7                 ; NO -  USE WHITE INK
0684'   CB 70           UPDAT1  BIT     6,B               ; SET PAPER COMPLEMENT OF INK?
0686'   28 08                   JR      Z,UPDAT2          ;
0688'   E6 C7                   AND     0C7H              ; SET PAPER TO BLACK
068A'   CB 57                   BIT     2,A               ; IS INK 4-7
068C'   20 02                   JR      NZ,UPDAT2         ; YES - USE BLACK PAPER
068E'   F6 38                   OR      38H               ; NO -  USE WHITE PAPER
0690'   77              UPDAT2  LD      (HL),A            ; TO ATTRIBUTE FILE
0691'   C9                      RET
                        ;
                        ;                                 ; SUB-RTN. TO CALCULATE ADRS. OF
                        ;                                 ; ATTRIBUTE BYTE FROM ADRS. OF
                        ;                                 ; ANY SCAN ROW IN DF
                        ;
0692'   7C              CALCATT LD      A,H               ; UPPER BYTE OF ADDRESS
0693'   0F                      RRCA
0694'   0F                      RRCA
0695'   0F                      RRCA
0696'   E6 03                   AND     03H
0698'   F6 58                   OR      58H
069A'   CB 6C                   BIT     5,H               ; TEST WHICH DF
069C'   28 02                   JR      Z,CALCA1
069E'   F6 20                   OR      20H               ; DF2
06A0'   67              CALCA1  LD      H,A               ; ADRS. OF ATTRIBUTE IN DF2
06A1'   C9                      RET
                        ;
06A2'                   LDATTR                            ; LOAD INTERNAL ATTRIBUTE VARIABLES
                                                          ; FROM SYSTEM VARIABLES
06A2'   F5                      PUSH    AF                ; SAVE A
06A3'   3A 5C8D                 LD      A,(ATTR_P)        ;
06A6'   32 0039'                LD      (ATTBYT),A        ;
06A9'   3A 5C8E                 LD      A,(MASK_P)        ;
06AC'   32 003F'                LD      (ATTMSK),A        ;
06AF'   3A 5C91                 LD      A,(P_FLAG)        ;
06B2'   0F                      RRCA                      ; SHIFT ODD BITS TO EVEN
06B3'   32 003A'                LD      (MASKB),A         ;
```

```
    06B6'  F1                    1418             POP     AF
    06B7'  C9                    1419             RET
                                 1420    ;
    06B8'  3A 5CC3               1421    GETSTRG LD    A,(PARAMS)          ; GET STRING ID
    06BB'  E6 1F                 1422            AND   1FH                 ; MASK OFF UPPER BITS
    06BD'  F6 40                 1423            OR    40H                 ; STRING VARIABLE IDENTIFIER
    06BF'  57                    1424            LD    D,A                 ; SAVE IN D
    06C0'  2A 5C4B               1425            LD    HL,(VARS)           ; FIND STRING
    06C3'  7E                    1426    GTSTR1  LD    A,(HL)              ;
    06C4'  E6 7F                 1427            AND   07FH                ; TEST IF END OF VARS AREA
    06C6'  28 13                 1428            JR    Z,NOSTRG            ; NO FIND - RETURN BC=2
    06C8'  BA                    1429            CP    D                   ; TEST IF MATCH
    06C9'  28 08                 1430            JR    Z,GTSTR2            ; FOUND STRING
    06CB'  D5                    1431            PUSH DE                   ; SAVE STRING ID
    06CC'  CD 1720               1432            CALL RECLEN               ; RETURNS ADRS. OF NEXT VAR. IN DE
    06CF'  EB                    1433            EX    DE,HL               ; ADRS. TO HL
    06D0'  D1                    1434            POP   DE                  ; RESTORE STRING ID
    06D1'  18 F0                 1435            JR    GTSTR1              ; LOOK AGAIN
    06D3'  23                    1436    GTSTR2  INC   HL                  ; GET LENGTH
    06D4'  4E                    1437            LD    C,(HL)
    06D5'  23                    1438            INC   HL
    06D6'  46                    1439            LD    B,(HL)
    06D7'  23                    1440            INC   HL                  ; FIRST TEXT CODE
    06D8'  78                    1441            LD    A,B                 ; TEST IF NULL STRING
    06D9'  B1                    1442            OR    C
    06DA'  C9                    1443            RET                       ; RETURN (Z IF NULL STRING/NZ IF NOT)
                                 1444    ;
    06DB'  0E 02                 1445    NOSTRG  LD     C,2
    06DD'  06 00                 1446            LD     B,0
    06DF'  C9                    1447            RET                       ; (Z AND BC=2 FOR NO FIND)
                                 1448    ;
                                 1449    ;
```

```
                                 1451            SUBTTL GRAPHICS CHAR.SET
                                 1452    ;
                                 1453    ;                                 ;PIXEL PATTERNS FOR STD.GRAPHICS SET
                                 1454    ;                                 ; 0=BACKGROUND(PAPER) 1=FOREGROUND(INK)
                                 1455    ;
    06E0'  00                    1456    GRPST   defb 00000000b            ; code 80        graphics space
    06E1'  00                    1457            defb 00000000b
    06E2'  00                    1458            defb 00000000b
    06E3'  00                    1459            defb 00000000b
    06E4'  00                    1460            defb 00000000b
    06E5'  00                    1461            defb 00000000b
    06E6'  00                    1462            defb 00000000b
    06E7'  00                    1463            defb 00000000b
                                 1464    ;
    06E8'  0F                    1465            defb 00001111b            ; code 81        graphics
    06E9'  0F                    1466            defb 00001111b
    06EA'  0F                    1467            defb 00001111b
    06EB'  0F                    1468            defb 00001111b
    06EC'  00                    1469            defb 00000000b
    06ED'  00                    1470            defb 00000000b
    06EE'  00                    1471            defb 00000000b
    06EF'  00                    1472            defb 00000000b
                                 1473    ;
                                 1474
    06F0'  F0                    1475            defb 11110000b            ; code 82        graphics
    06F1'  F0                    1476            defb 11110000b
    06F2'  F0                    1477            defb 11110000b
    06F3'  F0                    1478            defb 11110000b
    06F4'  00                    1479            defb 00000000b
    06F5'  00                    1480            defb 00000000b
    06F6'  00                    1481            defb 00000000b
    06F7'  00                    1482            defb 00000000b
                                 1483
    06F8'  FF                    1484            defb 11111111b            ; code 83        graphics
    06F9'  FF                    1485            defb 11111111b
    06FA'  FF                    1486            defb 11111111b
    06FB'  FF                    1487            defb 11111111b
    06FC'  00                    1488            defb 00000000b
    06FD'  00                    1489            defb 00000000b
    06FE'  00                    1490            defb 00000000b
    06FF'  00                    1491            defb 00000000b
                                 1492
                                 1493    ;
    0700'  00                    1494            defb 00000000b            ; code 84        graphics
    0701'  00                    1495            defb 00000000b
    0702'  00                    1496            defb 00000000b
    0703'  00                    1497            defb 00000000b
    0704'  0F                    1498            defb 00001111b
    0705'  0F                    1499            defb 00001111b
    0706'  0F                    1500            defb 00001111b
    0707'  0F                    1501            defb 00001111b
                                 1502    ;
```

```
  0708'  0F          1503          defb 00001111b        ; code 85      graphics
  0709'  0F          1504          defb 00001111b
  070A'  0F          1505          defb 00001111b
  070B'  0F          1506          defb 00001111b
  070C'  0F          1507          defb 00001111b
  070D'  0F          1508          defb 00001111b
  070E'  0F          1509          defb 00001111b
  070F'  0F          1510          defb 00001111b
                     1511
                     1512
  0710'  F0          1513          defb 11110000b        ; code 86       graphics
  0711'  F0          1514          defb 11110000b
  0712'  F0          1515          defb 11110000b
  0713'  F0          1516          defb 11110000b
  0714'  0F          1517          defb 00001111b
  0715'  0F          1518          defb 00001111b
  0716'  0F          1519          defb 00001111b
  0717'  0F          1520          defb 00001111b
                     1521    ;
  0718'  FF          1522          defb 11111111b        ;code 87       graphics
  0719'  FF          1523          defb 11111111b
  071A'  FF          1524          defb 11111111b
  071B'  FF          1525          defb 11111111b
  071C'  0F          1526          defb 00001111b
  071D'  0F          1527          defb 00001111b
  071E'  0F          1528          defb 00001111b
  071F'  0F          1529          defb 00001111b
                     1530    ;
  0720'  00          1531          defb 00000000b        ; code 88      graphics
  0721'  00          1532          defb 00000000b
  0722'  00          1533          defb 00000000b
  0723'  00          1534          defb 00000000b
  0724'  F0          1535          defb 11110000b
  0725'  F0          1536          defb 11110000b
  0726'  F0          1537          defb 11110000b
  0727'  F0          1538          defb 11110000b
                     1539    ;
  0728'  0F          1540          defb 00001111b        ; code 89       graphics
  0729'  0F          1541          defb 00001111b
  072A'  0F          1542          defb 00001111b
  072B'  0F          1543          defb 00001111b
  072C'  F0          1544          defb 11110000b
  072D'  F0          1545          defb 11110000b
  072E'  F0          1546          defb 11110000b
  072F'  F0          1547          defb 11110000b
                     1548    ;
  0730'  F0          1549          defb 11110000b        ; code 8A      graphics
  0731'  F0          1550          defb 11110000b
  0732'  F0          1551          defb 11110000b
  0733'  F0          1552          defb 11110000b
  0734'  F0          1553          defb 11110000b
  0735'  F0          1554          defb 11110000b
```

```
  0736'  F0          1555          defb 11110000b
  0737'  F0          1556          defb 11110000b
                     1557    ;
  0738'  FF          1558          defb 11111111b        ; code 8B      graphics
  0739'  FF          1559          defb 11111111b
  073A'  FF          1560          defb 11111111b
  073B'  FF          1561          defb 11111111b
  073C'  F0          1562          defb 11110000b
  073D'  F0          1563          defb 11110000b
  073E'  F0          1564          defb 11110000b
  073F'  F0          1565          defb 11110000b
                     1566    ;
  0740'  00          1567          defb 00000000b        ; code 8C      graphics
  0741'  00          1568          defb 00000000b
  0742'  00          1569          defb 00000000b
  0743'  00          1570          defb 00000000b
  0744'  FF          1571          defb 11111111b
  0745'  FF          1572          defb 11111111b
  0746'  FF          1573          defb 11111111b
  0747'  FF          1574          defb 11111111b
                     1575    ;
  0748'  0F          1576          defb 00001111b        ; code 8D      graphics
  0749'  0F          1577          defb 00001111b
  074A'  0F          1578          defb 00001111b
  074B'  0F          1579          defb 00001111b
  074C'  FF          1580          defb 11111111b
  074D'  FF          1581          defb 11111111b
  074E'  FF          1582          defb 11111111b
  074F'  FF          1583          defb 11111111b
                     1584    ;
  0750'  F0          1585          defb 11110000b        ;code 8E       graphics
  0751'  F0          1586          defb 11110000b
  0752'  F0          1587          defb 11110000b
  0753'  F0          1588          defb 11110000b
  0754'  FF          1589          defb 11111111b
  0755'  FF          1590          defb 11111111b
  0756'  FF          1591          defb 11111111b
  0757'  FF          1592          defb 11111111b
                     1593    ;
  0758'  FF          1594          defb 11111111b        ;code 8F       graphics
  0759'  FF          1595          defb 11111111b
  075A'  FF          1596          defb 11111111b
  075B'  FF          1597          defb 11111111b
  075C'  FF          1598          defb 11111111b
  075D'  FF          1599          defb 11111111b
  075E'  FF          1600          defb 11111111b
  075F'  FF          1601          defb 11111111b
                     1602
                     1603          END
```

```
A         Reserved        ATTBYT    0039            ATTMSK    003F            ATTR$P    5C8D            B         Reserved
BOTLN      0020           C          Reserved       CALCAT    0692            CALCA1    06A0            CALCPO    062D
CHNGVI    0E8E            CHRSET    3C00            CHTBL     002F            CH$ADD    5C5D            CLINIT    1800
CLRCTL    000C            CLRSB0    01D4            CLRSCB    000E IN         CLRSCN    01D8 IN         CLRSC0    01EE
CLRSC1    0202            CLRSC2    0200            CLRSC3    0211            CLRSC4    0214            CLRSC5    021F
CLRSC7    0254            CLRSXT    0250            CONVFM    0610            COORDS    5C7D            COPERR    0435
COPER1    0436            COPYSB    0040 IN         COPYSC    0430 IN         COPYS0    030A            COPYS1    045D
COPYS2    0477            COPYS3    047B            COPYS4    047E            COPYS5    040B            COPYS6    04E9
COPYS7    04F0            COPYWK    03E8            COPYXT    04C2            COPY01    03EC            COPY41    048D
COPY42    04AF            CURPOS    0034            D         Reserved        DATAB     0000            DEST7     F7C0
DFADRS    0036            DKMSPT    00F4            DRIVES    6840            DTADF1    03C8            DTADF2    0302
E         Reserved        ENBLEX    05F3            ENBLMD    0600            ERRRET    00C1            EXCHLP    0593
EXCHSB    0043 IN         EXCHSC    0520 IN         EXCHS0    04F5            EXCHXT    0579            EXCH0     054F
EXCH01    0503            EXCH1     0551            EXTNRM    03B5            FIX       97C0            FIXTBL    1000
FP2A       3193           FREV      03BA            GAERR     05CB            GETAB0    02DC            GETATE    001E IN
GETATT    02E0 IN         GETCB0    02F1            GETCTL    0019            GETCUB    0021 IN         GETCUR    02F1 IN
GETC1     0309            GETN0     0418            GETN1     0428            GETN2     042F            GETSTR    06B8
GETVAL    05CD            GOODRE    008F            GRBLK     01A9            GRPHST    05E0            GRPST     06E0
GRTBL     0031            GTADRS    05A8            GTADR1    05C9            GTCHAR    0260 IN         GTCHB0    025C
GTCHRB    001B IN         GTCH1     0271            GTCH2     0276            GTCH23    0288            GTCH3     028D
GTCH31    0290            GTCH32    02AB            GTCH4     02AF            GTCH5     02CA            GTCH6     0209
GTINDX    003A            GTSTR1    06C3            GTSTR2    06D3            H         Reserved        HREXPT    00FF
ININT     30F9            INSDBL    015F            INSERT    12C0            INVPAR    00C4            L         Reserved
LDATTR    06A2            LDPOSN    0650            LINCOL    0007            LINLEN    0033            LNBU      063A
LOOP      0163            LOOP0     0166            LOOP1     016E            M         Reserved        MASKB     0038
MASKBP    5C8E            MOVESZ    0840            NOSTRG    0608            PARAMS    5CC3            PARERR    0611
PRAMT     5CB4            PSW       Reserved        P$FLAG    5C91            RAMTOP    5CB2            RECLEN    1720
SCINIT    1701            SCRCTL    0028            SCRLB     002A IN         SCRLB0    0127            SCRLCT    002E
SCRLXT    0186            SCRL0     0141            SCROLL    0128 IN         SCRSZ     0018            SETCB0    0117
SETCUB    0009 IN         SETCUR    0113 IN         SETMDB    0025 IN         SETMD0    032A            SETMD1    0334
SETMD2    038A            SETMD3    039F            SETMOD    0311 IN         SETM21    0397            SET0      05F0
SP        Reserved        SPARE0    0011            SPARE1    0013            SPARE2    0015            SPARE3    0017
SPARE4    0030            STBLK     01B1            STBLK0    01B5            STBLK1    01B6            STKEND    5C65
STMDB0    030E            STPOSN    0655            STRGCT    003B            TESTAD    0151            TSTPAR    060C
TSTPR1    0615            TST01     05E8            TVFULQ    00C8            TVFUL1    00E4            UDG       5C7B
UPDATE    03A2            UPDATT    0665            UPDAT1    0684            UPDAT2    0690            UPDPOS    0628
VARS      5C4B            VICMOD    5CC2            VIMODE    0024            WRCHAR    0049 IN         WRCHRB    0001 IN
WRCHXT    00BC            WRCH0     0046            WRCH01    004C            WRCH11    0068            WRCH12    0073
WRCH13    0077            WRCH14    008D            WRCH15    008E            WRCH2     0096            WRCH3     009F
WRCH5     00A7            WRCH7     0083            WRSTLP    00F5            WRSTRB    0004 IN         WRSTRG    00F2 IN
WRSTR0    00EE            WRSTR3    00FF            WRSTX1    0108            WRSTX2    0114

     No errors detected
```

```
Cross reference listing (MREF version 4.7)

Symbol     Refs (# = definition  $ = write  <blank> = read)

ATTBYT     157#    557     1367    1412$
ATTMSK     166#   1369     1414$
ATTR_P      65#   1411
BOTLN      135#    268      732$
CALCA1    1403    1405#
CALCAT     429     546      677    1001    1004    1141    1144
                  1366     1396#
CALCPO     589     676     1309    1317#
CHNGVI      52#    772
CHRSET      49#    147      742
CHTBL      147#    201      590     743$
CH_ADD      61#    835      840$    846$    857$     962     875$
                   880$    1040    1045$   1048$   1059$
CLINIT      48#    737
CLRCTL     104#    481      738$
CLRSB0     107     480#
CLRSC0     441     493      497#
CLRSC1     510#    567
CLRSC2     519#
CLRSC3     522#    576
CLRSC4     524#    543
CLRSC5     533#
CLRSC7     518     570#
CLRSCB      40    107#
CLRSCN      38    483#
CLRSXT     565     568#
CONVFM     337     588      675     686    1296#
COORDS      64#    782$
COPER1     879#
COPERR     867     870      878#
COPY01     838     846#
COPY41     949     947#
COPY42     972     974#
COPYS0     166     834#
COPYS1     906#    989
COPYS2     931#
COPYS3     934#   1025
COPYS4     936#    956
COPYS5     916    1008#
COPYS6    1020#   1029
```

```
Cross reference listing (MREF version 4.7)

Symbol    Refs (# = definition  $ = write  <blank> = read)

COPYS7     927     1018     1026#
COPYSB      43      166#
COPYSC      43      860      885#
COPYWK     843#     848$     850$     852$     854$     858      859
                   1050$    1052$    1054$    1056$    1060     1061
COPYXT     962      990#
CURPOS     152#     685     1350$    1355
DATAB       96#     174      748$
DEST7       75#      76
DFADRS     154#    1351$    1356
DKMSPT      58#    1263$    1269$
DRIVES      72#      73       74
DTADR1     814#
DTADR2     812      821#
ENBLEX     765     1258#
ENBLMD     773     1267#
ERRRET     259#     263      280      786
EXCH0     1099#    1129
EXCH01    1043     1048#
EXCH1     1100#    1111
EXCHLP    1105     1145     1155#    1173
EXCHS0     167     1037#
EXCHSB      44      167#
EXCHSC      44     1064#
EXCHXT    1116     1130#
EXTNRM     759      763      785#
FIX         76#
FIXTBL      78#
FP2A        55#     872
FRFV       718      720      806#
GAERR     1183     1195     1197     1206#
GETAB0     115      671#
GETAT       41      115#
GET TT      39      674#
, TC1      689      695      697#
GETCB0     116      683#
GETCTL     112#     586      671      751$     752$
GETCUB      41      116#
GETCUR      39      684#
GETN1      871#
```

```
Cross reference listing (MREF version 4.7)

Symbol    Refs (# = definition  $ = write  <blank> = read)

GETN2      865      876#
GETN3      847      849      851      853      855      862#     876
                   1049     1051     1053     1055     1057
GETSTR     292      837     1042     1421#
GETVAL     766     1228#
GOODRE     258#     339      362      494      726      784      815
                    822     1006     1146
GRBLK      385      443#
GRPHST      50#     150      744
GRPST       50     1456#
GRTBL      150#     198      653      745$
GTADR1    1199     1203#
GTADRS     892      897     1086     1091     1181#
GTCH1      593#     656      663
GTCH2      596#     646
GTCH23     605      608#
GTCH3      601      612#
GTCH31     614#     620
GTCH32     633      635      637#
GTCH4      607      610      619      641#
GTCH5      652      657#
GTCH6      658      664#
GTCHAR      39      586#
GTCHB0     114      581#
GTCHRB      41      114#
GTINDX     159#     593$     603      630      650
GTSTR1    1426#    1435
GTSTR2    1430     1436#
HREXPT      57#    1259     1261$    1270     1272$
ININT       54#     871
INSDBL     386#
INSERT      73#     754
INVPAR     186      188      262#     355      358      360      487
                    490      492      721      809      881      888
                    890      893      898     1079     1081     1087
                   1092     1283
LDATTR     177      300      497     1408#
LDPOSN     181     1354#
LINCOL     100#     333      497$     749$     750$
LINLEN     151#     213      368$     502      687      736$     777
```

```
Cross reference listing (MREF version 4.7)

Symbol     Refs (# = definition  $ = write  <blank> = read)

                 1284      1296      1318
LNBU       371    505      1317      1327#
LOOP       389#   449
LOOP0      391#   408
LOOP1      398#
MASKB      155#   227      1371      1417$
MASK_P      66#  1413
MOVESZ      74#    75       755
MOSTRG    1428   1445#
PARAM$      71#  1421
PARERR    1282#  1287
PRAMT       69#
P_FLAG      67#  1415
RAMTOP      68#   760
RECLEN      53#  1432
SCINIT      47#   729
SCRCTL     119#   282       348       730$
SCRL0      284    36.       364#
SCRLB       40    122#
SCRLB0     122    346#
SCRLCT     140#   272       276$      281$      734$
SCRLXT     412    415#      470
SCROLL      38    350#
SCRSZ       46#   265       365       499       780      1300      1329
SET0      1232   1251#
SETCB0     103    331#
SETCUB      40    103#
SETCUR      38    335#
SETM21     770    772#
SETMD0     712    714       716       722#
SETMD1     729#
SETMD2     724    764#
SETMD3     776#   818       824
SETMDB      42    119#
SETMOD      42    708#
SPARE0     108#
SPARE1     109#
SPARE2     110#
SPARE3     111#
SPARE4     163#
```

```
Cross reference listing (MREF version 4.7)

Symbol     Refs (# = definition  $ = write  <blank> = read)

STBLK      377    451#
STBLK0     454#   466
STBLK1     455#
STKEND      62#   757
STMDB0     113    704#
STPOSN     257   1310      1349#
STRGCT     161#   322$      740$      741$
TESTAD     375#   414       473
TST01     1230   1246#
TSTPAR     336    587       674      1279#
TSTPR1    1281   1284#
TVFUL1     274    281#
TVFUL0     222    265#
UDG         63#   194       659
UPDAT1    1378   1381      1383#
UPDAT2    1384   1387      1389#
UPDATE     777#
UPDATT     252   1362#
UPDPOS     270    338       569       783      1307#
VARS        60#  1425
VIDMOD      70#   722       776$      806      1341
VIMODE     117#   706
WRCH0       97    172#
WRCH01     181#   304
WRCH11     193    198#
WRCH12     191    201#
WRCH13     197    200       202#
WRCH14     214    219#
WRCH15     218    220#
WRCH2      225#
WRCH3      230    232#
WRCH5      239#   249
WRCH7      250#
WRCHAR      38    176#
WRCHRB      40     97#
WRCHXT     257#
WRSTLP     301#   315
WRSTR0      98    292#
WRSTR3     309#   320
WRSTRB      40     98#
WRSTRG      38    300#
WRSTX1     307    318#
WRSTX2     325#
```

APPENDIX
C-5

APPLICATION DEVELOPMENT LIBRARY

Application Software Component

Date: 07 May 84

Version: 001_

ASC Number: 005

Author: David Boyle

Name: Sprite Graphics Support

Description: This component provides support for sprite graphics. A sprite is a graphical object which can be created and manipulated by a set of services to be described below. A sprite can be up to 256 x 256 characters in size, however at most 32 x 24 can be displayed. Each sprite is identified by a sprite-id, a number greater or equal to zero, and has the following properties:

> definition - a pointer to a width x height character bitmap, where width and height are user defined. A 1 indicates foreground color, a 0 indicates background color.
>
> position - the row, col location on the screen of the upper left corner of the sprite.
>
> color - the screen attribute (foreground color). A value of 0 indicates black, 1 indicates blue, etc.
>
> size - the width and height of the sprite (in characters).

The sprites graphics package assumes that the system variables area of memory is not used by an application. The

sprite support services can be invoked from machine code and BASIC. There is a BASIC interface routine, which takes as its parameter a BASIC string variable. The BASIC interface and sprite services code is loaded at SPRCODE, where SPRCODE = 0E000H. The name of this variable is specified by poking in the starting character at address SPRCODE-4. For example, if POKE SPRCODE-4, CODE "C" is executed, the variable C$ will be used to pass commands to the interface routine. This must be done before using any sprite services. The interface routine is invoked by LET <variable> = USR SPRCODE. The status code returned by the last sprite service executed is assigned to <variable>.

The BASIC interface routine causes the report "A: Invalid argument" to be produced whenever an illegal command or invalid argument to a command is found. If too few or too many arguments are given for some command, the report "Q: Parameter error" is produced. If the command string variable cannot be found, the report "C: Nonsense in BASIC" is produced. If there is not enough memory for the number of sprites specified, the report "4: Out of memory" is produced (see InitSprites). There exists a variable called COMMAND, at address SPRCODE-9, which contains the number of the last sprite command to be executed. Thus if an error occurs in a sprite command, this variable can be PEEKed to find out which command in the command string caused the error. The first command in the command string is command zero.

The machine code routines all return status codes in the BC register pair. If the value in C is 0, then no error occurred. In this case B contains a value indicating further status information. If an error occurred, C will contain an odd value (thus bit 0 is set).

The BASIC interface string variable contains sprite graphics commands, separated by spaces. The commands have the following syntax:

"<command letter><parameter list>"

where <command letter> is a single upper or lower case letter identifying the command:

i = Init_Sprites
S = InitScreen
C = Create_Sprite
W = Set_Autowrap_Mode
P = Put_Sprite
E = Erase_Sprite
M = Move_Sprite
L = Change_Sprite_Location
A = Change_Sprite_Attribute
O = Overlap?
H = Horizontal_Scroll
V = Vertical_Scroll

and where <parameter list> is a list of numbers separated by commas. The string assigned to C$ can be a string expression, i.e., "<substr>"+STR$(<expr>)+"<substr>". The semantics of these commands will be described in detail below.

Application Services

Name: Init_Sprites

Machine code interface:

```
     Inputs:  A = max-sprites, 0..255

     Outputs: BC = 0000h - OK
                 = 0001h - not enough memory

     Entry: SPRSVC = SPRCODE + 219H
```

BASIC interface:

```
     Inputs:  LET C$ = "I<max-sprites>"
```

Description: This service initializes the data structures used by the sprites services. Memory immediately below the sprites code is used for global variables and memory immediately below this is used to store sprite information. Each sprite takes up 8 bytes of data (not including its definition, which is stored elsewhere). Thus the total amount of memory used by the sprites package is:

8 bytes * max-sprites + 29 byte globals area + 2746 byte code area

If there is not enough memory between RAMTOP and the global variables area for the number of sprites specified, 0001h is returned. Thus, RAMTOP shuold be set to

SPRCODE - 29 - 8 max-sprites

before calling InitSprites. This service must be called before any of the others.

BASIC example: "I32" initializes memory for 32 sprites.

Name: Init_Screen

Machine code interface:

```
     Inputs:  A = screen_height, 0..24
         D = background_color, 0..7
         E = border_color, 0..7

     Outputs: BC = 0000h - OK
                 = 0007h - illegal screenht
                 = 0005h - illegal color

     Entry: SPRSVC + 200H
```

BASIC interface:

```
     Inputs:  LET C$ =
     "S<screen_ht>,<background_color>,<border_color>"
```

Description: This service clears the top screen_ht lines of the screen and sets their color to the background_color. The bottom 24-screen_ht lines are cleared and set to the border_color. The top screen_ht lines are used for displaying sprites. The remaining lines can be used for text display. The border is set to the border_color.

BASIC example: "S22,5,1" clears the top 22 lines and sets their color to cyan, clears the bottom two lines and sets their color to blue, and sets the border color to blue.

Name: Create_Sprite

Machine code interface:

```
     Inputs:  A = sprite-id, 0..max-sprites - 1
              B = width, 0..255
              C = height, 0..255
              D = color, 0..7
              HL = definition address, 0..64K-1

     Outputs: BC = 0000h - OK (sprite created)
                 = 0003h - illegal sprite-id

     Entry: SPRSVC + 5FH
```

BASIC interface:

```
     Inputs:  LET C$ =
     "C<sprite-id>,<width>,<height>,<color>,<addr>"
```

Description: This service creates a sprite with the specified width, height, color, and definition address. Initially, the position of the sprite is (0, 0). If there was already a sprite with the specified id, it is destroyed. In all further operations the new sprite is identified by its sprite-id.

BASIC example: "C0,2,2,2,32768" creates sprite 0 which is 2 x 2 characters in size, is red in color, and whose definition is located at 32768. The initial position of the sprite is (0, 0).

Name: Set_Autowrap_Mode

Machine code interface:

```
     Inputs:  A = mode: 0 - off, not 0 - on

     Outputs: BC = 0000h - OK

     Entry: SPRSVC + B0H
```

BASIC interface:

```
     Inputs:  LET C$ = "W<mode>"
```

Description: This service turns the Autowrap mode on and off. When the Autowrap mode is on, all changes to a sprite's location are made so that the new location is on the screen (wraparound).

BASIC example: "W1" causes Autowrap mode to be turned on.

Name: Put_Sprite

Machine code interface:

```
     Inputs:  A = sprite-id, 0..max-sprites - 1
              D = row, 0..255
              E = column, 0..255

     Outputs: BC = 0000h - OK, nothing overwritten
                   0100h - OK, something overwritten
                   0003h - illegal sprite-id
              D  = row
              E  = column

     Entry: SPRSVC + EEH
```

BASIC interface:

```
     Inputs:  LET C$ = "P<sprite-id>,<row>,<column>"
```

Description: This service writes a sprite on the screen. The row and column described above define the location at which the upper left corner of the sprite is written. If the Autowrap mode is set, the row and column values are modified to make sure that the sprite location is a legal screen location. The new row and column values are returned. If the Autowrap mode is not set, the position is not changed. However, only those parts of the sprite corresponding to legal screen positions will be displayed. If writing the sprite causes something on the screen to be overwritten, the appropriate code is returned.

BASIC example: "P0,11,0" puts sprite 0 at row 11, column 0. Anything already at that location is overwritten. If anything is overwritten, the interface routine returns 10h.

Name: Erase_Sprite

Machine code interface:

```
     Inputs:  A = sprite-id, 0..max-sprites - 1

     Outputs: BC = 0000h - OK (sprite erased)
                   0003h = illegal sprite-id

     Entry: SPRSVC + 198H
```

BASIC interface:

```
     Inputs:  LET C$ = "E<sprite-id>"
```

Description: This service erases a sprite. The screen becomes blank where the sprite used to be. The sprite still exists and can be written elsewhere.

BASIC example: "E0" erases sprite 0. The screen locations taken up by the sprite become blank.

Name: Move_Sprite

Machine code interface:

```
     Inputs:  A = sprite-id, 0..max-sprites - 1
              D = relative vertical motion, -128..127
              E = relative horizontal motion, -128..127

     Outputs: BC = 0000h - OK, nothing overwritten
                   0100h - OK, something overwritten
                   0003h - illegal sprite-id
              D = row
              E = column

     Entry: SPRSVC + 20DH
```

BASIC interface:

```
     Inputs:  LET C$ = "M<sprite-id>,<vert>,<hor>"
```

Description: This service moves a sprite. The sprite is erased at its current location and written at a new location defined by:

```
     new row = old row + relative vertical motion
     new col = old col + relative horizontal motion
```

The location of the sprite is updated to reflect the motion. As with the "P" command, if the sprite overwrites anything, 10h is returned. If Autowrap mode is set, then the location is automatically wrapped to fit onto the screen (i.e., (24, 0) becomes (0, 0)). The new row and column values are returned. If Autowrap mode is not set, only those parts of the sprite which correspond to legal screen locations will be displayed.

BASIC example: "M0,2,0" changes the position of the sprite from (11, 0) to (13, 0). This operation is equivalent to "E0 P0,13,0".

Name: Change_Sprite_Location

Machine code interface:

```
     Inputs:  A = sprite-id, 0..max-sprites - 1
              D = new row, 0..255
              E = new column, 0..255

     Outputs: BC = 0000h - OK (location changed)
                   0003h - illegal sprite-id

     Entry: SPRSVC + 237H
```

BASIC interface:

```
     Inputs:  LET C$ = "L<sprite-id>,<new-row>,<newcol>"
```

Description: This service updates the position property of a sprite in the same fashion as for Put_Sprite. The sprite is not updated on the screen until a Move_Sprite, Put_Sprite, or Erase_Sprite is executed.

BASIC example: "L0,13,0" will set the location of sprite 0 to (13, 0).

Name: Change_Sprite_Attribute

Machine code interface:

```
     Inputs:  A = sprite-id, 0..max-sprites - 1
              D = color, 0..7

     Outputs: BC = 0000h - OK (color changed)
                   0003h - illegal sprite-id
                   0005h - illegal color

     Entry: SPRSVC + 24DH
```

BASIC interface:

```
     Inputs:  LET C$ = "A<sprite-id>,<color>"
```

Description: This service updates the color property of a sprite. The sprite on the screen is not updated until a Put_Sprite, Move_Sprite, or Erase_Sprite is executed.

BASIC example: "A0,2" causes the color property of sprite 0 to be set to red.

Name: Overlap?

Machine code interface:

```
     Inputs:  D = sprite-id-1, 0..max-sprites - 1
              E = sprite-id-2, 0..max-sprites - 1

     Outputs: BC = 0000h - OK, no overlap
                   0200h - OK, overlap
                   0003h - illegal sprite-id

     Entry: SPRSVC + 26BH
```

BASIC interface:

```
     Inputs:  LET C$ = "O<sprite-id-1>,<sprite-id-2>"
```

Description: This service is used to detect if two sprites overlap.

BASIC example: "O0,1" causes the interface routine to return TBS if sprites 0 and 1 overlap on the screen.

Name: Vertical_Scroll

Machine code interface:

Inputs: A = direction: positive number - down,
negative number - up

Outputs: BC = 0000h - OK

Entry: SPRSVC + 558H

BASIC interface:

Inputs: LET C$ = "V<direction>"

Description: This service is used to scroll the entire screen in the vertical direction by one row. The direction of scroll is up if direction is less than 0, otherwise the scroll is down. The position property of all sprites is updated by one row to reflect the effect of the scroll. If Autowrap mode is not set, then 1 is added to the row value. If Autowrap mode is set, then 1 is added to the row value, and this new value is wrapped to fit on the screen.

BASIC example: "V1" causes the screen to scrolled down one row.

Name: Horizontal_Scroll

Machine code interface:

Inputs: A = direction: positive number - right,
negative number - left

Outputs: BC = 0000h - OK

Entry: SPRSVC + 3BDH

BASIC interface:

Inputs: LET C$ = "H<direction>"

Description: This service is used to scroll the entire screen in the horizontal direction by one column. The direction of scroll is to the left if direction is less than 0, otherwise the scroll is to the right. The position property of all sprites is updated by one column to reflect the effect of the scroll. If Autowrap mode is not set, then 1 is added to the column value. If Autowrap mode is set, then 1 is added to the column value, and this new value is wrapped to fit on the screen.

BASIC example: "H1" causes the screen to scrolled right one column.

APPENDIX C-5

```
=E000                                SECT CMDINT, ABS, LOC=0E000H
                                     NAME CMDINT
                                     SUBTTL  Command Interpreter module


            ;*************************************************************************
            ;
            ; Command interpreter module
            ;
            ; Inputs: none.
            ;
            ; Outputs: a Parameter Block (see below).
            ;
            ; Description: this module parses a sprites command string and, for
            ;              each recognized command, produces a parameter block
            ;              describing the command.  This parameter block is passed
            ;              to the interface handler module.  To parse a command
            ;              string first it must be found.  The global sprites
            ;              variable NAME contains the name of the string variable
            ;              containing the command string.  The ROM routine FIND_N
            ;              is used to find the variable in the VARS area of memory.
            ;              Note:  symbols in all upper case are external to this
            ;              module and are defined under Imports below.
            ;
            ;              Following is an architecture overview showing the relation
            ;              between the modules of the sprite services component of
            ;              the application development library:
            ;
            ;
            ;                                command
            ;                -----------     string    ---------------
            ;                |  BASIC  |---------->|   Command    |
            ;                | program |<----------| Interpreter |
            ;                -----------     Status    ---------------
            ;                                 Code         |          ^
            ;                                              |          |
            ;                          Parameter Block     |          |  Status Code
            ;                                              v          |
            ;                                           ---------------
            ;                                           |     I/F     |
            ;                                           |   Handler   |
            ;                                           ---------------
            ;                                              |          ^
            ;                           Register Values    |          |  Status Code
            ;                                              |          |
            ;                                              v          |
            ;              ------------ Reg values    ---------------
            ;              | assembly |------------>|    Sprite   |
            ;              | program  |<------------|   Services  |
            ;              ------------    Status     ---------------
            ;                               Code           |          ^
            ;                                              |          |
```

```
            ;                           Register Values    |          |  Status Code
            ;                                              |          |
            ;                                              v          |
            ;                                           ---------------
            ;                                           |  Low Level  |
            ;                                           | I/O Services|
            ;                                           ---------------
            ;
            ;
            ;
            ;              Note: the interface between the I/F Handler module and the
            ;              Sprite Services module is the same as the interface between
            ;              an assembly language program and the Sprite Services module.
            ;
            ;
            ;              Following is the layout in memory of the code and data used
            ;              by the sprite services component of the application
            ;              development library:
            ;
            ;
            ;                        ---------------------
            ;                        |                   |
            ;                        ---------------------<-- (UDG)
            ;                        |      sprites      |
            ;                        |       code        |
            ;                        ---------------------<-- SPRCODE
            ;                        |      sprites      |
            ;                        |      global       |
            ;                        |     variables     |
            ;                        ---------------------
            ;                        |      sprites      |
            ;                        |       data        |
            ;                        ---------------------<-- (SPRITES)
            ;                        |                   |
            ;                        |                   |
            ;                        |                   |
            ;                        ---------------------<-- (RAMTOP)
            ;                        |                   |
            ;                        |                   |
            ;                        |                   |
            ;                        |-------------------|
            ;                        | command string    |
            ;                        |-------------------|
            ;                        ---------------------<-- (VARS)
            ;
            ;*************************************************************************


            ; Imports

=5C3A       FLAGS           equ     5C3AH
=5C5D       CH_ADD          equ     5C5DH

```

```
          =0008                 105   ERROR           equ     8
          =30F9                 106   ININT           equ     30F9H
          =3160                 107   FP2BC           equ     3160H
          =2C70                 108   FIND_N          equ     2C70H
          =3009                 109   DIGIT           equ     3009H
                                110
                                111                   EXTERNAL  I_F_HANDLER
                                112
                                113
                                114   ; Globals
                                115
                                116                   INCLUDE  spritedef
                                117
                                118   ; Global constants
                                119
          =0018                 120   max_rows        equ     24              ;number of rows on the screen
          =0020                 121   max_cols        equ     32              ;number of columns on the screen
          =E000                 122   sprcode         equ     0E000H          ;location of sprites code
          =0010                 123   globallen       equ     29              ;length of global vars
                                124
                                125   ; Global variables
                                126
          =DFFE                 127   sprites         equ     sprcode-2       ;location of sprites data
          =DFFC                 128   name            equ     sprites-2       ;name of command string var.
          =DFFB                 129   gflags          equ     name-1          ;global flags
          =0000                 130   neg             equ     0               ;  bit 0 - parm < 0
          =0001                 131   autowrap        equ     1               ;  bit 1 - autowrap mode flag
          =DFFA                 132   max_sprites     equ     gflags-1        ;number of sprites allocated
          =DFF9                 133   screen_ht       equ     max_sprites-1   ;number of lines of screen used by
                                134                                           ;  sprites
          =DFF8                 135   backgcolor      equ     screen_ht-1     ;permanent background color
          =DFF7                 136   command         equ     backgcolor-1    ;number of command being executed
          =DFEB                 137   parms           equ     command-12      ;parameter block
          =DF23                 138   scratchpad      equ     parms-8         ;workspace area
                                139
                                140   ; Data structures
                                141
                                142   ; parameter block
          =DFEB                 143   svc_code        equ     parms           ;code identifying service
          =DFEC                 144   num_parms       equ     svc_code+1      ;number of parms found
          =DFED                 145   parm1           equ     num_parms+1     ;first parm
          =DFEF                 146   parm2           equ     parm1+2
          =DFF1                 147   parm3           equ     parm2+2
          =DFF3                 148   parm4           equ     parm3+2
          =DFF5                 149   parm5           equ     parm4+2         ;last possible parm
                                150
                                151   ; sprite data offsets
          =0000                 152   row             equ     0               ;row position
          =0001                 153   col             equ     row+1           ;column position
          =0002                 154   width           equ     col+1           ;sprite width
          =0003                 155   height          equ     width+1         ;sprite height
          =0004                 156   color           equ     height+1        ;sprite color
```

```
          =0005                 157   pbitmap         equ     color+1         ;definition address
          =0007                 158   sflags          equ     pbitmap+2       ;local sprite flags
          =0000                 159   alloc           equ     0               ;  bit 0 - allocated?
          =0001                 160   overwrite       equ     1               ;  bit 1 - sprite overwrote something
          =0002                 161   lhs             equ     2               ;  bit 2 - sprite in lower half screen
                                162
                                163
                                164
                                165   ; Locals
                                166
                                167   ; state names for parser
          =0000                 168   s0              equ     0
          =0001                 169   s1              equ     1
          =0002                 170   s2              equ     2
          =0003                 171   s_end           equ     3
          =00FF                 172   s_error         equ     0FFH
                                173
                                174
                                175   ;**********************************************************************
                                176   ;
                                177   ; CMDINT
                                178   ;
                                179   ; Inputs: none.
                                180   ;
                                181   ; Outputs: parameter block.
                                182   ;
                                183   ; Globals Read: none.
                                184   ;
                                185   ; Globals Written: name
                                186   ;                  command
                                187   ;                  gflags
                                188   ;                  parms
                                189   ;
                                190   ; Procedures Called: find_string
                                191   ;                    u_or_l_alpha
                                192   ;                    ERROR
                                193   ;                    letter
                                194   ;                    minus
                                195   ;                    digit
                                196   ;                    number
                                197   ;                    comma
                                198   ;                    space
                                199   ;                    I_F_HANDLER
                                200   ;
                                201   ; Procedures Called By: none.
                                202   ;
                                203   ; Description: this is the main routine of the command interpreter.
                                204   ;              The command string is located (using FIND_N) and is
                                205   ;              recognized by the following automaton:
                                206   ;
                                207   ;                                          comma
                                208   ;                    blank          minus---------
```

```
                        ;                 -----          -----|       |
                        ;                 |   |          |   |v       |
                        ;                 --> s0 ----------> s1 ----> s2 ------------> s_end
                        ;                     |  cmd letter  |  uint  |  space or eos
                        ;                     |              |        |
                        ;                     |              v        |
                        ;                     ---------> s_error <-----
                        ;
                        ;               where uint represents an unsigned integer and eos
                        ;               represents the end of the string.
                        ;
                        ;*********************************************************************


        =E000                           ORG      sprcode


E000    3E 24           cmdint          ld       a, '$'           ;put a "$" in the 2'nd byte of name
E002    32 DFFD                         ld       (name+1), a
E005    AF                              xor      a                ;initialize command variable
E006    32 DFF7                         ld       (command), a
E009    21 DFFB                         ld       hl, gflags
E00C    CB 86                           res      neg, (hl)        ;assume positive number until
                                                                  ;  shown otherwise
E00E    CD E092                         call     find_string      ;hl -> command string record
E011    23                              inc      hl               ;hl -> string length
E012    5E                              ld       e, (hl)
E013    23                              inc      hl
E014    56                              ld       d, (hl)          ;de = string length
E015    23                              inc      hl
E016    E5                              push     hl
E017    19                              add      hl, de
E018    EB                              ex       de, hl           ;de -> first byte after string
E019    E1                              pop      hl               ;hl -> first byte of string
E01A    06 00                           ld       b, s0            ;state <- s0
E01C    0E 00           while0          ld       c, 0             ;#parms <- 0
E01E    DD 21 DFED                      ld       ix, parm1        ;ix -> current parm
E022    3E 00                           ld       a, s0
E024    B8                              cp       b
E025    20 66                           jr       nz, endw0        ;state <> s0, so exit outer loop
E027    CB 78           while1          bit      7, b
E029    28 02                           jr       z, ok            ;state <> s_error, so continue
E02B    CF                              rst      ERROR            ;otherwise produce report "A"
E02C    09                              defb     9
E02D    3E 03           ok              ld       a, s_end
E02F    B8                              cp       b
E030    28 3B                           jr       z, endw1         ;state = s_end, so exit inner loop
E032    E5                              push     hl
E033    A7                              and      a
E034    ED 52                           sbc      hl, de
E036    E1                              pop      hl
E037    28 3D                           jr       z, do_cmd        ;at end of command string, so execute
```

```
E039    7E                              ld       a, (hl)          ;get next char
E03A    CD E0B9                         call     u_or_l_alpha
E03D    30 05                           jr       nc, not_alpha    ;jump if not upper or lower case letter
E03F    CD E0C8                         call     letter           ;otherwise handle letter
E042    18 E3                           jr       while1
E044    FE 2D           not_alpha       cp       '-'
E046    20 05                           jr       nz, not_minus    ;jump if not minus sign
E048    CD E10D                         call     minus            ;otherwise handle minus
E04B    18 DA                           jr       while1
E04D    CD 3009         not_minus       call     DIGIT
E050    38 05                           jr       c, not_digit     ;jump if not digit
E052    CD E121                         call     number           ;otherwise handle number
E055    18 D0                           jr       while1
E057    FE 2C           not_digit       cp       ','
E059    20 05                           jr       nz, not_comma    ;jump if not comma
E05B    CD E158                         call     comma            ;otherwise handle comma
E05E    18 C7                           jr       while1
E060    FE 20           not_comma       cp       ' '
E062    20 05                           jr       nz, bad_char     ;not a space either, so must be illegal
E064    CD E164                         call     space            ;handle space
E067    18 BE                           jr       while1
E069    06 FF           bad_char        ld       b, s_error       ;state <- s_error
E06B    18 BA                           jr       while1
E06D    E5              endw1           push     hl               ;here when exited inner loop
E06E    A7                              and      a
E06F    ED 52                           sbc      hl, de
E071    E1                              pop      hl
E072    28 02                           jr       z, do_cmd        ;at end of string, so execute
E074    06 00                           ld       b, s0            ;else more string left
E076    79              do_cmd          ld       a, c             ;fill in num_parms slot of parm block
E077    32 DFEC                         ld       (num_parms), a
E07A    C5                              push     bc
E07B    D5                              push     de
E07C    E5                              push     hl
E07D    CD 0001*                        call     I_F_HANDLER      ;invoke interface handler module
E080    C5                              push     bc               ;save status code in bc'
E081    D9                              exx
E082    C1                              pop      bc
E083    D9                              exx
E084    21 DFF7                         ld       hl, command      ;increment command counter
E087    34                              inc      (hl)
E088    E1                              pop      hl
E089    D1                              pop      de
E08A    C1                              pop      bc
E08B    18 8F                           jr       while0
E08D    D9              endw0           exx                       ;done with command string, so return
E08E    C5                              push     bc               ;  last status code in bc
E08F    D9                              exx
E090    C1                              pop      bc
E091    C9                              ret
```

```
                                ;********************************************************************
                                ;
                                ; FIND_STRING
                                ;
                                ; Inputs: name (see global variables).
                                ;
                                ; Outputs: hl -> record for string variable if found
                                ;
                                ; Globals Read: CH_ADD
                                ;               FLAGS
                                ;               name
                                ;
                                ; Globals Written: CH_ADD
                                ;                  FLAGS
                                ;
                                ; Procedures Called: FIND_N
                                ;                    ERROR
                                ;
                                ; Procedures Called By: cmdint
                                ;
                                ; Description: this routines attempts to find the record for a string
                                ;              variable with name equal to the value of NAME.  If found,
                                ;              HL is set to point to the length field of the record.  If
                                ;              the variable is not found, report "C" is produced.
                                ;
                                ;********************************************************************


E092    ED 4B 5C5D              find_string     ld      bc, (CH_ADD)    ;save CH_ADD
E096    C5                                      push    bc
E097    3A 5C3A                                 ld      a, (FLAGS)      ;save FLAGS
E09A    F5                                      push    af
E09B    01 0FFC                                 ld      bc, name
E09E    ED 43 5C5D                              ld      (CH_ADD), bc    ;set CH_ADD to point to name
E0A2    3E 80                                   ld      a, 80H
E0A4    32 5C3A                                 ld      (FLAGS), a      ;set runtime flag, reset others
E0A7    CD 2C70                                 call    FIND_N          ;find variable
E0AA    30 02                                   jr      nc, f_ok        ;jump if found variable
E0AC    CF                                      rst     ERROR           ;else produce report "C"
E0AD    0B                                      defb    0BH
E0AE    C1                      f_ok            pop     bc
E0AF    78                                      ld      a, b
E0B0    32 5C3A                                 ld      (FLAGS), a      ;restore FLAGS
E0B3    C1                                      pop     bc
E0B4    ED 43 5C5D                              ld      (CH_ADD), bc    ;restore CH_ADD
E0B8    C9                                      ret


                                ;********************************************************************
                                ;
                                ; U_OR_L_ALPHA
                                ;
```

```
                                ; Inputs: current character in A.
                                ;
                                ; Outputs: sets carry flag is current letter is an upper or lower case
                                ;          letter.  Otherwise, resets the carry flag.
                                ;
                                ; Globals Read: none.
                                ;
                                ; Globals Written: none.
                                ;
                                ; Procedures Called: none.
                                ;
                                ; Procedures Called By: cmdint
                                ;
                                ; Description: this routine checks if the current character is an upper
                                ;              or lower case letter.  If so, the carry flag is set.
                                ;              otherwise the carry flag is reset.  If the character is a
                                ;              lower case letter, it is converted to an upper case letter.
                                ;
                                ;********************************************************************


E0B9    FE 41                   u_or_l_alpha    cp      'A'             ;check if upper case letter
E0BB    3F                                      ccf
E0BC    D0                                      ret     nc              ;less than 'A', so return
E0BD    FE 5B                                   cp      'Z'+1
E0BF    D8                                      ret     c               ;is upper case letter
E0C0    FE 61                                   cp      'a'             ;check if lower case letter
E0C2    3F                                      ccf
E0C3    D0                                      ret     nc              ;less than 'a', so return
E0C4    FE 7B                                   cp      'z'+1
E0C6    D0                                      ret     nc              ;greater than 'z', so return
E0C7    D6 20                                   sub     'a'-'A'         ;convert to upper case
E0C9    37                                      scf                     ;set carry flag
E0CA    C9                                      ret


                                ;********************************************************************
                                ;
                                ; LETTER
                                ;
                                ; Inputs: current character in A.  The character is an upper case letter.
                                ;         hl = current string pointer.
                                ;         b  = parser state
                                ;
                                ; Outputs: svc_code in the parameter block.
                                ;          b = parser state
                                ;
                                ; Globals Read: none.
                                ;
                                ; Globals Written: parms
                                ;
                                ; Procedures Called: none.
```

```
                              417    ;
                              418    ; Procedures Called By: cmdint
                              419    ;
                              420    ; Description: this routine translates the current character, which is
                              421    ;              known to be a letter, into a code.  If this code = err,
                              422    ;              then the letter is not a legal command character.  In this
                              423    ;              case state is set to s_error.  Otherwise, the code is the
                              424    ;              service code appropriate to the command letter and is put
                              425    ;              into svc_code in the parameter block.  state is set to s1.
                              426    ;
                              427    ;*****************************************************************
                              428
                              429
        =00FF                 430    err             equ     0FFH
                              431
                              432
   E0CB    F5                 433    letter          push    af
   E0CC    3E 00              434                    ld      a, s0
   E0CE    B8                 435                    cp      b
   E0CF    28 04              436                    jr      z, l_ok0        ;state = s0, so ok
   E0D1    F1                 437                    pop     af
   E0D2    06 FF              438                    ld      b, s_error      ;otherwise, state is illegal
   E0D4    C9                 439                    ret
   E0D5    F1                 440    l_ok0           pop     af
   E0D6    D5                 441                    push    de
   E0D7    E5                 442                    push    hl
   E0D8    21 E0F3            443                    ld      hl, l_table     ;hl -> letter xlate table
   E0DB    D6 41              444                    sub     'A'
   E0DD    16 00              445                    ld      d, 0
   E0DF    5F                 446                    ld      e, a
   E0E0    19                 447                    add     hl, de          ;hl -> desired table entry
   E0E1    7E                 448                    ld      a, (hl)
   E0E2    FE FF              449                    cp      err
   E0E4    20 04              450                    jr      nz, l_ok1       ;code is ok, so jump
   E0E6    06 FF              451                    ld      b, s_error      ;else code is illegal
   E0E8    18 05              452                    jr      l_exit
   E0EA    32 DFEB            453    l_ok1           ld      (svc_code), a   ;otherwise put code in parm block
   E0ED    06 01              454                    ld      b, s1           ;state <- s1
   E0EF    E1                 455    l_exit          pop     hl
   E0F0    23                 456                    inc     hl              ;advance string pointer
   E0F1    D1                 457                    pop     de
   E0F2    C9                 458                    ret
                              459
                              460
   E0F3    07                 461    l_table         defb    7               ;Change_Sprite_Attribute
   E0F4    FF                 462                    defb    err
   E0F5    01                 463                    defb    1               ;Create_Sprite
   E0F6    FF                 464                    defb    err
   E0F7    04                 465                    defb    4               ;Erase_Sprite
   E0F8    FF                 466                    defb    err
   E0F9    FF                 467                    defb    err
   E0FA    0A                 468                    defb    10              ;Horizontal_Scroll
```

```
   E0FB    00                 469                    defb    0               ;Init_Sprites
   E0FC    FF                 470                    defb    err
   E0FD    FF                 471                    defb    err
   E0FE    06                 472                    defb    6               ;Change_Sprite_Location
   E0FF    05                 473                    defb    5               ;Move_Sprite
   E100    FF                 474                    defb    err
   E101    08                 475                    defb    8               ;Overlap?
   E102    03                 476                    defb    3               ;Put_Sprite
   E103    FF                 477                    defb    err
   E104    FF                 478                    defb    err
   E105    09                 479                    defb    9               ;Init_Screen
   E106    FF                 480                    defb    err
   E107    FF                 481                    defb    err
   E108    0B                 482                    defb    11              ;Vertical_Scroll
   E109    02                 483                    defb    2               ;Set_Autowrap_Mode
   E10A    FF                 484                    defb    err
   E10B    FF                 485                    defb    err
   E10C    FF                 486                    defb    err
                              487
                              488
                              489    ;*****************************************************************
                              490    ;
                              491    ; MINUS
                              492    ;
                              493    ; Inputs: hl = string pointer.
                              494    ;         b  = parser state.
                              495    ;
                              496    ; Outputs: b = parser state.
                              497    ;
                              498    ; Globals Read: gflags
                              499    ;
                              500    ; Globals Written: gflags
                              501    ;
                              502    ; Procedures Called: none.
                              503    ;
                              504    ; Procedures Called By: cmdint
                              505    ;
                              506    ; Description: if the state is not s1, sets state to s_error.  Otherwise,
                              507    ;              toggles bit neg of gflags and stays in state s1.
                              508    ;
                              509    ;*****************************************************************
                              510
                              511
   E10D    23                 512    minus           inc     hl              ;advance string pointer
   E10E    3E 01              513                    ld      a, s1
   E110    B8                 514                    cp      b
   E111    28 03              515                    jr      z, m_ok         ;state = s1, so ok
   E113    06 FF              516                    ld      b, s_error      ;otherwise state <- s_error
   E115    C9                 517                    ret
   E116    E5                 518    m_ok            push    hl
   E117    21 DFF8            519                    ld      hl, gflags
   E11A    7E                 520                    ld      a, (hl)
```

```
E11B   1F                            rra
E11C   3F                            ccf                        ;toggle bit neg
E11D   17                            rla
E11E   77                            ld      (hl), a
E11F   E1                            pop     hl
E120   C9                            ret


              ;**********************************************************************
              ;
              ; NUMBER
              ;
              ; Inputs: current string pointer in HL.
              ;         b = parser state.
              ;
              ; Outputs: a parameter in the parameter block.
              ;          b = parser state.
              ;
              ; Globals Read: CH_ADD
              ;               gflags
              ;
              ; Globals Written: CH_ADD
              ;                  gflags
              ;                  parms
              ;
              ; Procedures Called: ININT
              ;                    FP2BC
              ;
              ; Procedures Called By: cmdint
              ;
              ; Description: this routine converts the digit string starting at the
              ;              current value of the string pointer and ending with the
              ;              first non-digit character into an unsigned two byte number.
              ;              If the neg flag is set the 2's complememt is taken.  The
              ;              number is put into the current parm slot in the parm block.
              ;              The value of #parms is incrememted.  State becomes s2.
              ;
              ;**********************************************************************


E121   C5             number         push    bc
E122   D5                            push    de
E123   ED 5B 5C5D                    ld      de, (CH_ADD)    ;save CH_ADD
E127   D5                            push    de
E128   22 5C5D                       ld      (CH_ADD), hl    ;set CH_ADD to point to digit string
E12B   CD 30F9                       call    ININT           ;convert string to number. Number
                                                             ;  ends up on calculator stack.
E12E   E5                            push    hl
E12F   CD 3160                       call    FP2BC           ;put number in bc
E132   21 DFFB                       ld      hl, gflags
E135   CB 46                         bit     neg, (hl)
E137   28 07                         jr      z, pos
```

```
E139   78                            ld      a, b            ;here to convert to 2's complement
E13A   2F                            cpl
E13B   47                            ld      b, a
E13C   79                            ld      a, c
E13D   2F                            cpl
E13E   4F                            ld      c, a
E13F   03                            inc     bc
E140   CB 86          pos            res     neg, (hl)
E142   DD 71 00                      ld      (ix), c         ;put number into current parm slot
E145   DD 23                         inc     ix
E147   DD 70 00                      ld      (ix), b
E14A   DD 23                         inc     ix
E14C   E1                            pop     hl
E14D   D1                            pop     de
E14E   ED 53 5C5D                    ld      (CH_ADD), de    ;restore CH_ADD
E152   D1                            pop     de
E153   C1                            pop     bc
E154   0C                            inc     c               ;#parms <- #parms + 1
E155   06 02                         ld      b, s2           ;state <- s2
E157   C9                            ret


              ;**********************************************************************
              ;
              ; COMMA
              ;
              ; Inputs: current string pointer in HL.
              ;         b = parser state.
              ;
              ; Outputs: b = parser state.
              ;
              ; Globals Read: none.
              ;
              ; Globals Written: none.
              ;
              ; Procedures Called: none.
              ;
              ; Procedures Called By: cmdint
              ;
              ; Description: this routine recognizes a comma.  If state is s2, then
              ;              the comma is skipped and state becomes s1.  Otherwise
              ;              state becomes s_error.
              ;
              ;**********************************************************************


E158   3E 02          comma          ld      a, s2
E15A   B8                            cp      b
E15B   28 03                         jr      z, c_ok         ;if state = s2 then ok
E15D   06 FF                         ld      b, s_error      ;else state <- s_error
E15F   C9                            ret
E160   23             c_ok           inc     hl              ;advance string pointer
```

```
E161   06 01                      ld      b, s1           ;state <- s1
E163   C9                         ret


                   ;******************************************************************
                   ;
                   ; SPACE
                   ;
                   ; Inputs: current string pointer in HL.
                   ;          b = parser state.
                   ;
                   ; Outputs: b = parser state.
                   ;
                   ; Globals Read: none.
                   ;
                   ; Globals Written: none.
                   ;
                   ; Procedures Called: none.
                   ;
                   ; Procedures Called By: cmdint
                   ;
                   ; Description: this routine recognizes a space.  If state is s0, then
                   ;               the space is skipped and state remains s0.  Otherwise
                   ;               state becomes s_end.
                   ;
                   ;******************************************************************


E164   3E 00       space          ld      a, s0
E166   B8                         cp      b
E167   28 03                      jr      z, s_ok         ;if state = s0 then ok
E169   06 03                      ld      b, s_end        ;else state <- s_end
E16B   C9                         ret
E16C   23          s_ok           inc     hl              ;advance string pointer
E16D   C9                         ret


                                  end
```

```
A         Reserved      ALLOC     0000        AUTOWR    0001        B         Reserved      BACKGC    0FF8
BADSCM    E069          C         Reserved    CMSADD    0C50        CMDINT    E000          CCL       0001
COLOR     0004          COMMA     E158        COMMAN    0FF7        CSOK      E160          D         Reserved
DIGIT     3009          DOSCMD    E076        E         Reserved    ENDWO     E090          ENDW1     E060
ERR       00FF          ERROR     0008        FINDSN    0070        FINDSS    E092          FLAGS     5C3A
FP2BC     3160          FSCK      E0AE        GFLAGS    0FFB        GLOBAL    0010          H         Reserved
HEIGHT    0003          ININT     30F9        ISFSMA    0001 EX     L         Reserved      LETTER    E0C5
LHS       0002          LSEXIT    E0EF        LSOK0     E005        LSOK1     ECEA          LSTABL    E0F3
M         Reserved      MAXSCO    0020        MAXSRO    0018        MAXSSP    0FFA          MINUS     E100
MSOK      E116          NAME      0FFC        NEG       0000        NOTSAL    E044          NOTSCO    E060
NOTSDI    E057          NOTSMI    E040        NUMBER    E121        NUMSPA    0FEC          OK        E020
OVERWR    0001          PARMS     0FEB        PARM1     0FED        PARM2     0FEF          PARM3     0FF1
PARM4     0FF3          PARM5     0FF5        PBITMA    0005        POS       E140          PSW       Reserved
ROW       0000          SCRATC    0FE3        SCREEN    0FF9        SFLAGS    0007          SP        Reserved
SPACE     E164          SPRCOD    E000        SPRITE    0FFE        SVCSCO    0FE8          SSEND     0003
SSERRO    00FF          SSOK      E16C        S0        0000        S1        0001          S2        0002
USORSL    E089          WHILE0    E01C        WHILE1    E027        WIDTH     0002

      No errors detected
```

```
Cross reference listing (MREF version 4.7)

Symbol    Refs (# = definition  $ = write  <blank> = read)

ALLOC     159#
AUTOWR    131#
BACKGC    135#     136
BAD_CH    279      282#
CH_ADD    103#     341      346$     357$     563      565$     587$
CMDINT    226#
COL       153#     154
COLOR     156#     157
COMMA     276      619#
COMMAN    136#     137      229$     300
C_OK      621      624#
DIGIT     109#     270
DO_CMD    260      288      290#
ENDW0     248      306#
ENDW1     255      284#
ERR       430#     449      462      464      466      467      470
                   471      474      477      478      480      481
                   484      485      486
ERROR     105#     251      351
FIND_N    108#     349
FIND_S    233      341#
FLAGS     102#     343      348$     355$
FP2BC     107#     569
F_OK      350      353#
GFLAGS    129#     132      230      519      570
GLOBAL    123#
HEIGHT    155#     156
ININT     106#     566
I_F_HA    111#     295
LETTER    264      433#
LHS       161#
L_EXIT    452      455#
L_OK0     436      440#
L_OK1     450      453#
L_TABL    443      461#
MAX_CO    121#
MAX_RO    120#
MAX_SP    132#     133
MINUS     268      512#
M_OK      515      518#
```

```
Cross reference listing (MREF version 4.7)

Symbol    Refs (# = definition  $ = write  <blank> = read)

NAME      128#     129      227$     345
NEG       130#     231      571      580
NOT_AL    263      266#
NOT_CO    275      278#
NOT_DI    271      274#
NOT_MI    267      270#
NUMBER    272      561#
NUM_PA    144#     145      291$
OK        250      253#
OVERWR    160#
PARM1     145#     146      245
PARM2     146#     147
PARM3     147#     148
PARM4     148#     149
PARM5     149#
PARMS     137#     138      143
PBITMA    157#     158
POS       572      580#
ROW       152#     153
S0        168#     243      246      289      434      653
S1        169#     454      513      625
S2        170#     591      619
SCRATC    138#
SCREEN    133#     135
SFLAGS    158#
SPACE     280      653#
SPRCOD    122#     127      223
SPRITE    127#     128
SVC_CO    143#     144      653$
S_END     171#     253      656
S_ERRO    172#     282      438      451      516      622
S_OK      655      658#
U_OR_L    262      386#
WHILE0    244#     305
WHILE1    249#     265      269      273      277      281      283
WIDTH     154#     155
```

```
                                        NAME  IFHANDLER
                                        SUBTTL Interface handler module

                  ;******************************************************************
                  ;
                  ; Interface handler module
                  ;
                  ; Inputs: a parameter block.
                  ;
                  ; Outputs: a status code in BC.
                  ;
                  ; Description: this module translates a parameter block into a call to
                  ;               the appropriate sprite service.  The number of parameters
                  ;               specified in the parm block is checked against a table
                  ;               entry for the service containing the correct number of
                  ;               parameters.  If these values do not match, the report
                  ;               "C: Parameter error" is produced.  Otherwise the interface
                  ;               routine appropriate to the service is invoked.  This
                  ;               interface routine puts the values of the parms in the
                  ;               parm block into the appropriate registers.  The sprite
                  ;               service is then invoked.   When the service returns, the
                  ;               status code is checked and, if an error occurred, an
                  ;               appropriate report is produced.
                  ;
                  ;******************************************************************


                  ; Imports

=0008             ERROR           equ     8
=E219             INIT_SPRITES    equ     0E219H
=E4E9             INITSCREEN      equ     0E4E9H
=E278             CREATE_SPRITE   equ     0E278H
=E2C9             SET_AUTOWRAP    equ     0E2C9H
=E307             PUT_SPRITE      equ     0E307H
=E381             ERASE_SPRITE    equ     0E381H
=E426             MOVE_SPRITE     equ     0E426H
=E450             CH_LOC          equ     0E450H
=E466             CH_ATTR         equ     0E466H
=E484             OVERLAP         equ     0E484H
=E506             H_SCROLL        equ     0E506H
=E771             V_SCROLL        equ     0E771H



                  ; Globals

                                  INCLUDE spritedef

                  ; Global constants

=0018             max_rows        equ     24              ;number of rows on the screen
```

```
=0020             max_cols        equ     32              ;number of columns on the screen
=E000             sprcode         equ     0E000H          ;location of sprites code
=001D             globallen       equ     29              ;length of global vars

                  ; Global variables

=DFFE             sprites         equ     sprcode-2       ;location of sprites data
=DFFC             name            equ     sprites-2       ;name of command string var.
=DFFB             gflags          equ     name-1          ;global flags
=0000             neg             equ     0               ;  bit 0 - parm < 0
=0001             autowrap        equ     1               ;  bit 1 - autowrap mode flag
=DFFA             max_sprites     equ     gflags-1        ;number of sprites allocated
=DFF9             screen_ht       equ     max_sprites-1   ;number of lines of screen used by
                                                          ;  sprites
=DFF8             backgcolor      equ     screen_ht-1     ;permanent background color
=DFF7             command         equ     backgcolor-1    ;number of command being executed
=DFEB             parms           equ     command-12      ;parameter block
=DFE3             scratchpad      equ     parms-8         ;workspace area

                  ; Data structures

                  ; parameter block
=DFEB             svc_code        equ     parms           ;code identifying service
=DFEC             num_parms       equ     svc_code+1      ;number of parms found
=DFED             parm1           equ     num_parms+1     ;first parm
=DFEF             parm2           equ     parm1+2
=DFF1             parm3           equ     parm2+2
=DFF3             parm4           equ     parm3+2
=DFF5             parm5           equ     parm4+2         ;last possible parm

                  ; sprite data offsets
=0000             row             equ     0               ;row position
=0001             col             equ     row+1           ;column position
=0002             width           equ     col+1           ;sprite width
=0003             height          equ     width+1         ;sprite height
=0004             color           equ     height+1        ;sprite color
=0005             pbitmap         equ     color+1         ;definition address
=0007             sflags          equ     pbitmap+2       ;local sprite flags
=0000             alloc           equ     0               ;  bit 0 - allocated?
=0001             overwrite       equ     1               ;  bit 1 - sprite overwrote something
=0002             lhs             equ     2               ;  bit 2 - sprite in lower half screen



                  ;******************************************************************
                  ;
                  ; I_P_HANDLER
                  ;
                  ; Inputs: a parameter block.
                  ;
                  ; Outputs: a status code in BC.
                  ;
```

```
                ; Globals Read: parms
                ;
                ; Globals Written: none.
                ;
                ; Procedures Called: ERROR
                ;                    jmp_hl
                ;                    jmp_ix
                ;
                ; Procedures Called By: CMDINT
                ;
                ; Description: this is the main routine of this module.  It translates
                ;              the values in the parm block into a call to a sprite
                ;              service.  The interfaces to the sprite services are
                ;              described in a table.  For each service the is an entry
                ;              containing the correct number of parameters, the address
                ;              of the interface routine appropriate to that number of
                ;              parameters, and the address of the service.  The number
                ;              of parms in the table entry is check against the value in
                ;              the parm block.  If they do not agree, report "Q" is produced.
                ;              If they do agree, the interface routine indicated in the
                ;              table entry is called.  The service indicated in the table
                ;              entry is then called.   If the part of the status code in C
                ;              is non-zero, then an error occurred in executing the sprite
                ;              service, and an appropriate report is produced.
                ;
                ;*******************************************************************
     =E16E                             ORG      0E16EH

E16E'  3A 0FEB  i_f_handler    ld       a, (svc_code)   ;check num_parms against the
                                                        ;  value in i_f_table
E171'  47                      ld       b, a
E172'  CB 27                   sla      a
E174'  CB 27                   sla      a
E176'  80                      add      a, b            ;a = 5*svc_code
E177'  21 E185'                ld       hl, i_f_table
E17A'  5F                      ld       e, a
E17B'  16 00                   ld       d, 0
E17D'  19                      add      hl, de          ;hl -> table entry
E17E'  3A 0FEC                 ld       a, (num_parms)
E181'  BE                      cp       (hl)
E182'  28 02                   jr       z, ok           ;if num_parms correct, then jump
E184'  CF                      rst      ERROR           ;else produce report "Q"
E185'  19                      defb     25
E186'  23       ok             inc      hl              ;hl -> i/f routine addr
E187'  5E                      ld       e, (hl)
E188'  23                      inc      hl
E189'  56                      ld       d, (hl)
E18A'  23                      inc      hl
E18B'  EB                      ex       de, hl          ;hl = i/f routine addr
E18C'  1A                      ld       a, (de)         ;de -> service addr
E18D'  4F                      ld       c, a
E18E'  13                      inc      de
```

```
E18F'  1A                      ld       a, (de)
E190'  47                      ld       b, a
E191'  DD 21 0000              ld       ix, 0
E195'  DD 09                   add      ix, bc          ;ix = service addr
E197'  DD E5                   push     ix
E199'  DD 21 0FED              ld       ix, parm1       ;ix -> parameters
E19D'  CD E1B2'                call     jmp_hl          ;invoke i/f routine
E1A0'  DD E1                   pop      ix
E1A2'  CD E1B3'                call     jmp_ix          ;invoke sprite service
E1A5'  CB 41                   bit      0, c            ;check status code
E1A7'  C8                      ret      z               ;if c0 = 0, then no error
E1A8'  79                      ld       a, c
E1A9'  FE 01                   cp       1
E1AB'  20 02                   jr       nz, enough_room ;if c <> 1, then not out of room
E1AD'  CF                      rst      ERROR           ;else produce report "4"
E1AE'  03                      defb     3
E1AF'  CF       enough_room    rst      ERROR           ;produce report "A"
E1B0'  09                      defb     9
E1B1'  C9                      ret


                ;*******************************************************************
                ;
                ; JMP_HL
                ;
                ; Inputs: HL = address to be called.
                ;
                ; Outputs: none.
                ;
                ; Globals Read: none.
                ;
                ; Globals Written: none.
                ;
                ; Procedures Called: none.
                ;
                ; Procedures Called By: i_f_handler
                ;
                ; Description: this routine is called to call the routine whose entry
                ;              point is in HL.
                ;
                ;*******************************************************************


E1B2'  E9       jmp_hl         jp       (hl)


                ;*******************************************************************
                ;
                ; JMP_IX
                ;
                ; Inputs: IX = address to be called.
                ;
```

```
                        ; Outputs: none.
                        ;
                        ; Globals Read: none.
                        ;
                        ; Globals Written: none.
                        ;
                        ; Procedures Called: none.
                        ;
                        ; Procedures Called By: i_f_handler
                        ;
                        ; Description: this routine is called to call the routine whose entry
                        ;               point is in IX.
                        ;
                        ;*********************************************************************


E1B3'  DD E9            jmp_ix          jp      (ix)


                        ;This table contains the interface definitions for the sprite services.  The
                        ;  first item is the number of parameters to be passed to the service.  The
                        ;  second item is the interface routine for doing this.  The third item is the
                        ;  address of the service.

E1B5'  01               i_f_table       defb    1
E1B6'  E1F1'                            defw    i_f1
E1B8'  E219                             defw    INIT_SPRITES

E1BA'  05                               defb    5
E1BB'  E206'                            defw    i_f5
E1BD'  E278                             defw    CREATE_SPRITE

E1BF'  01                               defb    1
E1C0'  E1F1'                            defw    i_f1
E1C2'  E2C9                             defw    SET_AUTOWRAP

E1C4'  03                               defb    3
E1C5'  E1FC'                            defw    i_f3
E1C7'  E307                             defw    PUT_SPRITE

E1C9'  01                               defb    1
E1CA'  E1F1'                            defw    i_f1
E1CC'  E381                             defw    ERASE_SPRITE

E1CE'  03                               defb    3
E1CF'  E1FC'                            defw    i_f3
E1D1'  E426                             defw    MOVE_SPRITE

E1D3'  03                               defb    3
E1D4'  E1FC'                            defw    i_f3
E1D6'  E450                             defw    CH_LOC

```

```
E1D8'  02                               defb    2
E1D9'  E1F5'                            defw    i_f2
E1DB'  E466                             defw    CH_ATTR

E1DD'  02                               defb    2
E1DE'  E1F5'                            defw    i_f2
E1E0'  E484                             defw    OVERLAP

E1E2'  03                               defb    3
E1E3'  E1FC'                            defw    i_f3
E1E5'  E4E9                             defw    INITSCREEN

E1E7'  01                               defb    1
E1E8'  E1F1'                            defw    i_f1
E1EA'  E506                             defw    H_SCROLL

E1EC'  01                               defb    1
E1ED'  E1F1'                            defw    i_f1
E1EF'  E771                             defw    V_SCROLL


                        ;*********************************************************************
                        ;
                        ; I_F1
                        ;
                        ; Inputs: ix -> first parameter
                        ;
                        ; Outputs: a <- value of first parameter
                        ;
                        ; Globals Read: none.
                        ;
                        ; Globals Written: none.
                        ;
                        ; Procedures Called: none.
                        ;
                        ; Procedures Called By: i_f_handler
                        ;
                        ; Description: this is the interface routine for sprite services with
                        ;               one parameter.
                        ;
                        ;*********************************************************************


E1F1'  DD 7E 00         i_f1            ld      a, (ix)
E1F4'  C9                               ret


                        ;*********************************************************************
                        ;
                        ; I_F2
                        ;
                        ; Inputs: ix -> first parameter
                        ;
                        ; Outputs: a <- value of first parameter
                        ;          d <- value of second parameter
                        ;
                        ; Globals Read: none.
                        ;
                        ; Globals Written: none.
                        ;
                        ; Procedures Called: none.
                        ;
                        ; Procedures Called By: i_f_handler
                        ;
                        ; Description: this is the interface routine for sprite services with
                        ;              two parameters.
                        ;
                        ;**********************************************************************


E1F5'  DD 7E 00         i_f2            ld      a, (ix)
E1F8'  DD 56 02                         ld      d, (ix+2)
E1FB'  C9                               ret


                        ;**********************************************************************
                        ;
                        ; I_F3
                        ;
                        ; Inputs: ix -> first parameter
                        ;
                        ; Outputs: a <- value of first parameter
                        ;          d <- value of second parameter
                        ;          e <- value of third parameter
                        ;
                        ; Globals Read: none.
                        ;
                        ; Globals Written: none.
                        ;
                        ; Procedures Called: none.
                        ;
                        ; Procedures Called By: i_f_handler
                        ;
                        ; Description: this is the interface routine for sprite services with
                        ;              three parameters.
                        ;
                        ;**********************************************************************


E1FC'  DD 7E 00         i_f3            ld      a, (ix)
E1FF'  DD 56 02                         ld      d, (ix+2)
E202'  DD 5E 04                         ld      e, (ix+4)
E205'  C9                               ret

```

```

                        ;**********************************************************************
                        ;
                        ; I_F5
                        ;
                        ; Inputs: ix -> first parameter
                        ;
                        ; Outputs: a <- value of first parameter
                        ;          b <- value of second parameter
                        ;          c <- value of third parameter
                        ;          d <- value of fourth parameter
                        ;         hl <- value of fifth parameter
                        ;
                        ; Globals Read: none.
                        ;
                        ; Globals Written: none.
                        ;
                        ; Procedures Called: none.
                        ;
                        ; Procedures Called By: i_f_handler
                        ;
                        ; Description: this is the interface routine for sprite services with
                        ;              five parameters.
                        ;
                        ;**********************************************************************


E206'  DD 7E 00         i_f5            ld      a, (ix)
E209'  DD 46 02                         ld      b, (ix+2)
E20C'  DD 4E 04                         ld      c, (ix+4)
E20F'  DD 56 06                         ld      d, (ix+6)
E212'  DD 6E 08                         ld      l, (ix+8)
E215'  DD 66 09                         ld      h, (ix+9)
E218'  C9                               ret


                                        end
```

```
IFHANDLER       CRZ80/11 version 10.36.14       15-May-84  9:52:10       Page S-1
Interface handler module    IFHANDLER.SRC

A          Reserved        ALLOC     0000          AUTOWR     0001         B          Reserved        BACKGC    DFF8
C          Reserved        CH$ATT    E466          CH$LOC     E450         COL         0001           COLOR     0004
COMMAN     DFF7            CREATE    E278          D          Reserved     E          Reserved        ENOUGH    E1AF
ERASE$     E381            ERROR     0008          GFLAGS     DFFB         GLOBAL     0010            H         Reserved
HEIGHT     0003            H$SCRO    E506          INITSC     E4E9         INIT$S     E219            ISF$HA    E16E
ISF$TA     E185            ISF1      E1F1          ISF2       E1F5         ISF3       E1FC            ISF5      E206
JMP$HL     E1B2            JMP$IX    E183          L          Reserved     LHS        0002            M         Reserved
MAX$CO     0020            MAX$RO    0018          MAX$SP     DFFA         MOVE$S     E426            NAME      DFFC
NEG        0000            NUMSPA    DFEC          OK         E186         OVERLA     E484            OVERWR    0001
PARMS      DFE8            PARM1     DFED          PARM2      DFEF         PARM3      DFF1            PARM4     DFF3
PARM5      DFF5            PBITMA    0005          PSW        Reserved     PUT$SP     E307            ROW       0000
SCRATC     DFE3            SCREEN    DFF9          SET$AU     E2C9         SFLAGS     0007            SP        Reserved
SPRCOD     E000            SPRITE    DFFE          SVC$CO     DFEB         V$SCRO     E771            WIDTH     0002

     No errors detected
```

```
SPRSVC  CRZ80/11 version 10.36.14        15-May-84  9:51:11       Page 1
Sprite services module    SPRSVC.SRC

                                                         NAME   SPRSVC
                                                         SUBTTL  Sprite services module


                                         ;**************************************************************************
                                         ;
                                         ; Sprite Services module
                                         ;
                                         ; Inputs: registers set to parameter values for called service.
                                         ;
                                         ; Outputs: status code in BC: 0000 - OK
                                         ;                             0001 - not enough memory
                                         ;                             0003 - illegal sprite id
                                         ;                             0005 - illegal color
                                         ;                             0007 - illegal number-lines
                                         ;                             0100 - OK, something overwritten
                                         ;                             0200 - OK, overlap
                                         ;
                                         ; Description: this module implements the various sprite graphics services.
                                         ;              Upon entry to this module, the parameters to the desired
                                         ;              service are put into the appropriate registers.  A status
                                         ;              code is returned in BC (see above).
                                         ;
                                         ;**************************************************************************


                                         ; Imports (Note:  all symbols in upper case are imported)

                                         ;From the Home ROM

                                         ;Variables

          =5C3A                          Y                equ      5C3AH
          =5CB2                          RAMTOP           equ      5CB2H
          =5C36                          CHARS            equ      5C36H
          =5C8D                          ATTR_P           equ      5C8DH
          =5C8F                          ATTR_T           equ      5C8FH
          =5C3C                          TVFLAG           equ      5C3CH
          =5C48                          BORDCR           equ      5C48H
          =00FE                          BORDPT           equ      0FEH

                                         ;Routines

          =0582                          SET_AT           equ      0582H
          =0500                          SENDTV           equ      0500H
          =1230                          SELECT           equ      1230H
          =097F                          CLS_B            equ      097FH


                                         ;From module IOLOW

                                         ;Variables
```

```
                  
         =E890           CHTBL    equ     0E890H                    ;  Address of ROM Char.Table
                  
                         ;Services
                  
         =E89D           WRITE_CHAR       equ      0E89DH
         =E90E           SET_PRINT_POS    equ      0E90EH
         =E91F           GET_CHAR         equ      0E91FH
                  
                  
                         ; Globals
                  
                                          INCLUDE spritedef
                  
                         ; Global constants
                  
         =0018           max_rows         equ      24               ;number of rows on the screen
         =0020           max_cols         equ      32               ;number of columns on the screen
         =E000           sprcode          equ      0E000H           ;location of sprites code
         =001D           globallen        equ      29               ;length of global vars
                  
                         ; Global variables
                  
         =DFFE           sprites          equ      sprcode-2        ;location of sprites data
         =DFFC           name             equ      sprites-2        ;name of command string var.
         =DFFB           gflags           equ      name-1           ;global flags
         =0000           neg              equ      0                ;  bit 0 - parm < 0
         =0001           autowrap         equ      1                ;  bit 1 - autowrap mode flag
         =DFFA           max_sprites      equ      gflags-1         ;number of sprites allocated
         =DFF9           screen_ht        equ      max_sprites-1    ;number of lines of screen used by
                                                                    ;  sprites
         =DFF8           backgcolor       equ      screen_ht-1      ;permanent background color
         =DFF7           command          equ      backgcolor-1     ;number of command being executed
         =DFEB           parms            equ      command-12       ;parameter block
         =DFE3           scratchpad       equ      parms-8          ;workspace area
                  
                         ; Data structures
                  
                         ; parameter block
         =DFEB           svc_code         equ      parms            ;code identifying service
         =DFEC           num_parms        equ      svc_code+1       ;number of parms found
         =DFED           parm1            equ      num_parms+1      ;first parm
         =DFEF           parm2            equ      parm1+2
         =DFF1           parm3            equ      parm2+2
         =DFF3           parm4            equ      parm3+2
         =DFF5           parm5            equ      parm4+2          ;last possible parm
                  
                         ; sprite data offsets
         =0000           row              equ      0                ;row position
         =0001           col              equ      row+1            ;column position
         =0002           width            equ      col+1            ;sprite width
         =0003           height           equ      width+1          ;sprite height
```

```
         =0004           color            equ      height+1         ;sprite color
         =0005           pbitmap          equ      color+1          ;definition address
         =0007           sflags           equ      pbitmap+2        ;local sprite flags
         =0000           alloc            equ      0                ;  bit 0 - allocated?
         =0001           overwrite        equ      1                ;  bit 1 - sprite overwrote something
         =0002           lhs              equ      2                ;  bit 2 - sprite in lower half screen
                  
                  
                  
                         ;**************************************************************************
                         ;
                         ; INIT_SPRITES
                         ;
                         ; Inputs: A = number-sprites, the number of sprites for which memory is
                         ;              to be allocated.
                         ;
                         ; Outputs: BC = 0000 - OK
                         ;               0001 - not enough memory
                         ;
                         ; Globals Read: RAMTOP
                         ;
                         ; Globals Written: screen_ht
                         ;                  gflags
                         ;                  max_sprites
                         ;                  sprites
                         ;                  sprites data structure
                         ;
                         ; Procedures Called: none.
                         ;
                         ; Procedures Called By:  I_F_HANDLER
                         ;                        user program
                         ;
                         ; Description: this routines allocates memory for sprite data.  (max_sprites)
                         ;              is set to number-sprites.  One sprite requires 8 bytes of
                         ;              data.  If there is not enough free memory between (RAMTOP)
                         ;              and the sprites global variables, then 01 is returned.
                         ;              Otherwise, (sprites) is set to point to the start of the
                         ;              sprite data area and the sprite data is cleared.
                         ;
                         ;**************************************************************************
                  
         =E219                   ORG     0E219H
                  
                  
    E219'  21 DFF9       init_sprites     ld       hl, screen_ht    ;initialize screen_ht to 24
    E21C'  36 18                          ld       (hl), max_rows
    E21E'  21 DFFB                        ld       hl, gflags
    E221'  36 00                          ld       (hl), 0          ;clear global flags
    E223'  32 DFFA                        ld       (max_sprites), a
    E226'  4F                             ld       c, a             ;calc. where the sprite data
                                                                    ;  should go
    E227'  06 00                          ld       b, 0
```

```
E229'   A7                                   and     a
E22A'   CB 11                                rl      c
E22C'   CB 10                                rl      b
E22E'   CB 11                                rl      c
E230'   CB 10                                rl      b
E232'   CB 11                                rl      c
E234'   CB 10                                rl      b
E236'   C5                                   push    bc                ;bc = 8*number-sprites
E237'   21 E000                              ld      hl, sprcode
E23A'   A7                                   and     a
E23B'   ED 42                                sbc     hl, bc
E23D'   01 0010                              ld      bc, globallen
E240'   A7                                   and     a
E241'   ED 42                                sbc     hl, bc            ;hl -> start of sprite data
E243'   C1                                   pop     bc
E244'   ED 5B 5CB2                           ld      de, (RAMTOP)      ;see if there is enough free memory
E248'   E5                                   push    hl
E249'   A7                                   and     a
E24A'   ED 52                                sbc     hl, de
E24C'   E1                                   pop     hl
E24D'   30 04                                jr      nc, enough_room ;if enough room, then jump
E24F'   01 0001                              ld      bc, 0001          ;else return 01
E252'   C9                                   ret
E253'   22 DFFE            enough_room       ld      (sprites), hl
E256'   36 00              clear_loop        ld      (hl), 0           ;clear sprite data area
E258'   0B                                   dec     bc
E259'   23                                   inc     hl
E25A'   79                                   ld      a, c
E25B'   B1                                   or      c
E25C'   20 F8                                jr      nz, clear_loop
E25E'   C9                                   ret                       ;return 00


                           ;****************************************************************
                           ;
                           ; SPR_ADDR
                           ;
                           ; Inputs: A = sprite-id
                           ;
                           ; Outputs: IX <- address of sprite record for sprite sprite-id
                           ;
                           ; Globals Read: sprites
                           ;
                           ; Globals Written: none.
                           ;
                           ; Procedures Called: none.
                           ;
                           ; Procedures Called By: create_sprite
                           ;                       check_id
                           ;                       put_sprite
                           ;                       erase_sprite
                           ;                       ch_loc
```

```
                           ;                       ch_attr
                           ;                       overlap
                           ;                       upd_cols
                           ;                       upd_rows
                           ;
                           ; Description: this routine calculates the address of the start of the
                           ;              record for the sprite with id = sprite-id.  This address
                           ;              is returned in IX.  Note that each record is 8 bytes long.
                           ;
                           ;****************************************************************


E25F'   C5                 spr_addr          push    bc
E260'   06 00                                ld      b, 0
E262'   4F                                   ld      c, a
E263'   A7                                   and     a
E264'   CB 11                                rl      c
E266'   CB 10                                rl      b
E268'   CB 11                                rl      c
E26A'   CB 10                                rl      b
E26C'   CB 11                                rl      c
E26E'   CB 10                                rl      b                 ;bc = 8*sprite-id
E270'   DD 2A DFFE                           ld      ix, (sprites)     ;ix -> start of sprites data
E274'   DD 09                                add     ix, bc            ;ix -> start of record sprite-id
E276'   C1                                   pop     bc
E277'   C9                                   ret


                           ;****************************************************************
                           ;
                           ; CREATE_SPRITE
                           ;
                           ; Inputs: A = sprite-id
                           ;         B = width
                           ;         C = height
                           ;         D = color
                           ;        HL = address of bitmap
                           ;
                           ; Outputs: BC = 0000 - OK
                           ;             = 0003 - illegal sprite-id
                           ;             = 0005 - illegal color
                           ;
                           ; Globals Read: sprites
                           ;
                           ; Globals Written: sprite data structure
                           ;
                           ; Procedures Called: spr_addr
                           ;
                           ; Procedures Called By: I_P_HANDLER
                           ;                       user program
                           ;
                           ; Description: this routine initializes a record for the sprite identified
```

```
                                   261    ;               by sprite-id.  If the sprite-id parameter is not less than
                                   262    ;               (max_sprites), then it is illegal and 03 is returned in BC.
                                   263    ;               If the color parameter is greater than 7, then it is
                                   264    ;               illegal and 05 is returned in BC.  If the parameters are
                                   265    ;               legal, then the slots of the record are filled in and the
                                   266    ;               alloc flag of sflags is set to indicate that the record has
                                   267    ;               been filled in.
                                   268    ;
                                   269    ;*****************************************************************
                                   270
                                   271
   E278'  E5                       272    create_sprite   push    hl              ;validate sprite-id < (max_sprites)
   E279'  21 DFFA                  273                    ld      hl, max_sprites
   E27C'  BE                       274                    cp      (hl)
   E27D'  E1                       275                    pop     hl
   E27E'  38 04                    276                    jr      c, id_ok        ;if sprite-id ok, then jump
   E280'  01 0003                  277                    ld      bc, 0003        ;else return 03 in BC
   E283'  C9                       278                    ret
   E284'  F5                       279    id_ok           push    af              ;validate color < 8
   E285'  3E 07                    280                    ld      a, 7
   E287'  BA                       281                    cp      d
   E288'  30 05                    282                    jr      nc, color_ok    ;if color ok, then jump
   E28A'  F1                       283                    pop     af
   E28B'  01 0005                  284                    ld      bc, 0005        ;else return 05 in BC
   E28E'  C9                       285                    ret
   E28F'  F1                       286    color_ok        pop     af
   E290'  CD E25F'                 287                    call    spr_addr        ;ix -> start of sprite record
   E293'  DD 36 00 00              288                    ld      (ix+row), 0     ;row <- 0
   E297'  DD 36 01 00              289                    ld      (ix+col), 0     ;col <- 0
   E29B'  DD 70 02                 290                    ld      (ix+width), b   ;width <- b
   E29E'  DD 71 03                 291                    ld      (ix+height), c  ;height <- c
   E2A1'  DD 72 04                 292                    ld      (ix+color), d   ;color <- d
   E2A4'  DD 75 05                 293                    ld      (ix+pbitmap), l ;pbitmap <- hl
   E2A7'  DD 74 06                 294                    ld      (ix+pbitmap+1), h
   E2AA'  DD CB 07 C6              295                    set     alloc, (ix+sflags)      ;mark record as initialized
   E2AE'  01 0000                  296                    ld      bc, 0           ;return 00 in BC
   E2B1'  C9                       297                    ret
                                   298
                                   299
                                   300    ;*****************************************************************
                                   301    ;
                                   302    ; CHECK_ID
                                   303    ;
                                   304    ; Inputs: A = sprite-id
                                   305    ;
                                   306    ; Outputs: CF is set if sprite-id is legal, reset if it is illegal
                                   307    ;
                                   308    ; Globals Read: sprites
                                   309    ;               sprite data structure
                                   310    ;
                                   311    ; Globals written: none.
                                   312    ;
```

```
                                   313    ; Procedures Called: spr_addr
                                   314    ;
                                   315    ; Procedures Called By: put_sprite
                                   316    ;                       erase_sprite
                                   317    ;                       ch_loc
                                   318    ;                       ch_attr
                                   319    ;                       overlap
                                   320    ;
                                   321    ; Description: this routine checks (1) that sprite-id is in the range
                                   322    ;              [0..max_sprites-1] and (2) that the record for that
                                   323    ;              sprite-id has been initialized.
                                   324    ;
                                   325    ;*****************************************************************
                                   326
                                   327
   E2B2'  DD E5                    328    check_id        push    ix
   E2B4'  E5                       329                    push    hl              ;validate sprite-id < (max_sprites)
   E2B5'  21 DFFA                  330                    ld      hl, max_sprites
   E2B8'  BE                       331                    cp      (hl)
   E2B9'  E1                       332                    pop     hl
   E2BA'  D0                       333                    ret     nc              ;sprite-id out of range
   E2BB'  CD E25F'                 334                    call    spr_addr
   E2BE'  DD CB 07 0E              335                    rrc     (ix+sflags)
   E2C2'  DD CB 07 06              336                    rlc     (ix+sflags)     ;alloc flag is now in carry flag
   E2C6'  DD E1                    337                    pop     ix
   E2C8'  C9                       338                    ret
                                   339
                                   340
                                   341    ;*****************************************************************
                                   342    ;
                                   343    ; SET_AUTOWRAP
                                   344    ;
                                   345    ; Inputs: A = 0 - off
                                   346    ;            <> 0 - on
                                   347    ;
                                   348    ; Outputs: BC = 0000 - OK
                                   349    ;
                                   350    ; Globals Read: none.
                                   351    ;
                                   352    ; Globals Written: gflags
                                   353    ;
                                   354    ; Procedures Called: none.
                                   355    ;
                                   356    ; Procedures Called By: I_F_HANDLER
                                   357    ;                       user program
                                   358    ;
                                   359    ; Description: this routines sets the autowrap flag according to the
                                   360    ;              value of A.  If A = 0, the flag is reset, otherwise
                                   361    ;              the flag is set.
                                   362    ;
                                   363    ;*****************************************************************
                                   364
```

```
                                365
     E2C9'  E5                  366   set_autowrap     push    hl
     E2CA'  21 DFF8             367                    ld      hl, gflags
     E2CD'  A7                  368                    and     a
     E2CE'  28 04               369                    jr      z, off          ;if A = 0, then jump
     E2D0'  CB CE               370                    set     autowrap, (hl)  ;else turn flag on
     E2D2'  18 02               371                    jr      sa_exit
     E2D4'  CB 8E               372   off              res     autowrap, (hl)
     E2D6'  E1                  373   sa_exit          pop     hl
     E2D7'  01 0000             374                    ld      bc, 0           ;return 00 in BC
     E2DA'  C9                  375                    ret
                                376
                                377
                                378   ;*******************************************************************
                                379   ;
                                380   ; DISPLAY_CHAR
                                381   ;
                                382   ; Inputs: B = row
                                383   ;         C = column
                                384   ;         DE = location of dot pattern for char to be written
                                385   ;
                                386   ; Outputs: DE = location of next char
                                387   ;
                                388   ; Globals Read: none.
                                389   ;
                                390   ; Globals Written: CHTBL
                                391   ;
                                392   ; Procedures Called: SET_PRINT_POS
                                393   ;                    WRITE_CHAR
                                394   ;
                                395   ; Procedures Called By: put_sprite
                                396   ;                       erase_sprite
                                397   ;
                                398   ; Description: this routine displays the specified character at the
                                399   ;              specified screen location.
                                400   ;
                                401   ;*******************************************************************
                                402
                                403
     E2DB'  E5                  404   display_char     push    hl
     E2DC'  C5                  405                    push    bc
     E2DD'  C5                  406                    push    bc
     E2DE'  CD E90E             407                    call    SET_PRINT_POS   ;set the print position to BC
     E2E1'  C1                  408                    pop     bc
     E2E2'  3E 20               409                    ld      a, ' '
     E2E4'  ED 53 E890          410                    ld      (CHTBL), de     ;replace (CHTBL) with loc of char
     E2E8'  C5                  411                    push    bc
     E2E9'  CD E890             412                    call    WRITE_CHAR      ;write the character
     E2EC'  C1                  413                    pop     bc
     E2ED'  21 0008             414                    ld      hl, 8           ;advance the bitmap pointer
     E2F0'  19                  415                    add     hl, de
     E2F1'  EB                  416                    ex      de, hl
```

```
     E2F2'  21 3C00             417                    ld      hl, 3C00h
     E2F5'  22 E890             418                    ld      (CHTBL), hl     ;restore (CHTBL) to orignal value
     E2F8'  C1                  419   dc_exit          pop     bc
     E2F9'  E1                  420                    pop     hl
     E2FA'  C9                  421                    ret
                                422
                                423
                                424   ;*******************************************************************
                                425   ;
                                426   ; VISIBLE
                                427   ;
                                428   ; Inputs: B = row
                                429   ;         C = column
                                430   ;
                                431   ; Outputs: CF set if BC is a legal screen location, otherwise CF is reset
                                432   ;
                                433   ; Globals Read: screen_ht
                                434   ;
                                435   ; Globals Written: none.
                                436   ;
                                437   ; Procedures Called: none.
                                438   ;
                                439   ; Procedures Called By: put_sprite
                                440   ;                       erase_sprite
                                441   ;
                                442   ; Description: this routine checks that the specified row and column
                                443   ;              lie within the legal ranges for the screen width and
                                444   ;              height.  If so, the carry flag is set, otherwise it is
                                445   ;              reset.
                                446   ;
                                447   ;*******************************************************************
                                448
                                449
     E2FB'  3A DFF9             450   visible          ld      a, (screen_ht)  ;is 0 <= row <= (screen_ht)-1
     E2FE'  3D                  451                    dec     a
     E2FF'  B8                  452                    cp      b
     E300'  3F                  453                    ccf
     E301'  D0                  454                    ret     nc              ;no, so return
     E302'  3E 1F               455                    ld      a, max_cols-1   ;is 0 <= col <= max_cols-1
     E304'  B9                  456                    cp      c
     E305'  3F                  457                    ccf
     E306'  C9                  458                    ret                     ;return result of second test
                                459
                                460
                                461   ;*******************************************************************
                                462   ;
                                463   ; PUT_SPRITE
                                464   ;
                                465   ; Inputs: A = sprite-id
                                466   ;         D = row
                                467   ;         E = column
                                468   ;
```

```
                        ; Outputs: BC = 0000 - OK, nothing overwritten
                        ;             = 0100 - OK, something overwritten
                        ;             = 0003 - illegal sprite-id
                        ;
                        ; Globals Read: sprite data structure
                        ;               backgcolor
                        ;               gflags
                        ;               screen_ht
                        ;
                        ; Globals Written: sprite data structure
                        ;                  ATTR_P
                        ;
                        ; Procedures Called: check_id
                        ;                    spr_addr
                        ;                    SELECT
                        ;                    visible
                        ;                    GET_CHAR
                        ;                    display_char
                        ;
                        ; Procedures Called By: move_sprite
                        ;                       upd_cols
                        ;                       upd_rows
                        ;                       I_F_HANDLER
                        ;                       user program
                        ;
                        ; Description: this routine writes the specified sprite to the screen.
                        ;              If autowrap mode is set, then the specified row and column
                        ;              are wrapped to fit onto the screen size.  If autowrap
                        ;              mode is not set, then only the portion of the sprite
                        ;              which is visible on the screen will be written.
                        ;
                        ;**************************************************************************


E307'  F5               put_sprite      push    af
E308'  D5                               push    de
E309'  E5                               push    hl
E30A'  F3                               di
E30B'  CD E2B2'                         call    check_id        ;validate sprite-id
E30E'  38 06                            jr      c, p_id_ok      ;sprite-id ok, so jump
E310'  01 0003                          ld      bc, 0003        ;else return 03 in BC
E313'  C3 E39B'                         jp      p_exit
E316'  CD E25F'         p_id_ok         call    spr_addr        ;get location of sprite record
E319'  3E 02                            ld      a, 2            ;select stream 2
E31B'  D5                               push    de
E31C'  CD 1230                          call    SELECT
E31F'  D1                               pop     de
E320'  DD 6E 05                         ld      l, (ix+pbitmap) ;hl -> sprite bitmap
E323'  DD 66 06                         ld      h, (ix+pbitmap+1)
E326'  42                               ld      b, d            ;b = row
E327'  4B                               ld      c, e            ;c = col
E328'  DD 70 00                         ld      (ix+row), b     ;store sprite position
```

```
E32B'  DD 71 01                         ld      (ix+col), c
E32E'  3A DFF9                          ld      a, (backgcolor)
E331'  E6 F8                            and     11111000b
E333'  DD B6 04                         or      (ix+color)
E336'  32 5C8D                          ld      (ATTR_P), a     ;set attr to screen background color
                                                                ;  and sprite foreground color
E339'  11 0100                          ld      de, 100h
E33C'  A7                               and     a
E33D'  ED 52                            sbc     hl, de
E33F'  EB                               ex      de, hl          ;de -> first scan of sprite bitmap
                                                                ;  minus 100h, acts like (CHARS)
E340'  2E 00                            ld      l, 0            ;l = row count
E342'  C5                               push    bc
E343'  E3               outerl          ex      (sp), hl
E344'  4D                               ld      c, l            ;c <- leftmost column of sprite
E345'  E3                               ex      (sp), hl
E346'  26 00                            ld      h, 0            ;h = column count
E348'  CD E2F8'         innerl          call    visible         ;is BC a legal screen location?
E34B'  38 20                            jr      c, wrtchar      ;yes, so jump
E34D'  3A DFF8                          ld      a, (gflags)     ;is autowrap mode set?
E350'  CB 4F                            bit     autowrap, a
E352'  28 36                            jr      z, nextchar     ;if not autowrap mode then jump
E354'  3E 1F            col_loop        ld      a, max_cols-1   ;map current column onto screen
E356'  B9                               cp      c
E357'  30 06                            jr      nc, ckrowl
E359'  79                               ld      a, c
E35A'  D6 20                            sub     max_cols
E35C'  4F                               ld      c, a
E35D'  18 F5                            jr      col_loop
E35F'  E5               ckrowl          push    hl
E360'  21 DFF9                          ld      hl, screen_ht
E363'  7E                               ld      a, (hl)         ;map current row onto screen
E364'  3D                               dec     a
E365'  B8               row_loop        cp      b
E366'  30 07                            jr      nc, contl
E368'  08                               ex      af, af'
E369'  78                               ld      a, b
E36A'  96                               sub     (hl)
E36B'  47                               ld      b, a
E36C'  08                               ex      af,af'
E36D'  18 F6                            jr      row_loop
E36F'  E1               contl           pop     hl
E370'  7C                               ld      a, h
E371'  B5                               or      l
E372'  20 06                            jr      nz, no_store
E374'  DD 70 00                         ld      (ix+row), b     ;first time through loops, store
E377'  DD 71 01                         ld      (ix+col), c     ;  wrapped screen location
E37A'                   no_store
E37A'  C5               wrtchar         push    bc
E37B'  CD E91F                          call    GET_CHAR        ;check if writing the char will
E37E'  C1                               pop     bc              ;  overwrite something
E37F'  FE 20                            cp      ' '
```

```
     E381'  28 04                 573                     jr      z, no_overwrite
     E383'  DD CB 07 CE           574                     set     overwrite, (ix+sflags)  ;save fact that something
                                  575                                                     ;  was overwritten
     E387'  CD E20B'              576     no_overwrite    call    display_char
     E38A'  0C                    577     nextchar        inc     c               ;increment column position
     E38B'  24                    578                     inc     h               ;incremtnt column count
     E38C'  DD 7E 02              579                     ld      a, (ix+width)
     E38F'  BC                    580                     cp      h
     E390'  20 B6                 581                     jr      nz, inner1      ;jump if more columns to write
     E392'  04                    582                     inc     b               ;else increment row position
     E393'  2C                    583                     inc     l               ;increment row count
     E394'  DD 7E 03              584                     ld      a, (ix+height)
     E397'  BD                    585                     cp      l
     E398'  20 A9                 586                     jr      nz, outer1      ;jump if more rows to write
     E39A'  C1                    587                     pop     bc
     E39B'  FB                    588     p_exit          ei
     E39C'  E1                    589                     pop     hl
     E39D'  D1                    590                     pop     de
     E39E'  F1                    591                     pop     af
     E39F'  DD CB 07 4E           592                     bit     overwrite, (ix+sflags)
     E3A3'  DD CB 07 8E           593                     res     overwrite, (ix+sflags)
     E3A7'  20 04                 594                     jr      nz, ovrwrote    ;sprite overwrote something
     E3A9'  01 0000               595                     ld      bc, 0           ;return 00 in BC, nothing overwritten
     E3AC'  C9                    596                     ret
     E3AD'  01 0100               597     ovrwrote        ld      bc, 0100H
     E3B0'  C9                    598                     ret
                                  599
                                  600
                                  601     ;******************************************************************
                                  602     ;
                                  603     ; ERASE_SPRITE
                                  604     ;
                                  605     ; Inputs: A = sprite-id
                                  606     ;
                                  607     ; Outputs: BC = 0000 - OK
                                  608     ;             = 0003 - illegal sprite-id
                                  609     ;
                                  610     ; Globals Read: sprite data structure
                                  611     ;               backgcolor
                                  612     ;               gflags
                                  613     ;               screen_ht
                                  614     ;               CHARS
                                  615     ;
                                  616     ; Globals Written: sprite data structure
                                  617     ;                  ATTR_T
                                  618     ;                  CHARS
                                  619     ;
                                  620     ; Procedures Called: check_id
                                  621     ;                    spr_addr
                                  622     ;                    SELECT
                                  623     ;                    visible
                                  624     ;                    display_char
```

```
                                  625     ;
                                  626     ; Procedures Called By: move_sprite
                                  627     ;                       I_F_HANDLER
                                  628     ;                       user program
                                  629     ;
                                  630     ; Description: this routine erases the specified sprite.  The screen
                                  631     ;              locations at which the sprite resides are replaced with
                                  632     ;              blanks.
                                  633     ;
                                  634     ;******************************************************************
                                  635
                                  636
     E3B1'  F5                    637     erase_sprite    push    af
     E3B2'  D5                    638                     push .  de
     E3B3'  E5                    639                     push    hl
     E3B4'  F3                    640                     di
     E3B5'  CD E2B2'              641                     call    check_id        ;validate sprite-id
     E3B8'  38 06                 642                     jr      c, e_id_ok      ;sprite-id ok, so jump
     E3BA'  01 0003               643                     ld      bc, 0003        ;else return 03 in BC
     E3BD'  C3 E421'              644                     jp      e_exit
     E3C0'  CD E25F'              645     e_id_ok         call    spr_addr        ;get location of sprite record
     E3C3'  3E 02                 646                     ld      a, 2            ;select stream 2
     E3C5'  D5                    647                     push    de
     E3C6'  CD 1230               648                     call    SELECT
     E3C9'  D1                    649                     pop     de
     E3CA'  DD 46 00              650                     ld      b, (ix+row)     ;b = row
     E3CD'  DD 4E 01              651                     ld      c, (ix+col)     ;c = col
     E3D0'  3A DFF8               652                     ld      a, (backgcolor)
     E3D3'  32 5C8F               653                     ld      (ATTR_T), a     ;set attr to screen background color
     E3D6'  2E 00                 654                     ld      l, 0            ;l = row count
     E3D8'  C5                    655                     push    bc
     E3D9'  E3                    656     outer2          ex      (sp), hl
     E3DA'  4D                    657                     ld      c, l            ;c <- leftmost column of sprite
     E3DB'  E3                    658                     ex      (sp), hl
     E3DC'  26 00                 659                     ld      h, 0            ;h = column count
     E3DE'  CD E2F8'              660     inner2          call    visible         ;is BC a legal screen location?
     E3E1'  38 23                 661                     jr      c, era_char     ;yes, so jump
     E3E3'  3A DFF8               662                     ld      a, (gflags)     ;is autowrap mode set?
     E3E6'  CB 4F                 663                     bit     autowrap, a
     E3E8'  28 23                 664                     jr      z, nxtchar      ;if not autowrap mode then jump
     E3EA'  3E 1F                 665     c_loop          ld      a, max_cols-1   ;map current column onto screen
     E3EC'  B9                    666                     cp      c
     E3ED'  30 06                 667                     jr      nc, ckrow2
     E3EF'  79                    668                     ld      a, c
     E3F0'  D6 20                 669                     sub     max_cols
     E3F2'  4F                    670                     ld      c, a
     E3F3'  18 F5                 671                     jr      c_loop
     E3F5'  E5                    672     ckrow2          push    hl
     E3F6'  21 DFF9               673                     ld      hl, screen_ht
     E3F9'  7E                    674                     ld      a, (hl)         ;map current row onto screen
     E3FA'  3D                    675                     dec     a
     E3FB'  B8                    676     r_loop          cp      b
```

```
E3FC'  30 07                            jr      nc, cont2
E3FE'  08                               ex      af, af'
E3FF'  78                               ld      a, b
E400'  96                               sub     (hl)
E401'  47                               ld      b, a
E402'  08                               ex      af,af'
E403'  18 F6                            jr      r_loop
E405'  E1               cont2           pop     hl
E406'  ED 5B 5C36       era_char        ld      de, (CHARS)     ;de -> bitmap of blank char
E40A'  CD E2D8'                         call    display_char
E40D'  0C               nxtchar         inc     c               ;increment column position
E40E'  24                               inc     h               ;incremtnt column count
E40F'  DD 7E 02                         ld      a, (ix+width)
E412'  BC                               cp      h
E413'  20 C9                            jr      nz, inner2      ;jump if more columns to write
E415'  04                               inc     b               ;else increment row position
E416'  2C                               inc     l               ;increment row count
E417'  DD 7E 03                         ld      a, (ix+height)
E41A'  BD                               cp      l
E41B'  20 BC                            jr      nz, outer2      ;jump if more rows to write
E41D'  C1                               pop     bc              ;else done
E41E'  01 0000                          ld      bc, 0           ;return 00 in BC, nothing overwritten
E421'  FB               e_exit          ei
E422'  E1                               pop     hl
E423'  D1                               pop     de
E424'  F1                               pop     af
E425'  C9                               ret


                        ;******************************************************************
                        ;
                        ; MOVE_SPRITE
                        ;
                        ; Inputs: A = sprite-id
                        ;         D = relative vertical motion
                        ;         E = relative horizontal motion
                        ;
                        ; Outputs: BC = 0000 - OK, nothing overwritten
                        ;             = 0100 - OK, something overwritten
                        ;             = 0003 - illegal sprite-id
                        ;
                        ; Globals Read: screen_ht
                        ;               gflags
                        ;
                        ; Globals Written: sprite data structure
                        ;
                        ; Procedures Called: erase_sprite
                        ;                    put_sprite
                        ;
                        ; Procedures Called By: I_F_HANDLER
                        ;                       user program
                        ;
```

```
                        ; Description: this routine moves the specified sprite by the specified
                        ;              amount.  It is equivalent to Erase_Sprite followed by
                        ;              Put_Sprite.
                        ;
                        ;******************************************************************


E426'  E5               move_sprite     push    hl
E427'  F5                               push    af
E428'  CD E3B1'                         call    erase_sprite
E42B'  CB 41                            bit     0, c            ;if an error occurred, exit
E42D'  20 1E                            jr      nz, m_exit
E42F'  DD 7E 00                         ld      a, (ix+row)     ;update sprite position
E432'  82                               add     a, d
E433'  21 0FFB                          ld      hl, gflags
E436'  CB 4E                            bit     autowrap, (hl)
E438'  28 08                            jr      z, row_ok
E43A'  CB 7F                            bit     7, a            ;is row negative?
E43C'  28 04                            jr      z, row_ok       ;no, so jump
E43E'  21 0FF9                          ld      hl, screen_ht   ;yes, so add it to (screen_ht)
E441'  86                               add     a, (hl)
E442'  57               row_ok          ld      d, a
E443'  DD 7E 01                         ld      a, (ix+col)
E446'  83                               add     a, e
E447'  5F                               ld      e, a
E448'  F1                               pop     af
E449'  F5                               push    af
E44A'  CD E307'                         call    put_sprite
E44D'  F1               m_exit          pop     af
E44E'  E1                               pop     hl
E44F'  C9                               ret


                        ;******************************************************************
                        ;
                        ; CH_LOC
                        ;
                        ; Inputs: A = sprite-id
                        ;         D = new row
                        ;         E = new col
                        ;
                        ; Outputs: BC = 0000 - OK
                        ;             = 0003 - illegal sprite-id
                        ;
                        ; Globals Read: none.
                        ;
                        ; Globals Written: sprite data structure
                        ;
                        ; Procedures Called: check_id
                        ;                    spr_addr
                        ;
                        ; Procedures Called By: I_F_HANDLER
                        ;                       user program
                        ;
                        ; Description: this routine updates the row and column in the record for
                        ;              the sprite identified by sprite-id.
                        ;
                        ;*****************************************************************


E450'  CD E282'         ch_loc          call    check_id        ;validate sprite-id
E453'  38 04                            jr      c, ch_l_id_ok   ;if id is ok then jump
E455'  01 0003                          ld      bc, 0003        ;else return 03 in BC
E458'  C9                               ret
E459'  CD E25F'         ch_l_id_ok      call    spr_addr        ;ix -> loc of sprite record
E45C'  DD 72 00                         ld      (ix+row), d
E45F'  DD 73 01                         ld      (ix+col), e
E462'  01 0000                          ld      bc, 00          ;return 00 in BC
E465'  C9                               ret


                        ;*****************************************************************
                        ;
                        ; CH_ATTR
                        ;
                        ; Inputs: A = sprite-id
                        ;         D = new color
                        ;
                        ; Outputs: BC = 0000 - OK
                        ;             = 0003 - illegal sprite-id
                        ;             = 0005 - illegal color
                        ;
                        ; Globals Read: none.
                        ;
                        ; Globals Written: sprite data structure
                        ;
                        ; Procedures Called: check_id
                        ;                    spr_addr
                        ;
                        ; Procedures Called By: I_F_HANDLER
                        ;                       user program
                        ;
                        ; Description: this routine puts a new color into the record for the
                        ;              sprite identified by sprite-id.
                        ;
                        ;*****************************************************************


E466'  CD E282'         ch_attr         call    check_id        ;validate sprite-id
E469'  38 03                            jr      c, ch_a_id_ok   ;if id is ok then jump
E46B'  01 0003                          ld      bc, 0003        ;else return 03 in BC
E46E'  F5               ch_a_id_ok      push    af              ;validate color
E46F'  3E 07                            ld      a, 7
E471'  BA                               cp      d
```

```
E472'  30 05                            jr      nc, ch_a_color_ok       ;jump if color ok
E474'  F1                               pop     af
E475'  01 0005                          ld      bc, 0005        ;else return 05 in BC
E478'  C9                               ret
E479'  F1               ch_a_color_ok   pop     af
E47A'  CD E25F'                         call    spr_addr
E47D'  DD 72 04                         ld      (ix+color), d
E480'  01 0000                          ld      bc, 0           ;return 00 in BC
E483'  C9                               ret


                        ;*****************************************************************
                        ;
                        ; OVERLAP
                        ;
                        ; Inputs: D = sprite-id1
                        ;         E = sprite-id2
                        ;
                        ; Outputs: BC = 0000 - OK, no overlap
                        ;             = 0200 - OK, overlap
                        ;             = 0003 - illegal sprite-id
                        ;
                        ; Globals Read: sprite data structure
                        ;
                        ; Globals Written: none.
                        ;
                        ; Procedures Called: check_id
                        ;                    spr_addr
                        ;
                        ; Procedures Called By: upd_cols
                        ;                       upd_rows
                        ;                       I_F_HANDLER
                        ;                       user program
                        ;
                        ; Description: this routine checks if two sprites overlap on the screen.
                        ;              This is done by comparing the ranges covered by each sprite
                        ;              in the x- and y-directions.  If there is overlap in both
                        ;              directions, then the sprites must overlap.  The following
                        ;              diagram defines terms mentioned below:
                        ;
                        ;      (ulx1, uly1)
                        ;        +---------------------------+
                        ;        |                           |
                        ;        |     (ulx2, uly2)          |
                        ;        |       +-------------------------------+
                        ;        |       |                   |           |
                        ;        |       |                   |           |
                        ;        |       |                   |           |
                        ;        |       |                   |           |
                        ;        +-------|-------------------+           |
                        ;                |                (lrx1, lry1)   |
                        ;                |                               |
                    ;                 |                               |
                    ;                 |                               |
                    ;                 +-------------------------------+
                    ;                                           (lrx2, lry2)
                    ;
                    ;*****************************************************************


E484'  DD E5        overlap         push    ix
E486'  F5                           push    af
E487'  D5                           push    de
E488'  E5                           push    hl
E489'  7A                           ld      a, d            ;validate sprite-id1
E48A'  CD E282'                     call    check_id
E48D'  38 04                        jr      c, o_ok1
E48F'  01 0003      o_id_ng         ld      bc, 0003        ;illegal sprite-id, return 3 in BC
E492'  C9                           ret
E493'  42           o_ok1           ld      b, d            ;save sprite-ids in bc
E494'  4B                           ld      c, e
E495'  7B                           ld      a, e            ;validate sprite-id2
E496'  CD E282'                     call    check_id
E499'  30 F4                        jr      nc, o_id_ng
                                                            ;here if both sprite-ids ok
E49B'  78                           ld      a, b            ;check if there is any overlap in
                                                            ;  the x-direction
E49C'  CD E25F'                     call    spr_addr
E49F'  DD 56 01                     ld      d, (ix+col)
E4A2'  DD 5E 02                     ld      e, (ix+width)
E4A5'  79                           ld      a, c
E4A6'  CD E25F'                     call    spr_addr
E4A9'  DD 66 01                     ld      h, (ix+col)
E4AC'  DD 6E 02                     ld      l, (ix+width)
E4AF'  7A                           ld      a, d
E4B0'  83                           add     a, e
E4B1'  3D                           dec     a               ;a = lrx1
E4B2'  BC                           cp      h               ;h = ulx2
E4B3'  38 2B                        jr      c, no_coll      ;if ulx2 > lrx1, then no overlap
E4B5'  7C                           ld      a, h
E4B6'  85                           add     a, l
E4B7'  3D                           dec     a               ;a = lrx2
E4B8'  BA                           cp      d               ;d = ulx1
E4B9'  38 25                        jr      c, no_coll      ;if ulx1 > lrx2, then no overlap
E4BB'  78                           ld      a, b            ;check if there is any overlap in the
                                                            ;  y-direction
E4BC'  CD E25F'                     call    spr_addr
E4BF'  DD 56 00                     ld      d, (ix+row)
E4C2'  DD 5E 03                     ld      e, (ix+height)
E4C5'  79                           ld      a, c
E4C6'  CD E25F'                     call    spr_addr
E4C9'  DD 66 00                     ld      h, (ix+row)
E4CC'  DD 6E 03                     ld      l, (ix+height)
E4CF'  7A                           ld      a, d
```

```
E4D0'  83                           add     a, e
E4D1'  3D                           dec     a               ;a = lry1
E4D2'  BC                           cp      h               ;h = uly2
E4D3'  38 0B                        jr      c, no_coll      ;if lry1 < uly2, then no overlap
E4D5'  7C                           ld      a, h
E4D6'  85                           add     a, l
E4D7'  3D                           dec     a               ;a = lry2
E4D8'  BA                           cp      d               ;d = uly1
E4D9'  38 05                        jr      c, no_coll      ;if lry2 < uly1, then no overlap
E4DB'  01 0200      yes_coll        ld      bc, 0200H       ;return OK, overlap
E4DE'  18 03                        jr      o_exit
E4E0'  01 0000      no_coll         ld      bc, 0           ;return OK, no overlap
E4E3'  E1           o_exit          pop     hl
E4E4'  D1                           pop     de
E4E5'  F1                           pop     af
E4E6'  DD E1                        pop     ix
E4E8'  C9                           ret


                    ;*****************************************************************
                    ;
                    ; INITSCREEN
                    ;
                    ; Inputs: A = screen-height
                    ;         D = background-color
                    ;         E = border-color
                    ;
                    ; Outputs: BC = 0000 - OK
                    ;             = 0005 - illegal color
                    ;             = 0007 - illegal screen-height
                    ;
                    ; Globals Read: ATTR_P
                    ;               TVFLAG
                    ;               screen_ht
                    ;
                    ; Globals Written: screen_ht
                    ;                  ATTR_P
                    ;                  backgcolor
                    ;                  BORDCR
                    ;                  TVFLAG
                    ;
                    ; Procedures Called: CLS_B
                    ;
                    ; Procedures Called By: I_F_HANDLER
                    ;                       user program
                    ;
                    ; Description: this routine sets the screen_ht variable to the specified
                    ;              value.  If screen-height is not in the range 0 - 24, 07
                    ;              is returned in BC.  If background-color or border-color is
                    ;              not in the range 0 - 7, 05 is returned in BC.  The top
                    ;              screen-height lines of the screen are cleared and set to
                    ;              the specified permanent background color.  The remaining
```

```
                ;               lines of the screen are cleared and set to the specified
                ;               border color.
                ;
                ;**********************************************************************


E4E9'  FE 19     initscreen     cp      max_rows+1      ;validate screen-height
E4EB'  38 04                    jr      c, sh_ok        ;if screen-height ok, the jump
E4ED'  01 0007                  ld      bc, 0007        ;else return 07 in BC
E4F0'  C9                       ret
E4F1'  32 DFF9   sh_ok          ld      (screen_ht), a  ;store screen-height
E4F4'  F5                       push    af
E4F5'  3E 07                    ld      a, 7            ;validate background-color
E4F7'  BA                       cp      d
E4F8'  30 05                    jr      nc, bc_ok       ;if background-color ok, then jump
E4FA'  01 0005                  ld      bc, 0005        ;else return 05 in BC
E4FD'  F1                       pop     af
E4FE'  C9                       ret
E4FF'  BB        bc_ok          cp      e               ;validate border-color
E500'  30 05                    jr      nc, bdc_ok      ;if border-color ok, then jump
E502'  01 0005                  ld      bc, 0005        ;else return 05 in BC
E505'  F1                       pop     af
E506'  C9                       ret
E507'  3A 5C8D   bdc_ok         ld      a, (ATTR_P)
E50A'  E6 C7                    and     11000111B       ;clear current background color
E50C'  CB 22                    sla     d
E50E'  CB 22                    sla     d
E510'  CB 22                    sla     d
E512'  B2                       or      d               ;set new background color
E513'  32 5C8D                  ld      (ATTR_P), a
E516'  32 DFF8                  ld      (backgcolor), a
E519'  7B                       ld      a, e            ;set new border color
E51A'  D3 FE                    out     (BORDPT), a     ;change the border
E51C'  CB 27                    sla     a
E51E'  CB 27                    sla     a
E520'  CB 27                    sla     a
E522'  CB 6F                    bit     5, a            ;set the appropriate ink color
E524'  20 02                    jr      nz, black_ink   ;if light border, then black ink
E526'  EE 07                    xor     7               ;else white ink
E528'  32 5C48   black_ink      ld      (BORDCR), a
E52B'  D5                       push    de
E52C'  E5                       push    hl
E52D'  21 5C3C                  ld      hl, TVFLAG
E530'  7E                       ld      a, (hl)         ;save (TVFLAG)
E531'  F5                       push    af
E532'  CB 86                    res     0, (hl) ;clear top part of screen
E534'  06 18                    ld      b, max_rows
E536'  E5                       push    hl
E537'  CD 097F                  call    CLS_B
E53A'  E1                       pop     hl
E53B'  3A DFF9                  ld      a, (screen_ht)  ;clear bottom part of screen
E53E'  4F                       ld      c, a
```

```
E53F'  78                       ld      a, b
E540'  91                       sub     c
E541'  47                       ld      b, a            ;b <- max_rows - (screen_ht)
E542'  28 05                    jr      z, no_clear
E544'  CB C6                    set     0, (hl)
E546'  CD 097F                  call    CLS_B
E549'  F1        no_clear       pop     af
E54A'  32 5C3C                  ld      (TVFLAG), a     ;restore (TVFLAG)
E54D'  E1                       pop     hl
E54E'  D1                       pop     de
E54F'  F1                       pop     af
E550'  01 0000                  ld      bc, 0           ;return 0 in BC
E553'  C9                       ret


                ;**********************************************************************
                ;
                ; UPD_CCLS
                ;
                ; Inputs: A = column adjustment (1 for right scroll, -1 for left scroll)
                ;
                ; Outputs: none.
                ;
                ; Globals Read: max_sprites
                ;               screen_ht
                ;               gflags
                ;
                ; Globals Written: max_sprites
                ;                  sprite data structure
                ;                  scratchpad
                ;
                ; Procedures Called: spr_addr
                ;                    overlap
                ;                    put_sprite
                ;
                ; Procedures Called By: h_scroll
                ;
                ; Description: this routine updates the column position of all sprites.
                ;              It also checks if, as a result of the horizontal scroll,
                ;              each sprite should be written to the screen.  This is done
                ;              by creating two dummy sprites (sprite-id is max_sprites)
                ;              whose size and location correspond to the right and left
                ;              columns of the screen respectively.  If a given sprite
                ;              overlaps either of these dummy sprites, it is written
                ;              to the screen.
                ;
                ;**********************************************************************


E554'  DD E5     upd_cols       push    ix
E556'  C5                       push    bc
E557'  D5                       push    de
```

```
    E558'  E5                                  push    hl
    E559'  67                                  ld      h, a              ;save column adjustment in h
    E55A'  3A DFFA                             ld      a, (max_sprites)
    E55D'  3C                                  inc     a                 ;temporarily increment max_sprites
    E55E'  32 DFFA                             ld      (max_sprites), a;  to allow for the dummy sprite
    E561'  3D                                  dec     a
    E562'  5F                                  ld      e, a              ;e = sprite-id of the dummy sprite
    E563'  DD 21 DFE3                          ld      ix, scratchpad  ;initialize the dummy sprite
    E567'  DD 36 00 00                         ld      (ix+row), 0
    E56B'  DD 36 07 01                         ld      (ix+sflags), 1
    E56F'  DD 36 02 01                         ld      (ix+width), 1
    E573'  F5                                  push    af
    E574'  3A DFF9                             ld      a, (screen_ht)
    E577'  3D                                  dec     a
    E578'  DD 77 03                            ld      (ix+height), a
    E57B'  F1                                  pop     af
    E57C'  DD 36 01 1F                         ld      (ix+col), max_cols-1
    E580'  3D                   updc_loop      dec     a                 ;a = id of current sprite
    E581'  CD E?5F'                            call    spr_addr          ;update column position
    E584'  6F                                  ld      l, a
    E585'  DD 7E 01                            ld      a, (ix+col)
    E588'  84                                  add     a, h
    E589'  E5                                  push    hl
    E58A'  21 DFF8                             ld      hl, gflags
    E58D'  CB 4E                               bit     autowrap, (hl)
    E58F'  E1                                  pop     hl
    E590'  28 0D                               jr      z, uc_cont        ;if not autowrap mode, then jump
    E592'  FE 20                               cp      max_cols
    E594'  20 03                               jr      nz, uc1           ;if column <> max_cols then jump
    E596'  AF                                  xor     a                 ;else column <- 0
    E597'  18 06                               jr      uc_cont           ;continue
    E599'  FE FF                uc1            cp      -1
    E59B'  20 02                               jr      nz, uc_cont       ;if column <> -1, then jump
    E59D'  3E 1F                               ld      a, max_cols-1     ;else column <- max_cols-1
    E59F'  DD 77 01             uc_cont        ld      (ix+col), a       ;don't need to wrap position as this
    E5A2'  55                                  ld      d, l              ;  is done by put_sprite
    E5A3'  CD E484'                            call    overlap
    E5A6'  CB 48                               bit     1, b
    E5A8'  7D                                  ld      a, l
    E5A9'  20 13                               jr      nz, wrt_spr
    E5AB'  DD E5                               push    ix
    E5AD'  DD 21 DFE3                          ld      ix, scratchpad
    E5B1'  DD 36 01 00                         ld      (ix+col), 0
    E5B5'  DD E1                               pop     ix
    E5B7'  CD E484'                            call    overlap
    E5BA'  CB 48                               bit     1, b
    E5BC'  28 08                               jr      z, next_spr       ;if no overlap, go on to the next one
    E5BE'  6B                   wrt_spr        ld      l, e
    E5BF'  DD 56 00                            ld      d, (ix+row)
    E5C2'  DD 5E 01                            ld      e, (ix+col)
    E5C5'  CD E307'                            call    put_sprite        ;overlaps, so write sprite to screen
    E5C8'  5D                                  ld      e, l
```

```
    E5C9'  A7                   next_spr          and     a
    E5CA'  20 B4                                  jr      nz, updc_loop
    E5CC'  21 DFFA                                ld      hl, max_sprites
    E5CF'  35                                     dec     (hl)              ;restore max_sprites to its original
                                                                            ;  value
    E5D0'  E1                                     pop     hl
    E5D1'  D1                                     pop     de
    E5D2'  C1                                     pop     bc
    E5D3'  DD E1                                  pop     ix
    E5D5'  C9                                     ret


                                ;****************************************************************************
                                ;
                                ; H_SCROLL
                                ;
                                ; Inputs: A < 0 - left scroll
                                ;         A >= 0 - right scroll
                                ;
                                ; Outputs: BC = 0000 - OK
                                ;
                                ; Globals Read: screen_ht
                                ;               backgcolor
                                ;
                                ; Globals Written: none.
                                ;
                                ; Procedures Called: upd_cols
                                ;
                                ; Procedures Called By: I_P_HANDLER
                                ;                       user program
                                ;
                                ; Description: this routine causes the contents of the top (screen_ht)
                                ;              lines of the screen to be scrolled left or right one
                                ;              column, depending on the value of A.  All sprites have
                                ;              their column position updated by 1 or -1, depending on
                                ;              the direction of scroll.
                                ;
                                ;****************************************************************************


    E5D6'  F5                   h_scroll          push    af
    E5D7'  D5                                     push    de
    E5D8'  E5                                     push    hl
    E5D9'  D9                                     exx
    E5DA'  C5                                     push    bc
    E5DB'  D5                                     push    de
    E5DC'  E5                                     push    hl
    E5DD'  D9                                     exx
    E5DE'  F3                                     di
    E5DF'  47                                     ld      b, a              ;save direction
    E5E0'  3A DFF9                                ld      a, (screen_ht)  ;calc. the number of scan lines
    E5E3'  CB 27                                  sla     a                 ;  to be updated
```

```
     E5E5'   CB 27              1197                      sla     a
     E5E7'   CB 27              1198                      sla     a
     E5E9'   CB 78              1199                      bit     7, b
     E5EB'   28 43              1200                      jr      z, right_scroll ;if A >=0, then jump
     E5ED'   D9                 1201   left_scroll        exx                     ;use alt. regs. for attr pointers
     E5EE'   21 5801            1202                      ld      hl, 5801H
     E5F1'   11 5800            1203                      ld      de, 5800H
     E5F4'   D9                 1204                      exx
     E5F5'   3A 0FF9            1205                      ld      a, (screen_ht)
     E5F8'   47                 1206                      ld      b, a            ;b = line counter
     E5F9'   21 E686'           1207                      ld      hl, left_table
     E5FC'   E5                 1208                      push    hl
     E5FD'   E1                 1209   left_outer         pop     hl
     E5FE'   5E                 1210                      ld      e, (hl)
     E5FF'   23                 1211                      inc     hl
     E600'   56                 1212                      ld      d, (hl)         ;de -> dest for next line
     E601'   23                 1213                      inc     hl
     E602'   E5                 1214                      push    hl
     E603'   62                 1215                      ld      h, d
     E604'   6B                 1216                      ld      l, e
     E605'   23                 1217                      inc     hl              ;hl -> source for next line
     E606'   3E 08              1218                      ld      a, 8            ;a = scan counter
     E608'   C5                 1219                      push    bc
     E609'   01 001F            1220   left_inner         ld      bc, max_cols-1
     E60C'   ED B0              1221                      ldir                    ;move scan left
     E60E'   EB                 1222                      ex      de, hl
     E60F'   36 00              1223                      ld      (hl), 0         ;clear last column
     E611'   01 00E2            1224                      ld      bc, 256-(max_cols-2)
     E614'   09                 1225                      add     hl, bc          ;hl -> start of next scan + one byte
     E615'   54                 1226                      ld      d, h
     E616'   5D                 1227                      ld      e, l
     E617'   1B                 1228                      dec     de              ;de -> start of next scan
     E618'   3D                 1229                      dec     a
     E619'   20 EE              1230                      jr      nz, left_inner  ;more scans to do, so jump
     E61B'   D9                 1231                      exx
     E61C'   01 001F            1232                      ld      bc, max_cols-1
     E61F'   ED B0              1233                      ldir                    ;move attributes
     E621'   3A 0FF8            1234                      ld      a, (backgcolor) ;clear rightmost column to permanent
     E624'   12                 1235                      ld      (de), a         ;  attribute
     E625'   23                 1236                      inc     hl              ;hl -> second byte of next line
     E626'   13                 1237                      inc     de              ;de -> first byte of next line
     E627'   D9                 1238                      exx
     E628'   C1                 1239                      pop     bc
     E629'   10 D2              1240                      djnz    left_outer      ;if more lines to do, then jump
     E62B'   E1                 1241                      pop     hl
     E62C'   3E FF              1242                      ld      a, -1           ;set parameter for upd_cols
     E62E'   18 46              1243                      jr      hs_cont
     E630'   D9                 1244   right_scroll       exx                     ;use alt. regs. for attr pointers
     E631'   21 581E            1245                      ld      hl, 581EH
     E634'   11 581F            1246                      ld      de, 581FH
     E637'   D9                 1247                      exx
     E638'   3A 0FF9            1248                      ld      a, (screen_ht)
```

```
     E63B'   47                 1249                      ld      b, a            ;b = line counter
     E63C'   21 E6B6'           1250                      ld      hl, rt_table
     E63F'   E5                 1251                      push    hl
     E640'   E1                 1252   rt_outer           pop     hl
     E641'   5E                 1253                      ld      e, (hl)
     E642'   23                 1254                      inc     hl
     E643'   56                 1255                      ld      d, (hl)         ;de -> dest for next line
     E644'   23                 1256                      inc     hl
     E645'   E5                 1257                      push    hl
     E646'   62                 1258                      ld      h, d
     E647'   6B                 1259                      ld      l, e
     E648'   2B                 1260                      dec     hl              ;hl -> source for next line
     E649'   3E 08              1261                      ld      a, 8            ;a = scan counter
     E64B'   C5                 1262                      push    bc
     E64C'   01 001F            1263   rt_inner           ld      bc, max_cols-1
     E64F'   ED B8              1264                      lddr                    ;move scan right
     E651'   EB                 1265                      ex      de, hl
     E652'   36 00              1266                      ld      (hl), 0         ;clear first column
     E654'   01 011E            1267                      ld      bc, 256+(max_cols-2)
     E657'   09                 1268                      add     hl, bc          ;hl -> end of next scan - 1 byte
     E658'   54                 1269                      ld      d, h
     E659'   5D                 1270                      ld      e, l
     E65A'   13                 1271                      inc     de              ;de -> end of next scan
     E65B'   3D                 1272                      dec     a
     E65C'   20 EE              1273                      jr      nz, rt_inner    ;more scans to do, so jump
     E65E'   D9                 1274                      exx
     E65F'   01 001F            1275                      ld      bc, 31
     E662'   ED B8              1276                      lddr                    ;move attributes
     E664'   3A 0FF8            1277                      ld      a, (backgcolor) ;clear leftmost column to permanent
     E667'   12                 1278                      ld      (de), a         ;  attribute
     E668'   01 003F            1279                      ld      bc, 2*max_cols-1
     E66B'   09                 1280                      add     hl, bc          ;hl -> second to last byte of next line
     E66C'   54                 1281                      ld      d, h
     E66D'   5D                 1282                      ld      e, l
     E66E'   13                 1283                      inc     de              ;de -> last byte of next line
     E66F'   D9                 1284                      exx
     E670'   C1                 1285                      pop     bc
     E671'   10 CD              1286                      djnz    rt_outer        ;more lines to do, so jump
     E673'   E1                 1287                      pop     hl
     E674'   3E 01              1288                      ld      a, 1            ;set parameter for upd_cols
     E676'   CD E554'           1289   hs_cont            call    upd_cols
     E679'   FB                 1290                      ei
     E67A'   D9                 1291                      exx
     E67B'   E1                 1292                      pop     hl
     E67C'   D1                 1293                      pop     de
     E67D'   C1                 1294                      pop     bc
     E67E'   D9                 1295                      exx
     E67F'   E1                 1296                      pop     hl
     E680'   D1                 1297                      pop     de
     E681'   F1                 1298                      pop     af
     E682'   01 0000            1299                      ld      bc, 0
     E685'   C9                 1300                      ret
```

```
                         ;This table contains the destination address for each row for scrolling left

E686'   4000             left_table      defw    4000H
E688'   4020                             defw    4020H
E68A'   4040                             defw    4040H
E68C'   4060                             defw    4060H
E68E'   4080                             defw    4080H
E690'   40A0                             defw    40A0H
E692'   40C0                             defw    40C0H
E694'   40E0                             defw    40E0H
E696'   4800                             defw    4800H
E698'   4820                             defw    4820H
E69A'   4840                             defw    4840H
E69C'   4860                             defw    4860H
E69E'   4880                             defw    4880H
E6A0'   48A0                             defw    48A0H
E6A2'   48C0                             defw    48C0H
E6A4'   48E0                             defw    48E0H
E6A6'   5000                             defw    5000H
E6A8'   5020                             defw    5020H
E6AA'   5040                             defw    5040H
E6AC'   5060                             defw    5060H
E6AE'   5080                             defw    5080H
E6B0'   50A0                             defw    50A0H
E6B2'   50C0                             defw    50C0H
E6B4'   50E0                             defw    50E0H


                         ;This table contains the destination address for each row for scrolling right

E6B6'   401F             rt_table        defw    401FH
E6B8'   403F                             defw    403FH
E6BA'   405F                             defw    405FH
E6BC'   407F                             defw    407FH
E6BE'   409F                             defw    409FH
E6C0'   40BF                             defw    40BFH
E6C2'   40DF                             defw    40DFH
E6C4'   40FF                             defw    40FFH
E6C6'   481F                             defw    481FH
E6C8'   483F                             defw    483FH
E6CA'   485F                             defw    485FH
E6CC'   487F                             defw    487FH
E6CE'   489F                             defw    489FH
E6D0'   48BF                             defw    48BFH
E6D2'   48DF                             defw    48DFH
E6D4'   48FF                             defw    48FFH
E6D6'   501F                             defw    501FH
E6D8'   503F                             defw    503FH
E6DA'   505F                             defw    505FH
E6DC'   507F                             defw    507FH
```

```
E6DE'   509F                             defw    509FH
E6E0'   50BF                             defw    50BFH
E6E2'   50DF                             defw    50DFH
E6E4'   50FF                             defw    50FFH


                         ;****************************************************************
                         ;
                         ; UPD_ROWS
                         ;
                         ; Inputs: A = row adjustment (1 for scroll down, -1 for scroll up)
                         ;
                         ; Outputs: none.
                         ;
                         ; Globals Read: max_sprites
                         ;               screen_ht
                         ;               gflags
                         ;
                         ; Globals Written: max_sprites
                         ;                  sprite data structure
                         ;                  scratchpad
                         ;
                         ; Procedures Called: spr_addr
                         ;                    overlap
                         ;                    put_sprite
                         ;
                         ; Procedures Called By: v_scroll
                         ;
                         ; Description: this routine updates the row position of all sprites.
                         ;              It also checks if, as a result of the vertical scroll,
                         ;              each sprite should be written to the screen.  This is done
                         ;              by creating two dummy sprites (sprite-id is max_sprites)
                         ;              whose size and location correspond to the top and bottom
                         ;              rows of the screen respectively.  If a given sprite
                         ;              overlaps either of these dummy sprites, it is written
                         ;              to the screen.
                         ;
                         ;****************************************************************


E6E6'   DD E5            upd_rows        push    ix
E6E8'   C5                               push    bc
E6E9'   D5                               push    de
E6EA'   E5                               push    hl
E6EB'   67                               ld      h, a            ;save row adjustment in h
E6EC'   3A DFFA                          ld      a, (max_sprites)
E6EF'   3C                               inc     a               ;temporarily increment max_sprites
E6F0'   32 DFFA                          ld      (max_sprites), a;  to allow for the dummy sprite
E6F3'   3D                               dec     a
E6F4'   5F                               ld      e, a            ;e = sprite-id of the dummy sprite
E6F5'   DD 21 DFE3                       ld      ix, scratchpad  ;initialize the dummy sprite
E6F9'   DD 36 01 00                      ld      (ix+col), 0
```

```
E6FD'  DD 36 07 01                         ld      (ix+eflags), 1
E701'  DD 36 02 20                         ld      (ix+width), max_cols
E705'  DD 36 03 01                         ld      (ix+height), 1
E709'  F5                                  push    af
E70A'  3A DFF9                             ld      a, (screen_ht)
E70D'  3D                                  dec     a
E70E'  DD 77 00                            ld      (ix+row), a
E711'  F1                                  pop     af
E712'  3D                 updr_loop        dec     a               ;a = id of current sprite
E713'  CD E25F'                            call    spr_addr        ;update column position
E716'  6F                                  ld      l, a
E717'  DD 7E 00                            ld      a, (ix+row)
E71A'  84                                  add     a, h
E71B'  E5                                  push    hl
E71C'  21 DFFB                             ld      hl, gflags
E71F'  CB 4E                               bit     autowrap, (hl)
E721'  E1                                  pop     hl
E722'  28 16                               jr      z, ur_cont      ;if not autowrap mode, then jump
E724'  E5                                  push    hl
E725'  21 DFF9                             ld      hl, screen_ht
E728'  BE                                  cp      (hl)
E729'  E1                                  pop     hl
E72A'  20 03                               jr      nz, ur1         ;if row <> screen_ht then jump
E72C'  AF                                  xor     a               ;else row <- 0
E72D'  18 0B                               jr      ur_cont         ;continue
E72F'  FE FF              ur1              cp      -1
E731'  20 07                               jr      nz, ur_cont     ;if row <> -1, then jump
E733'  E5                                  push    hl
E734'  21 DFF9                             ld      hl, screen_ht
E737'  7E                                  ld      a, (hl)         ;else row <- screen_ht-1
E738'  3D                                  dec     a
E739'  E1                                  pop     hl
E73A'  DD 77 00           ur_cont          ld      (ix+row), a
E73D'  55                                  ld      d, l
E73E'  CD E486'                            call    overlap
E741'  CB 48                               bit     1, b
E743'  7D                                  ld      a, l
E744'  20 13                               jr      nz, wt_spr
E746'  DD E5                               push    ix
E748'  DD 21 DFE3                          ld      ix, scratchpad
E74C'  DD 36 00 00                         ld      (ix+row), 0
E750'  DD E1                               pop     ix
E752'  CD E484'                            call    overlap
E755'  CB 48                               bit     1, b
E757'  28 0B                               jr      z, nx_spr       ;if no overlap, go on to the next one
E759'  6B                 wt_spr           ld      l, e
E75A'  DD 56 00                            ld      d, (ix+row)
E75D'  DD 5E 01                            ld      e, (ix+col)
E760'  CD E307'                            call    put_sprite      ;overlaps, so write sprite to screen
E763'  5D                                  ld      e, l
E764'  A7                 nx_spr           and     a
E765'  20 AB                               jr      nz, updr_loop
```

```
E767'  21 DFFA                             ld      hl, max_sprites
E76A'  35                                  dec     (hl)            ;restore max_sprites to its original
                                                                   ;  value
E76B'  E1                                  pop     hl
E76C'  D1                                  pop     de
E76D'  C1                                  pop     bc
E76E'  DD E1                               pop     ix
E770'  C9                                  ret


                          ;*****************************************************************
                          ;
                          ; V_SCROLL
                          ;
                          ; Inputs: A < 0 - left scroll
                          ;         A >= 0 - right scroll
                          ;
                          ; Outputs: BC = 0000 - OK
                          ;
                          ; Globals Read: screen_ht
                          ;               backgcolor
                          ;
                          ; Globals Written: ATTR_T
                          ;
                          ; Procedures Called: SET_PRINT_POS
                          ;                    WRITE_CHAR
                          ;
                          ; Procedures Called By: I_F_HANDLER
                          ;                       user program
                          ;
                          ; Description: this routine causes the contents of the top (screen_ht)
                          ;              lines of the screen to be scrolled left or right one
                          ;              column, depending on the value of A.  All sprites have
                          ;              their column position updated by 1 or -1, depending on
                          ;              the direction of scroll.
                          ;
                          ;*****************************************************************


E771'  F5                 v_scroll         push    af
E772'  D5                                  push    de
E773'  E5                                  push    hl
E774'  D9                                  exx
E775'  C5                                  push    bc
E776'  D5                                  push    de
E777'  E5                                  push    hl
E778'  D9                                  exx
E779'  F3                                  di
E77A'  CB 7F                               bit     7, a
E77C'  28 59                               jr      z, down_scroll  ;if A >=0, then jump
E77E'  D9                 up_scroll        exx                     ;use alt. regs. for attr pointers
E77F'  21 5820                             ld      hl, 5820H
```

```
E782'  11 5800                         ld      de, 5800H
E785'  D9                              exx
E786'  3A DFF9                         ld      a, (screen_ht)
E789'  3D                              dec     a
E78A'  47                              ld      b, a            ;b = line counter
E78B'  21 E860'                        ld      hl, vs_table
E78E'  E5                              push    hl
E78F'  E1               up_outer       pop     hl
E790'  5E                              ld      e, (hl)
E791'  23                              inc     hl
E792'  56                              ld      d, (hl)         ;de -> dest for next line
E793'  23                              inc     hl
E794'  D5                              push    de              ;put dest pointer on stack
E795'  5E                              ld      e, (hl)
E796'  23                              inc     hl
E797'  56                              ld      d, (hl)         ;de -> source for next line
E798'  2B                              dec     hl
E799'  E3                              ex      (sp), hl        ;exchange dest pointer and table
                                                               ;  pointer
E79A'  EB                              ex      de, hl          ;put pointers in proper regs
E79B'  3E 08                           ld      a, 8            ;a = scan counter
E79D'  C5                              push    bc
E79E'  01 0020          up_inner       ld      bc, max_cols
E7A1'  ED B0                           ldir                    ;move scan up
E7A3'  01 00E0                         ld      bc, 256-max_cols
E7A6'  09                              add     hl, bc          ;hl -> start of next scan
E7A7'  EB                              ex      de, hl
E7A8'  09                              add     hl, bc
E7A9'  EB                              ex      de, hl          ;de -> start of next scan dest
E7AA'  3D                              dec     a
E7AB'  20 F1                           jr      nz, up_inner    ;more scans to do, so jump
E7AD'  D9                              exx
E7AE'  01 0020                         ld      bc, max_cols
E7B1'  ED B0                           ldir                    ;move attributes
E7B3'  D9                              exx
E7B4'  C1                              pop     bc
E7B5'  10 D8                           djnz    up_outer        ;if more lines to do, then jump
E7B7'  E1                              pop     hl
E7B8'  3A DFF9                         ld      a, (screen_ht)  ;clear the bottom line
E7BB'  3D                              dec     a
E7BC'  47                              ld      b, a
E7BD'  0E 00                           ld      c, 0
E7BF'  CD E90E                         call    SET_PRINT_POS
E7C2'  06 20                           ld      b, max_cols
E7C4'  3A DFF8                         ld      a, (backgcolor) ;set background color to permanent
                                                               ;  value
E7C7'  32 5C8F                         ld      (ATTR_T), a
E7CA'  C5               cl_bot_line    push    bc
E7CB'  3E 20                           ld      a, ' '
E7CD'  CD E39D                         call    WRITE_CHAR
E7D0'  C1                              pop     bc
E7D1'  10 F7                           djnz    cl_bot_line
```

```
E7D3'  3E FF                           ld      a, -1           ;set parameter for upd_cols
E7D5'  18 79                           jr      vs_cont
E7D7'  3A DFF9          down_scroll    ld      a, (screen_ht)  ;set up table pointer
E7DA'  3D                              dec     a
E7DB'  F5                              push    af
E7DC'  CB 27                           sla     a
E7DE'  4F                              ld      c, a
E7DF'  06 00                           ld      b, 0
E7E1'  21 E860'                        ld      hl, vs_table
E7E4'  09                              add     hl, bc          ;hl -> entry for last line
E7E5'  E5                              push    hl
E7E6'  E5                              push    hl
E7E7'  D9                              exx                     ;use alt. regs. for attr pointers
E7E8'  E1                              pop     hl
E7E9'  5E                              ld      e, (hl)
E7EA'  23                              inc     hl
E7EB'  56                              ld      d, (hl)
E7EC'  EB                              ex      de, hl          ;hl -> 1st scan of last line
E7ED'  7C                              ld      a, h            ;calc. address of attr for last line
E7EE'  0F                              rrca                    ;  as done in ATTBYT in Home ROM
E7EF'  0F                              rrca
E7F0'  0F                              rrca
E7F1'  E6 03                           and     00000011B
E7F3'  F6 58                           or      01011000B
E7F5'  67                              ld      h, a
E7F6'  54                              ld      d, h            ;de -> 1st attr byte of last line
E7F7'  5D                              ld      e, l
E7F8'  01 0020                         ld      bc, max_cols
E7FB'  A7                              and     a
E7FC'  ED 42                           sbc     hl, bc          ;hl -> 1st attr byte of next to last
E7FE'  D9                              exx                     ;  line
E7FF'  E1                              pop     hl
E800'  F1                              pop     af
E801'  23                              inc     hl
E802'  E5                              push    hl
E803'  47                              ld      b, a            ;b = line counter
E804'  E1               down_outer     pop     hl
E805'  56                              ld      d, (hl)
E806'  2B                              dec     hl
E807'  5E                              ld      e, (hl)         ;de -> dest for next line
E808'  2B                              dec     hl
E809'  D5                              push    de              ;put dest pointer on stack
E80A'  56                              ld      d, (hl)
E80B'  2B                              dec     hl
E80C'  5E                              ld      e, (hl)         ;de -> source for next line
E80D'  23                              inc     hl
E80E'  E3                              ex      (sp), hl        ;exchange dest pointer and table
                                                               ;  pointer
E80F'  EB                              ex      de, hl          ;put pointers in proper regs
E810'  3E 08                           ld      a, 8            ;a = scan counter
E812'  C5                              push    bc
E813'  01 0020          down_inner     ld      bc, max_cols
```

```
E816'  ED B0                          ldir                    ;move scan down
E818'  01 00E0                        ld      bc, 256-max_cols
E81B'  09                             add     hl, bc          ;hl -> start of next scan
E81C'  EB                             ex      de, hl
E81D'  09                             add     hl, bc
E81E'  EB                             ex      de, hl          ;de -> start of next scan dest
E81F'  3D                             dec     a
E820'  20 F1                          jr      nz, down_inner  ;more scans to do, so jump
E822'  D9                             exx
E823'  01 0020                        ld      bc, max_cols
E826'  ED B0                          ldir                    ;move attributes
E828'  01 0040                        ld      bc, 2*max_cols
E82B'  A7                             and     a
E82C'  ED 42                          sbc     hl, bc
E82E'  EB                             ex      de, hl
E82F'  ED 42                          sbc     hl, bc
E831'  EB                             ex      de, hl
E832'  D9                             exx
E833'  C1                             pop     bc
E834'  10 CE                          djnz    down_outer      ;if more lines to do, then jump
E836'  E1                             pop     hl
E837'  01 0000                        ld      bc, 0           ;clear top line
E83A'  CD E90E                        call    SET_PRINT_POS
E83D'  06 20                          ld      b, max_cols
E83F'  3A DFF8                        ld      a, (backgcolor) ;set background color to permanent
                                                              ;  value
E842'  32 5C8F                        ld      (ATTR_T), a
E845'  C5                cl_top_line  push    bc
E846'  3E 20                          ld      a, ' '
E848'  CD E89D                        call    WRITE_CHAR
E84B'  C1                             pop     bc
E84C'  10 F7                          djnz    cl_top_line
E84E'  3E 01                          ld      a, 1            ;set parameter for upd_cols
E850'  CD E6E6'          vs_cont      call    upd_rows
E853'  FB                             ei
E854'  D9                             exx
E855'  E1                             pop     hl
E856'  D1                             pop     de
E857'  C1                             pop     bc
E858'  D9                             exx
E859'  E1                             pop     hl
E85A'  D1                             pop     de
E85B'  F1                             pop     af
E85C'  01 0000                        ld      bc, 0
E85F'  C9                             ret


                         ;This table contains the starting address of each row for use in vertical
                         ;  scrolling

E860'  4000              vs_table     defw    4000H
E862'  4020                           defw    4020H
```

```
E864'  4040                           defw    4040H
E866'  4060                           defw    4060H
E868'  4080                           defw    4080H
E86A'  40A0                           defw    40A0H
E86C'  40C0                           defw    40C0H
E86E'  40E0                           defw    40E0H
E870'  4800                           defw    4800H
E872'  4820                           defw    4820H
E874'  4840                           defw    4840H
E876'  4860                           defw    4860H
E878'  4880                           defw    4880H
E87A'  48A0                           defw    48A0H
E87C'  48C0                           defw    48C0H
E87E'  48E0                           defw    48E0H
E880'  5000                           defw    5000H
E882'  5020                           defw    5020H
E884'  5040                           defw    5040H
E886'  5060                           defw    5060H
E888'  5080                           defw    5080H
E88A'  50A0                           defw    50A0H
E88C'  50C0                           defw    50C0H
E88E'  50E0                           defw    50E0H


                                      end
```

```
SPRSVC  CRZ80/11 version 10.36.14        15-May-84  9:51:11        Page S-1
Sprite services module   SPRSVC.SRC

A        Reserved         ALLOC    0000             ATTR$P   5C8D             ATTR$T   5C8F             AUTOWR   0001
B        Reserved         BACKGC   DFF8             BC$OK    E4FF             BDC$OK   E507             BLACK$   E528
BORDCR   5C48             BORDPT   00FE             C        Reserved         CHARS    5C36             CHECK$   E282
CHTBL    E890             CH$ATT   E466             CH$ASC   E479             CH$ASI   E46E             CH$LOC   E450
CH$L$I   E459             CKROW1   E35F             CKROW2   E3F5             CLEAR$   E256             CLS$8    097F
CL$BOT   E7CA             CL$TOP   E845             COL      0001             COLOR    0004             COLOR$   E28F
COL$LO   E354             COMMAN   DFF7             CONT1    E36F             CONT2    E405             CREATE   E278
C$LOOP   E3EA             D        Reserved         DC$EXI   E2F8             DISPLA   E208             DOWN$I   E813
DOWN$O   E804             DOWN$S   E707             E        Reserved         ENOUGH   E253             ERASE$   E381
ERA$CH   E406             E$EXIT   E421             E$IDSO   E3C0             GET$CH   E91F             GFLAGS   DFF8
GLOBAL   001D             H        Reserved         HEIGHT   0003             HS$CON   E676             H$SCRO   E5D6
ID$OK    E284             INITSC   E4E9             INITS$   E219             INNER1   E348             INNER2   E3DE
L        Reserved         LEFT$I   E609             LEFT$O   E5FD             LEFT$S   E5ED             LEFT$T   E686
LHS      0002             M        Reserved         MAX$CO   0020             MAX$RO   0018             MAX$SP   DFFA
MOVE$S   E426             M$EXIT   E440             NAME     DFFC             NEG      0000             NEXTCH   E38A
NEXT$S   E5C9             NO$CLE   E549             NO$COL   E4E0             NO$OVE   E387             NO$STO   E37A
NUM$PA   DFEC             NXTCHA   E40C             NX$SPR   E764             OFF      E2D4             OUTER1   E343
OUTER2   E309             OVERLA   E484             OVERWR   0001             OVRWRO   E3AD             O$EXIT   E4E3
O$IDSN   E48F             O$OK1    E493             PARMS    DFEB             PARM1    DFED             PARM2    DFEF
PARM3    DFF1             PARM4    DFF3             PARM5    DFF5             PBITMA   0005             PSW     Reserved
PUT$SP   E307             P$EXIT   E398             P$IDSO   E316             RAMTOP   5CB2             RIGHT$   E630
ROW      0000             ROW$LO   E365             ROW$OK   E442             RT$INN   E64C             RT$OUT   E640
RT$TAB   E686             R$LOOP   E3FB             SA$EXI   E206             SCRATC   DFE3             SCREEN   DFF9
SELECT   1230             SENDTV   0500             SET$AT   0582             SET$AU   E2C9             SET$PR   E90E
SFLAGS   0007             SH$OK    E4F1             SP       Reserved         SPRCOD   E000             SPRITE   DFFE
SPR$AD   E25F             SVC$CO   DFE8             TVFLAG   5C3C             UC$CON   E59F             UC1      E599
UPDC$L   E580             UPDR$L   E712             UPD$CO   E554             UPD$RO   E6E6             UP$INN   E79E
UP$OUT   E78F             UP$SCR   E77E             UR$CON   E73A             UR1      E72F             VISIBL   E2F8
VS$CON   E850             VS$TAB   E860             VS$CRO   E771             WIDTH    0002             WRITE$   E890
WRTCHA   E37A             WRT$SP   E58E             WT$SPR   E759             Y        5C3A             YES$CO   E408

      No errors detected
```

```
IOLOW   CRZ80/11 version 10.36.14        7-May-84  15:9:0        Page 1
Low level I/O module   IOLOW.SRC

                                        NAME  IOLOW
                                        SUBTTL Low level I/O module


                        ;*****************************************************************
                        ;
                        ; Low Level I/O Module
                        ;
                        ; Inputs: parameters to desired service in appropriate registers.
                        ;
                        ; Outputs: none.
                        ;
                        ; Description: this module provides the following low level i/o services:
                        ;
                        ;       Set_Print_Pos - sets the print position
                        ;       Write_Char - writes a character to the current print position
                        ;       Get_Char - returns the character code of the character at the
                        ;                  desired position
                        ;
                        ;               These services are based on the routines SETCUR, WRCHAR,
                        ;               and GTCHAR of the dual-column support component of the
                        ;               Applications Development Library.
                        ;
                        ;*****************************************************************


                        ; Imports (Note: all symbols in upper case are imported)

                        ;From the Home ROM

                        ;Variables

        =5C7B           UDG             EQU     5C7BH
        =5C8D           ATTR_P          EQU     5C8DH
        =5C8E           MASK_P          EQU     5C8EH
        =5C91           P_FLAG          EQU     5C91H
        =5CC2           VIDMOD          EQU     5CC2H


                        ; Exports

                        ;Variables

                        ;               cmtbl

                        ;Services

                        ;               Write_Char, Set_Print_Pos, Get_Char


                        ; Locals

```

```
                            ;Constants

          =0018             scrsz           equ     24       ; 24 lines
          =3C00             chrset          equ     3c00h    ; rom char.table-100h
          =E93A             grphst          equ     ((grpst)-100h) ;std.graphics chars.


                            ;Variables
          =E890                     ORG     0E890H

    E890  3C00              chtbl           defw    chrset   ; address of character table  57391
                                                             ; (defaults to ts2068 system
                                                             ;  rom)
    E892  E93A              grtbl           defw    grphst   ; address of std.graphics tbl.57393
    E894  20                linlen          defb    20h      ; line length (32)            57395
    E895  1821              curpos          defw    1821h    ; current position (internal  57396
                                                             ;  format)
    E897  4000              dfadrs          defw    4000h    ; current display file addrs. 57398
    E899  00                maskb           defb    0        ; mask to be applied to       57400
                                                             ; display characters
    E89A  00                attbyt          defb    0h       ; current attributes          57401
    E89B  80                gtindx          defb    80h      ; index for adjusting         57402
                                                             ; ch.code in gtchar
    E89C  00                attmsk          defb    0        ; attribute mask              57407


                            ;****************************************************************
                            ;
                            ; WRITE_CHAR
                            ;
                            ; Inputs: A = character code.
                            ;
                            ; Outputs: BC = 0000 - OK
                            ;             = 0CXX - error, XX <> 00
                            ;
                            ; Globals Read: UDG
                            ;               grtbl
                            ;               chtbl
                            ;               linlen
                            ;               maskb
                            ;
                            ; Globals Written: none.
                            ;
                            ; Procedures Called: ldattr
                            ;                    ldposn
                            ;                    updatt
                            ;                    stposn
                            ;
                            ; Procedures Called By: DISPLAY_CHAR
                            ;                       V_SCROLL
                            ;
                            ; Description: this service writes the specified character to the current
```

```
                            ;               print position.
                            ;
                            ;****************************************************************



    E89D  F5                write_char      push    af
    E89E  D5                                push    de
    E89F  E5                                push    hl
    E8A0  CD EA24                           call  ldattr          ; entry with code in a
                                                                  ; get attribute and mask controls

                                                                  ; entry to use attribute values in
                                                                  ; internal variables without reloading
    E8A3  CD E90F           wrch01          call    ldposn        ; load registers for current position
                                                                  ; bc=cursor position from 'curpos'
                                                                  ; hl=display file address from 'dfadrs'
                                                                  ; a=code for char. to be displayed

    E8A6  C5                                push    bc            ; save cursor position
    E8A7  FE 80                             cp      80h           ; test if ascii printable (20h-7fh)
    E8A9  38 15                             jr      c, wrch12     ; yes
    E8AB  FE 90                             cp      90h           ; test if std. graphics (80h-8fh)
    E8AD  38 09                             jr      c, wrch11
    E8AF  ED 4B 5C7B                        ld      bc, (UDG)     ; user-defined graphics(90h-a4h)
    E8B3  05                                dec     b             ; adjust address-100h
    E8B4  D6 70                             sub     70h           ; adjust for index into table
    E8B6  18 0C                             jr      wrch13
    E8B8  ED 4B E892        wrch11          ld      bc, (grtbl)   ; address of graphics table
    E8BC  D6 60                             sub     60h           ; adjust for index into table
    E8BE  18 04                             jr      wrch13
    E8C0  ED 4B E890        wrch12          ld      bc, (chtbl)   ; character table
    E8C4  EB                wrch13          ex      de, hl        ; de=posn.in display file
    E8C5  26 00                             ld      h, 0
    E8C7  6F                                ld      l, a          ; code is index into table
    E8C8  29                                add     hl, hl
    E8C9  29                                add     hl, hl
    E8CA  29                                add     hl, hl
    E8CB  09                                add     hl, bc        ; hl=pixel pattern in table
    E8CC  C1                                pop     bc
    E8CD  EB                                ex      de, hl
    E8CE  79                                ld      a, c          ; test if end of line
    E8CF  3D                                dec     a
    E8D0  3A E894                           ld      a, (linlen)
    E8D3  20 05                             jr      nz, wrch14
    E8D5  3C                                inc     a             ; start of new line
    E8D6  05                                dec     b             ; bump line no.
    E8D7  4F                                ld      c, a          ; linlen+1=start of line
    E8D8  18 01                             jr      wrch15
    E8DA  3C                wrch14          inc     a
    E8DB                    wrch15                                ; here to put character in display file
    E8DB  C5                wrch2           push    bc            ; cursor position
```

```
E8DC    E5                                 push    hl              ; display file adrs.
E8DD    3A E899                            ld      a, (maskb)
E8E0    06 FF                              ld      b, -1
E8E2    1F                                 rra
E8E3    38 01                              jr      c, wrch3        ; if xoring new into old
E8E5    04                                 inc     b               ; b=-1 if xoring  =0 if not
E8E6    1F                      wrch3      rra
E8E7    1F                                 rra
E8E8    9F                                 sbc     a, a
E8E9    4F                                 ld      c, a            ; c=-1 for inverse  =0 if not
E8EA    3E 08                              ld      a, 8            ; scan count
E8EC    A7                                 and     a
E8ED    EB                                 ex      de, hl
E8EE    08                      wrch5      ex      af, af'
E8EF    1A                                 ld      a, (de)         ; old bit row
E8F0    A0                                 and     b
E8F1    AE                                 xor     (hl)
E8F2    A9                                 xor     c               ; invert if c=-1
E8F3    12                                 ld      (de), a         ; update display file
E8F4    08                                 ex      af, af'
E8F5    14                                 inc     d               ; next scan
E8F6    23                                 inc     hl              ; next byte in char.file
E8F7    3D                                 dec     a               ; test if more scans
E8F8    20 F4                              jr      nz, wrch5
E8FA    15                      wrch7      dec     d                       ; adjust df adrs.
E8FB    EB                                 ex      de, hl          ; df adrs. to hl
E8FC    CD E9E7                            call    updatt          ; update attribute byte
E8FF    E1                                 pop     hl              ; starting address
E900    C1                                 pop     bc              ; cursor position
E901    0D                                 dec     c               ; adjust cursor position
E902    23                                 inc     hl              ; adjust df address
E903    CD E907                 wrchxt     call    stposn          ; store new position
E906    0E 00                   goodret    ld      c, 0            ; return bc=0
E908    06 00                   errret     ld      b, 0            ; enter here with c non-zero
E90A    E1                                 pop     hl
E90B    D1                                 pop     de
E90C    F1                                 pop     af
E90D    C9                                 ret


                                ;**************************************************************
                                ;
                                ; SET_PRINT_POS
                                ;
                                ; Inputs: B = row
                                ;         C = column
                                ;
                                ; Outputs: BC = 0000 - OK
                                ;
                                ; Globals Read: none.
                                ;
                                ; Globals Written: none.
```

```
                                ;
                                ; Procedures Called: convfm
                                ;                    updposn
                                ;
                                ; Procedures Called By: DISPLAY_CHAR
                                ;                       V_SCROLL
                                ;
                                ; Description: this service sets the print position to the specified row
                                ;              and column.  The row position must be in the range 0..23
                                ;              and the column position must be in the range 0..31.
                                ;
                                ;**************************************************************


E90E    F5                      set_print_pos   push    af
E90F    D5                                      push    de
E910    E5                                      push    hl
E911    CD E990                                 call    convfm          ; entry with line/col. in bc reg.
                                                                        ; convert to internal format
E914    CD E948                                 call    updposn         ; calc. and save the print posn.
E917    0E 00                                   ld      c, 0            ; return bc=0
E919    06 00                                   ld      b, 0            ; enter here with c non-zero
E91B    E1                                      pop     hl
E91C    D1                                      pop     de
E91D    F1                                      pop     af
E91E    C9                                      ret


                                ;**************************************************************
                                ;
                                ; GET_CHAR
                                ;
                                ; Inputs: B = row
                                ;         C = column
                                ;
                                ; Outputs: A = character code, if a chars is found, 0 otherwise
                                ;          BC = 00XX - OK, match found, XX = A
                                ;             = 0000 - OK, no match found
                                ;
                                ; Globals Read: cntbl
                                ;               gtindx
                                ;               crtbl
                                ;               UDG
                                ;
                                ; Globals Written: gtindx
                                ;
                                ; Procedures Called: convfm
                                ;                    calcpos
                                ;
                                ; Procedures Called By: PUT_SPRITE
                                ;
                                ; Description: this service returns the character code of the character
```

```
                  ;               at the specified screen location.  The row and column must
                  ;               be in the range specified above for Set_Print_Pos.
                  ;
                  ;*****************************************************************


E91F   D5         get_char        push    de
E920   E5                         push    hl
E921   CD E99D                    call    convfm          ; entry with position in bc
                                                          ; convert to internal format
E924   CD E9AF                    call    calcpos         ; get display file adrs.
E927   ED 5B E890                 ld      de, (chtbl)     ; char.table
E92B   06 60                      ld      b, 96           ; no. of printable characters
E92D   3E 80                      ld      a, 80h          ; set adjustment index
E92F   32 E89B    gtch1           ld      (gtindx), a
E932   14                         inc     d               ; adjust to start of table
E933   EB                         ex      de, hl          ; df adrs.in de;char.set in hl
E934   C5         gtch2           push    bc              ; save count
E935   D5                         push    de              ; save adrs. in df
E936   E5                         push    hl              ; save adrs. in char.table
E937   1A                         ld      a, (de)         ; scan row from df
E938   AE                         xor     (hl)            ; test against char. set
E939   28 10                      jr      z, gtch3        ; match
E93B   F5                         push    af
E93C   3A E89B                    ld      a, (gtindx)
E93F   FE 90                      cp      90h             ; test if std.graphics
E941   20 03                      jr      nz, gtch23
E943   F1                         pop     af
E944   18 28                      jr      gtch4           ; do not test for inverse
E946   F1         gtch23          pop     af
E947   3C                         inc     a               ; test inverse
E948   20 24                      jr      nz, gtch4
E94A   3D                         dec     a               ; a=-1 for inverse
E94B   4F         gtch3           ld      c, a            ; c=0 for match  -1 for inverse
E94C   06 07                      ld      b, 7
E94E   14         gtch31          inc     d               ; next scan in df
E94F   23                         inc     hl              ; next byte in char.set
E950   1A                         ld      a, (de)
E951   AE                         xor     (hl)
E952   A9                         xor     c
E953   20 19                      jr      nz, gtch4       ; no match
E955   10 F7                      djnz    gtch31          ; for next scan

                                          ; here if match with (sp)=char in char set
                                          ; (sp+2)=char.in display file (sp+5)=char.
                                          ; count

E957   79                         ld      a, c            ; a=-1 if match on inverse
E958   C1                         pop     bc
E959   C1                         pop     bc
E95A   C1                         pop     bc
E95B   4F                         ld      c, a            ; b=count c=-1 if match on inverse
```

```
E95C   3A E89B                    ld      a, (gtindx)     ; adjust char.code
E95F   90                         sub     b               ; a=char.code
E960   FE 20                      cp      20h             ; test if space
E962   20 05                      jr      nz, gtch32
E964   0C                         inc     c               ; test if match on inverse space
E965   20 02                      jr      nz, gtch32
E967   3E 8F                      ld      a, 8fh          ; set code for graphics block
E969   4F         gtch32          ld      c, a
E96A   06 00                      ld      b, 0
E96C   18 2C                      jr      gc_exit         ; char.code in a and in bc

E96E   E1         gtch4           pop     hl              ; here when no match
E96F   11 0008                    ld      de, 8           ; look at next char. in set
E972   19                         add     hl, de          ; char. set
E973   D1                         pop     de              ; char. in df
E974   C1                         pop     bc              ; char.count
E975   10 BD                      djnz    gtch2           ; look again

                                          ; here to test if done

E977   EB                         ex      de, hl          ; df adrs.to hl
E978   3A E89B                    ld      a, (gtindx)
E97B   FE 80                      cp      80h             ; test if std.chr.set
E97D   20 0A                      jr      nz, gtch5       ; try graphics
E97F   ED 5B E892                 ld      de, (grtbl)     ; std.graphics table
E983   06 10                      ld      b, 16           ; no. of entries
E985   3E 90                      ld      a, 90h          ; index
E987   18 A6                      jr      gtch1
E989   FE 90      gtch5           cp      90h             ; test if std.graphics
E98B   20 0B                      jr      nz, gtch6       ; done if not
E98D   ED 5B 5C7B                 ld      de, (UDG)       ; try user-defined graphics area
E991   15                         dec     d               ; adjust address-100h
E992   06 15                      ld      b, 21           ; no of entries
E994   3E A5                      ld      a, 0a5h         ; index
E996   18 97                      jr      gtch1
E998   48         gtch6           ld      c, b            ; here when no match anywhere
E999   AF                         xor     a               ; set bc and a=zero
E99A   E1         gc_exit         pop     hl
E99B   D1                         pop     de
E99C   C9                         ret


                  ;*****************************************************************
                  ;
                  ; CONVFM
                  ;
                  ; Inputs: B = row
                  ;         C = column
                  ;
                  ; Outputs: B = row in internal format
                  ;          C = column in internal format
                  ;
```

```
                        ; Globals Read: linlen
                        ;
                        ; Globals Written: none.
                        ;
                        ; Procedures Called: none.
                        ;
                        ; Procedures Called By: set_print_pos
                        ;                       get_char
                        ;
                        ; Description: this routine converts the row and column as used by
                        ;              Set_Print_Pos and Get_Char into an intenal format used
                        ;              by the other routines in this module.
                        ;
                        ;*******************************************************************


E99D   3A E894          convfm          ld      a, (linlen)
E9A0   3C                               inc     a
E9A1   91                               sub     c
E9A2   4F                               ld      c, a
E9A3   3E 18                            ld      a, scrsz
E9A5   90                               sub     b
E9A6   47                               ld      b, a
E9A7   C9                               ret


                        ;*******************************************************************
                        ;
                        ; UPDPOSN
                        ;
                        ; Inputs: B = row in internal format
                        ;         C = column in internal format
                        ;
                        ; Outputs: none
                        ;
                        ; Globals Read: none.
                        ;
                        ; Globals Written: none.
                        ;
                        ; Procedures Called: calcpos
                        ;                    stposn
                        ;
                        ; Procedures Called By: set_print_pos
                        ;
                        ; Description: this routine set the print position to the specified value.
                        ;
                        ;*******************************************************************


E9A8                    updposn                                 ; enter here with bc=line/col.in
                                                                ; internal format

```

```
E9A8   CD E9AF                          call    calcpos         ; calculate position
E9AB   CD E9D7                          call    stposn          ; store updated position and return
E9AE   C9                               ret


                        ;*******************************************************************
                        ;
                        ; CALCPOS
                        ;
                        ; Inputs: B = row in internal format
                        ;         C = column in internal format
                        ;
                        ; Outputs: HL = address in display file
                        ;
                        ; Globals Read: linlen
                        ;
                        ; Globals Written: none.
                        ;
                        ; Procedures Called: lnbu
                        ;
                        ; Procedures Called By: get_char
                        ;                       updposn
                        ;
                        ; Description: this routine calculates the position in the display file
                        ;              corresponding to the specified row and column position.
                        ;
                        ;*******************************************************************


E9AF   CD E98C          calcpos         call    lnbu            ; get display file adrs.
E9B2   3A E894                          ld      a, (linlen)     ; add column offset
E9B5   3C                               inc     a
E9B6   91                               sub     c
E9B7   5F                               ld      e, a
E9B8   16 00                            ld      d, 0
E9BA   19                               add     hl, de
E9BB   C9                               ret


                        ;*******************************************************************
                        ;
                        ; LNBU
                        ;
                        ; Inputs: B = row in internal format
                        ;
                        ; Outputs: HL = address in display file of start of line B.
                        ;
                        ; Globals Read: VIDMOD
                        ;
                        ; Globals Written: none.
                        ;
                        ; Procedures Called: none.
```

```
                         ;
                         ; Procedures Called By: calcpos
                         ;
                         ; Description: this routine calculates the address of the start of row B
                         ;              in the display file.  This is the first byte of the first
                         ;              scan line.
                         ;
                         ;*******************************************************************


E9BC                     lnbu                                   ; get display file address
                                                                ; for start of line in b
E9BC    3E 18                            ld      a, scrsz
E9BE    90                               sub     b
E9BF    57                               ld      d, a
E9C0    0F                               rrca
E9C1    0F                               rrca
E9C2    0F                               rrca
E9C3    E6 E0                            and     0e0h
E9C5    6F                               ld      l, a
E9C6    7A                               ld      a, d
E9C7    E6 18                            and     18h
E9C9    F6 40                            or      40h
E9CB    67                               ld      h, a
E9CC    3A 5CC2                          ld      a, (VIDMOD)
E9CF    CB 47                            bit     0, a            ; test if df1
E9D1    C9                               ret     z
E9D2    3E 20                            ld      a, 20h          ; set to df2
E9D4    B4                               or      h
E9D5    67                               ld      h, a
E9D6    C9                               ret


                         ;*******************************************************************
                         ;
                         ; STPOSN
                         ;
                         ; Inputs: BC = current print position
                         ;         HL = display file address
                         ;
                         ; Outputs: none
                         ;
                         ; Globals Read: none.
                         ;
                         ; Globals Written: curpos
                         ;                  dfadrs
                         ;
                         ; Procedures Called: none.
                         ;
                         ; Procedures Called By: write_char
                         ;                       updposn
                         ;
```

```
                         ; Description: this routine saves the inputs in the appropriate variables.
                         ;
                         ;*******************************************************************


E9D7                     stposn                                 ; store cursor position
E9D7    ED 43 E895                       ld      (curpos), bc
E9DB    22 E897                          ld      (dfadrs), hl
E9DE    C9                               ret


                         ;*******************************************************************
                         ;
                         ; LDPOSN
                         ;
                         ; Inputs: none.
                         ;
                         ; Outputs: BC = current print position
                         ;          HL = current display file address
                         ;
                         ; Globals Read: curpos
                         ;               dfadrs
                         ;
                         ; Globals Written: none.
                         ;
                         ; Procedures Called: none.
                         ;
                         ; Procedures Called By: write_char
                         ;
                         ; Description: this routine retrieves the current print position and
                         ;              display file address from the appropriate variables.
                         ;
                         ;*******************************************************************


E9DF                     ldposn                                 ; load cursor position
E9DF    ED 4B E895                       ld      bc, (curpos)
E9E3    2A E897                          ld      hl, (dfadrs)
E9E6    C9                               ret


                         ;*******************************************************************
                         ;
                         ; UPDATT
                         ;
                         ; Inputs: HL = address of any scan line of a character position
                         ;
                         ; Outputs: none.
                         ;
                         ; Globals Read: attbyt
                         ;               attmsk
                         ;               maskb
```

```
                ;
                ; Globals Written: none.
                ;
                ; Procedures Called: calcatt
                ;
                ; Procedures Called By: write_char
                ;
                ; Description: this routine updates the attribute byte for the character
                ;              position identified by the address in HL.  The attribute
                ;              value written is taken from the attbyt variable.
                ;
                ;*****************************************************************


E9E7            updatt                          ; update attribute byte for character
                                                ; just printed
                                                ; hl = any scan of char.in df

E9E7  CD EA14             call    calcatt       ; adrs. of attribute byte to hl
E9EA  3A E89A             ld      a, (attbyt)
E9ED  5F                  ld      e, a          ; current attr.value to e
E9EE  3A E89C             ld      a, (attmsk)
E9F1  57                  ld      d, a          ; mask to d
E9F2  3A E899             ld      a, (maskb)
E9F5  47                  ld      b, a          ; flags to b
E9F6  7E                  ld      a, (hl)       ; byte from attribute file
E9F7  AB                  xor     e
E9F8  A2                  and     d
E9F9  AB                  xor     e             ; new attr.for 0: old for 1
E9FA  CB 60               bit     4, b          ; set ink complement of paper?
E9FC  28 08               jr      z, updat1
E9FE  E6 F8               and     0f8h          ; set ink to black
EA00  CB 6F               bit     5, a          ; is paper 4-7
EA02  20 02               jr      nz, updat1    ; yes - use black ink
EA04  F6 07               or      7             ; no -  use white ink
EA06  CB 70     updat1    bit     6, b          ; set paper complement of ink?
EA08  28 08               jr      z, updat2     ;
EA0A  E6 C7               and     0c7h          ; set paper to black
EA0C  CB 57               bit     2, a          ; is ink 4-7
EA0E  20 02               jr      nz, updat2    ; yes - use black paper
EA10  F6 38               or      38h           ; no -  use white paper
EA12  77        updat2    ld      (hl), a       ; to attribute file
EA13  C9                  ret


                ;*****************************************************************
                ;
                ; CALCATT
                ;
                ; Inputs: HL = address of any scan of a character position
                ;
                ; Outputs: HL = address of attribute byte
```

```
                ;
                ; Globals Read: none.
                ;
                ; Globals Written: none.
                ;
                ; Procedures Called: none.
                ;
                ; Procedures Called By: updatt
                ;
                ; Description: this routine calculates the address of the attribute byte
                ;              corresponding to the character position identified with
                ;              HL.
                ;
                ;*****************************************************************


EA14  7C        calcatt   ld      a, h          ; upper byte of address
EA15  0F                  rrca
EA16  0F                  rrca
EA17  0F                  rrca
EA18  E6 03               and     03h
EA1A  F6 58               or      58h
EA1C  CB 6C               bit     5, h          ; test which df
EA1E  28 02               jr      z, calcal
EA20  F6 20               or      20h           ; df2
EA22  67        calcal    ld      h, a          ; adrs. of attribute in df2
EA23  C9                  ret


                ;*****************************************************************
                ;
                ; LDATTR
                ;
                ; Inputs: none.
                ;
                ; Outputs: none.
                ;
                ; Globals Read: ATTR_P
                ;               MASK_P
                ;               P_FLAG
                ;
                ; Globals Written: attbyt
                ;                  attmsk
                ;                  maskb
                ;
                ; Procedures Called: none.
                ;
                ; Procedures Called By: write_char
                ;
                ; Description: this routine sets the values of the variables used by this
                ;              module for manipulating attributes with values from the
                ;              variables used by the Home ROM.
```

```
                  ;
                  ;*********************************************************************

EA24              ldattr                          ; load internal attribute variables
                                                  ; from system variables

EA24  F5                         push   af                  ; save a
EA25  3A 5C8D                    ld     a, (ATTR_P)
EA28  32 E89A                    ld     (attbyt), a
EA2B  3A 5C8E                    ld     a, (MASK_P)
EA2E  32 E89C                    ld     (attmsk), a
EA31  3A 5C91                    ld     a, (P_FLAG)
EA34  0F                         rrca                       ; shift odd bits to even
EA35  32 E899                    ld     (maskb), a
EA38  F1                         pop    af
EA39  C9                         ret


                  ; Standard graphics characters

EA3A  00          grpst   defb 00000000b          ; code 80       graphics space
EA3B  00                  defb 00000000b
EA3C  00                  defb 00000000b
EA3D  00                  defb 00000000b
EA3E  00                  defb 00000000b
EA3F  00                  defb 00000000b
EA40  00                  defb 00000000b
EA41  00                  defb 00000000b

EA42  0F                  defb 00001111b          ; code 81       graphics
EA43  0F                  defb 00001111b
EA44  0F                  defb 00001111b
EA45  0F                  defb 00001111b
EA46  00                  defb 00000000b
EA47  00                  defb 00000000b
EA48  00                  defb 00000000b
EA49  00                  defb 00000000b

EA4A  F0                  defb 11110000b          ; code 82       graphics
EA4B  F0                  defb 11110000b
EA4C  F0                  defb 11110000b
EA4D  F0                  defb 11110000b
EA4E  00                  defb 00000000b
EA4F  00                  defb 00000000b
EA50  00                  defb 00000000b
EA51  00                  defb 00000000b

EA52  FF                  defb 11111111b          ; code 83       graphics
EA53  FF                  defb 11111111b
EA54  FF                  defb 11111111b
EA55  FF                  defb 11111111b
```

```
EA56  00                  defb 00000000b
EA57  00                  defb 00000000b
EA58  00                  defb 00000000b
EA59  00                  defb 00000000b

EA5A  00                  defb 00000000b          ; code 84       graphics
EA5B  00                  defb 00000000b
EA5C  00                  defb 00000000b
EA5D  00                  defb 00000000b
EA5E  0F                  defb 00001111b
EA5F  0F                  defb 00001111b
EA60  0F                  defb 00001111b
EA61  0F                  defb 00001111b

EA62  0F                  defb 00001111b          ; code 85       graphics
EA63  0F                  defb 00001111b
EA64  0F                  defb 00001111b
EA65  0F                  defb 00001111b
EA66  0F                  defb 00001111b
EA67  0F                  defb 00001111b
EA68  0F                  defb 00001111b
EA69  0F                  defb 00001111b

EA6A  F0                  defb 11110000b          ; code 86        graphics
EA6B  F0                  defb 11110000b
EA6C  F0                  defb 11110000b
EA6D  F0                  defb 11110000b
EA6E  0F                  defb 00001111b
EA6F  0F                  defb 00001111b
EA70  0F                  defb 00001111b
EA71  0F                  defb 00001111b

EA72  FF                  defb 11111111b          ;code 87        graphics
EA73  FF                  defb 11111111b
EA74  FF                  defb 11111111b
EA75  FF                  defb 11111111b
EA76  0F                  defb 00001111b
EA77  0F                  defb 00001111b
EA78  0F                  defb 00001111b
EA79  0F                  defb 00001111b

EA7A  00                  defb 00000000b          ; code 88       graphics
EA7B  00                  defb 00000000b
EA7C  00                  defb 00000000b
EA7D  00                  defb 00000000b
EA7E  F0                  defb 11110000b
EA7F  F0                  defb 11110000b
EA80  F0                  defb 11110000b
EA81  F0                  defb 11110000b

EA82  0F                  defb 00001111b          ; code 89        graphics
EA83  0F                  defb 00001111b
```

```
EA84    0F                  781            defb 00001111b
EA85    0F                  782            defb 00001111b
EA86    F0                  783            defb 11110000b
EA87    F0                  784            defb 11110000b
EA88    F0                  785            defb 11110000b
EA89    F0                  786            defb 11110000b
                            787
EA8A    F0                  788            defb 11110000b           ; code 8A        graphics
EA8B    F0                  789            defb 11110000b
EA8C    F0                  790            defb 11110000b
EA8D    F0                  791            defb 11110000b
EA8E    F0                  792            defb 11110000b
EA8F    F0                  793            defb 11110000b
EA90    F0                  794            defb 11110000b
EA91    F0                  795            defb 11110000b
                            796
EA92    FF                  797            defb 11111111b           ; code 8B        graphics
EA93    FF                  798            defb 11111111b
EA94    FF                  799            defb 11111111b
EA95    FF                  800            defb 11111111b
EA96    F0                  801            defb 11110000b
EA97    F0                  802            defb 11110000b
EA98    F0                  803            defb 11110000b
EA99    F0                  804            defb 11110000b
                            805
EA9A    00                  806            defb 00000000b           ; code 8C        graphics
EA9B    00                  807            defb 00000000b
EA9C    00                  808            defb 00000000b
EA9D    00                  809            defb 00000000b
EA9E    FF                  810            defb 11111111b
EA9F    FF                  811            defb 11111111b
EAA0    FF                  812            defb 11111111b
EAA1    FF                  813            defb 11111111b
                            814
EAA2    0F                  815            defb 00001111b           ; code 8D        graphics
EAA3    0F                  816            defb 00001111b
EAA4    0F                  817            defb 00001111b
EAA5    0F                  818            defb 00001111b
EAA6    FF                  819            defb 11111111b
EAA7    FF                  820            defb 11111111b
EAA8    FF                  821            defb 11111111b
EAA9    FF                  822            defb 11111111b
                            823
EAAA    F0                  824            defb 11110000b           ;code 8E         graphics
EAAB    F0                  825            defb 11110000b
EAAC    F0                  826            defb 11110000b
EAAD    F0                  827            defb 11110000b
EAAE    FF                  828            defb 11111111b
EAAF    FF                  829            defb 11111111b
EAB0    FF                  830            defb 11111111b
EAB1    FF                  831            defb 11111111b
                            832
```

```
EAB2    FF                  833            defb 11111111b           ;code 8F         graphics
EAB3    FF                  834            defb 11111111b
EAB4    FF                  835            defb 11111111b
EAB5    FF                  836            defb 11111111b
EAB6    FF                  837            defb 11111111b
EAB7    FF                  838            defb 11111111b
EAB8    FF                  839            defb 11111111b
EAB9    FF                  840            defb 11111111b
                            841
                            842
                            843            end
```

```
A        Reserved      ATTBYT   E89A         ATTMSK   E89C         ATTRSP   5C8D         B        Reserved
C        Reserved      CALCAT   EA14         CALCA1   EA22         CALCPO   E9AF         CHRSET   3C00
CHTBL     E890         CONVFM   E99D         CURPOS   E895         D        Reserved     DFADRS   E897
E        Reserved      ERRRET   E908         GCSEXI   E99A         GETSCH   E91F         GOODRE   E906
GRPHST    E93A         GRPST    EA3A         GRTBL    E892         GTCH1    E92F         GTCH2    E934
GTCH23    E946         GTCH3    E94B         GTCH31   E94E         GTCH32   E969         GTCH4    E96E
GTCH5     E989         GTCH6    E998         GTINCR   E898         H        Reserved     L        Reserved
LDATTR    EA24         LDPOSN   E9DF         LINLEN   E894         LNBU     E9BC         M        Reserved
MASKB     E899         MASKSF   5C8E         PSW     Reserved      PSFLAG   5C91         SCRSZ    0018
SETSPR    E90E         SP      Reserved      STPOSN   E907         UDG      5C7B         UPDATT   E9E7
UPDAT1    EA06         UPDAT2   EA12         UPDPCS   E9A8         VIDMOD   5CC2         WRCHXT   E903
WRCH01    E8A3         WRCH11   E8B8         WRCH12   E8C0         WRCH13   E8C4         WRCH14   E8DA
WRCH15    E8DB         WRCH2    E8D8         WRCH3    E8E6         WRCH5    E8EE         WRCH7    E8FA
WRITCS    E89D

      No errors detected
```

APPENDIX D

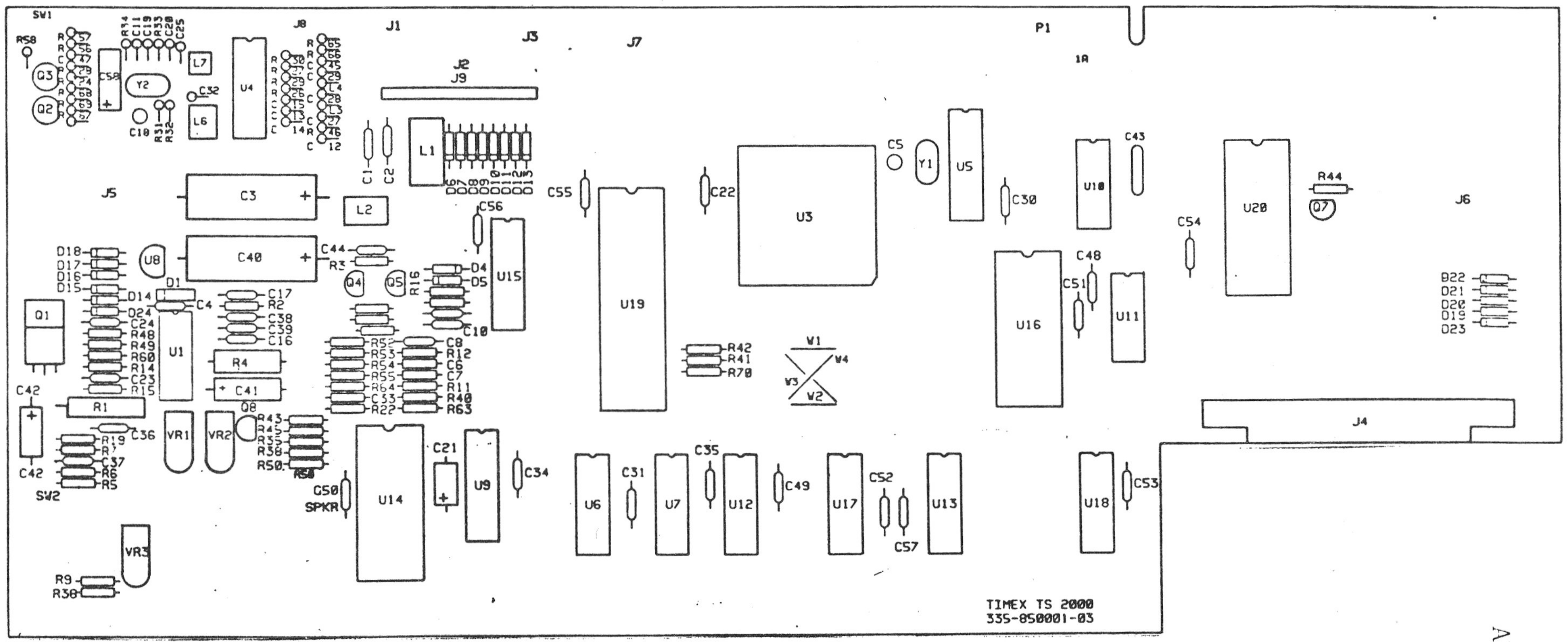
SW1
R58
Q3
Q2
C58
Y2
C18
R31
R32
C32
L7
L6
U4
J8
J1
J2
J9
J3
J7
P1
1A
J5
C3
C40
L2
L1
C1
C2
C44
R3
C56
C55
U15
U19
C22
U3
C5
Y1
U5
C30
U10
C43
C54
U20
R44
Q7
J6
C48
C51
U16
U11
D22
D21
D20
D19
D23
J4
D18
D17
D16
D15
U8
D1
D14
D24
C4
C24
R48
R49
R60
R14
C23
R15
Q1
U1
C17
R2
C38
C39
C16
R4
C41
Q4
Q5
R16
D4
D5
C10
R52
R53
R54
R55
R64
C33
R22
C8
R12
C6
C7
R11
R40
R63
R42
R41
R70
V1
V4
V3
V2
C42
R1
R19
R7
C37
R6
R5
C36
SW2
VR1
VR2
Q8
R43
R45
R35
R38
R50
C50
SPKR
U14
C21
U9
C34
U6
C31
U7
C35
U12
C49
U17
C52
C57
U13
U18
C53
VR3
R9
R30
TIMEX TS 2000
335-850001-03

TS2068 PC BOARD COMPONENT LAYOUT

APPENDIX D

TS2068 PARTS LIST

DESCRIPTION	COMPONENT DESIGNATION	QTY PER ASSY	COMMENTS
P.C.B. (Fabrication and Artwork)			REV 3A
CAP. 0.1 uf, Ceramic, Axial TEMP Z5U	C2,7,9,16,24,30 31,34,35,37,39,43 44,48,49,50,51,52 53,54,55,56,57	23	-20 +80% or GMV
CAP. 0.01 uf, Ceramic,Axial	C11,12,14,33,61 62,68,69	8	-20 +80% or GMV TEMP Z5U
CAP. 0.001 uf, Ceramic, Axial	C8,45,46,47	4	-20 +80% or GMV TEMP Z5U
CAP. 0.047 uf, Ceramic, Axial	C10,15,74,75	4	-20 +80% or GMV TEMP Z5U
CAP. 20pf Ceramic Axial	C23	1	-20 +80% or GMV TEMP Z5U
CAP. 39pf Ceramic Axial	C20	1	NPO
CAP. 43pf Ceramic Axial	C19	1	NPO
CAP. 56pf Ceramic Axial	C25	1	NPO
CAP. 75pf Ceramic Axial	C32	1	NPO
CAP.120pf Ceramic Disc	C59,63,64,65,72 73	6	-20 +80% or GMV TEMP Z5U
CAP.470uf, 25V AL Electrolytic Axial	C3	1	
CAP. 1 uf, 16V MIN AL Electrolytic Axial	C21	1	
CAP. 47 uf, 16V MIN AL Electrolytic Axial or Radial	C41	1	
CAP. 1000 uf, 12V MIN AL Electrolytic Axial	C40	1	LOW ESR
CAP. 1000 pf, 50V MIN FILM MYLAR	C36	1	+/- 20%
CAP. 100 uf, 10V MIN AL Electrolytic Axial	C58,67	2	
CAP. 6-50 pf, TRIMMER	C5,18	2	NPO
CAP. 0.47 uf Ceramic Axial	C60	1	-20 +80% or GMV TEMP Z5U
CAP. 33 uf TANTALUM	C71	1	+/- 20%

APPENDIX D

TS2068 PARTS LIST
(continued)

DESCRIPTION	COMPONENT DESIGNATION	QTY PER ASSY	COMMENTS
CAP. 68 pf Ceramic Axial	C70	1	-20 +80% or GMV TEMP Z5U
CAP. 24 pf Ceramic Axial	C29,27	2	-20 +80% or GMV TEMP Z5U
CAP. 47 pf Ceramic Axial	C28	1	-20 +80% or GMV TEMP Z5U
RES. 300 OHM, 1/4W, +/-5%, CF	R23	1	
RES. 200 OHM, 1/4W, +/-5%, CF	R19,50,54,55	4	
RES. 100 OHM, 1/4W, +/-5%, CF	R58	1	
RES. 240 OHM, 1/4W, +/-5%, CF	R24,28,56,57	4	
RES. 68 OHM, 1/4W, +/-5%, CF	R2	1	
RES. 680 OHM, 1/4W, +/-5%, CF	R13,68	2	
RES. 390 OHM, 1/4W, +/-5%, CF	R74	1	
RES. 1K OHM, 1/4W, +/-5%, CF	R11,33,34,35,36 38,42,62	8	
RES.1.5K OHM, 1/4W, +/-5%, CF	R41	1	
RES.1.8K OHM, 1/4W, +/-5%, CF	R29,30	2	
RES. 620 OHM, 1/4W, +/-5%, CF	R52	1	
RES. 2K OHM, 1/4W, +/-5%, CF	R22	1	
RES. 3K OHM, 1/4W, +/-5%, CF	R32	1	
RES.2.2K OHM, 1/4W, +/-5%, CF	R61	1	
RES. 110 OHM, 1/4W, +/-5%, CF	R53	1	
RES. 510 OHM, 1/4W, +/-5%, CF	R69	1	
RES.5.1K OHM, 1/4W, +/-5%, CF	R31	1	
RES. 10K OHM, 1/4W, +/-5%, CF	R16,40,60,70	4	
RES. 13K OHM, 1/4W, +/-5%, CF	R26,27	2	
RES. 20K OHM, 1/4W, +/-5%, CF	R44,45	2	
RES 62K OHM, 1/4W, +/-5%, CF	R9,73	2	
RES.100K OHM, 1/4W, +/-5%, CF	R15,49	2	
RES.220K OHM, 1/4W, +/-5%, CF	R43	1	
RES. 75 OHM, 1/4W, +/-5%, CF	R46,67	2	
RES.1.10K OHM 1/4W, +/-1%, MF	R6	1	
RES.3.32K OHM 1/4W, +/-1%, MF	R5	1	
RES. 10K OHM, VARIABLE, LINEAR	VR1,2,3	3	
RES. 330 OHM, 0.5W, +/-5%, CF	R4	1	
RES. 56 OHM, 1/4W, +/-5%, CF	R65,71	2	
RES. 0.110 OHM, 3W, +/-5%, Wire Wound	R1	1	
RES. 20 OHM, 1/4W, +/-5%, CF	R63	1	
RES. 82 OHM, 1/4W, +/-5%, CF	R64	1	
RES. 22 OHM, 1/4W, +/-5%, CF	R66	1	
RES.680K OHM, 1/4W, +/-5%, CF	R14	1	
RES. 47K OHM, 1/4W, +/-5%, CF	R48	1	
RES.390K OHM, 1/4W, +/-5%, CF	R72	1	
RES.6.8K OHM, 1/4W, +/-5%, CF	R12	1	

APPENDIX D

TS2068 PARTS LIST
(continued)

DESCRIPTION	COMPONENT DESIGNATION	QTY PER ASSY	COMMENTS
DIODE 1N4148	CR4,5,6,7,8,9,10 11,12,13,14,15,16 17,18,19,20,21,22 23,24,25,26,27,28	25	
DIODE, Schottky 1N5821 or equivalent	CR1	1	
IC, UA 78S40 NPC, Switching Regulator	U1	1	
IC, SCLD	U3	1	
IC, LM1889N, Video Modulator	U4	1	
IC, 74LS244N	U5	1	
IC, TMS4416-15 (150NS) MOS Dynamic RAM	U6,7	2	
IC, UA 78L12 Regulator	U8	1	
IC, 74LS245	U9,15	2	
IC,74LS157N	U10,11	2	
IC,TMS4416-20 (200NS) MOS Dynamic RAM	U12,13,17,18	4	
IC,AY-3-8912, Sound Gen.and I/O Port	U14	1	
IC,23128 Mask ROM (16K X 8)	U16	1	
IC, CPU Z80A	U19	1	
IC, 2364 Mask ROM (8K X 8)	U20	1	
IC, 74LS00	U21	1	
TRAN. PNP D43C1	Q1	1	
TRAN. PNP 2N2907	Q3	1	
TRAN. PNP 2N3904	Q7,8	2	
TRAN. PNP 2N2222	Q5,4,2	3	

APPENDIX D

TS2068 PARTS LIST
(continued)

DESCRIPTION	COMPONENT DESIGNATION	QTY PER ASSY	COMMENTS
EMI Filter(Bifiler) 2.2mh	L1	1	
Inductor 230 uh	L2	1	
Inductor .33uh Axial	L3,4	2	
Inductor .12uh	L6,7	2	
Crystal Oscillator 14.112 MHz	Y1	1	
Crystal Oscillator 3.579545 MHz	Y2	1	
Switch SPDT, Rocker	SW2	1	
Switch Channel Select, SPDT Slide	SW1	1	
Video Jack Insulation Pad		1	Under J7
Jack, Right Angle RCA Video Jack	J7	1	Monitor
Jack, Mini Phone, EAR & MIC	J2,3	2	Tape
Jack, COAX, DC Power, 2 1/2 MM Pin	J1	1	
Jack, Phono	J8	1	Assembled to Shield, R.F.
Connector,Cartridge 2 X 18 Pin 0.1" Space	J4	1	Key between Contact 4&6
Connector,Flex Cable 14 Pin	J9	1	Keyboard
Connector,Joystick 9-Pin Male (D Type)	J5,6	2	Joysticks
Shield, R.F. Button		1	
Shield, R.F. Top		1	
Heat Sink	HS1	1	
Heat Sink Insulation Pad			

APPENDIX D

TS2068 PARTS LIST
(continued)

DESCRIPTION	COMPONENT DESIGNATION	QTY PER ASSY	COMMENTS
Socket, IC, 28 Pin		2	
Socket, IC, 40 Pin		1	
Speaker, 45 OHM, Mylar Cone		1	
Jumper Wire	W1, 2, 50	3	
Ferrite Bead	L5,8	2	
PC Board Assembly,Daughter		1	

RESTRICTED INFORMATION

DWG. NO. 335-870500

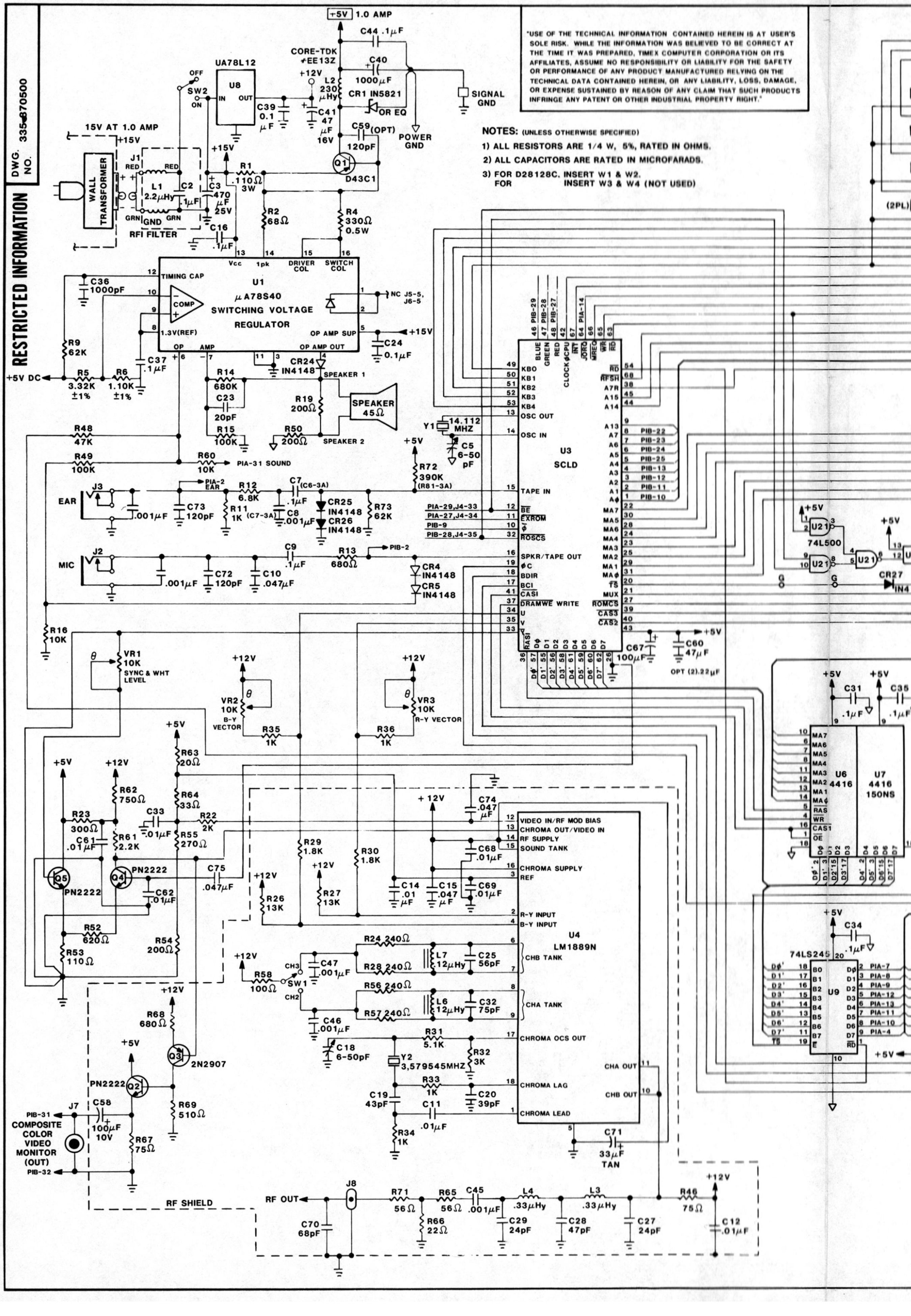
+5V 1.0 AMP
C44 .1µF
CORE-TDK EE13Z
C40 1000µF
UA78L12
U8
IN OUT
SW2 OFF ON
+12V
L2 230 µHy
CR1 IN5821 OR EQ
SIGNAL GND
POWER GND
C39 0.1 µF
C41 47 µF 16V
C59 (OPT) 120pF
Q1 D43C1
15V AT 1.0 AMP
+15V
WALL TRANSFORMER
J1 RED
L1 2.2µHy
C2 .1µF
C3 470 25V
GRN GND GRN
RFI FILTER
R1 .110Ω 3W
R2 68Ω
R4 330Ω 0.5W
C16 .1µF
C36 1000pF
TIMING CAP
U1 µA78S40 SWITCHING VOLTAGE REGULATOR
COMP
1.3V(REF)
Vcc 1pk DRIVER COL SWITCH COL
OP AMP SUP
OP AMP OUT
NC J5-5, J6-5
C24 0.1µF
R9 62K
C37 .1µF
+5V DC
R5 3.32K ±1%
R6 1.10K ±1%
CR24 IN4148
R14 680K
C23 20pF
R15 100K
R19 200Ω
SPEAKER 45Ω
SPEAKER 1
SPEAKER 2
R50 200Ω
R48 47K
R49 100K
R60 10K
PIA-31 SOUND
EAR J3
PIA-2 EAR
R12 6.8K
C7 .1µF (C6-3A)
R11 1K (C7-3A)
C8 .001µF
C73 120pF
.001µF
CR25 IN4148
CR26 IN4148
R73 62K
R72 390K (R81-3A)
Y1 14.112 MHZ
C5 6-50 pF
MIC J2
C72 120pF
C10 .047µF
C9 .1µF
R13 680Ω
PIB-2
CR4 IN4148
CR5 IN4148
R16 10K
U3 SCLD
KB0 KB1 KB2 KB3 KB4
OSC OUT
OSC IN
TAPE IN
BE
EXROM
ROSCS
SPKR/TAPE OUT
ϕC
BDIR
BCI
CASI
DRAMWE WRITE
U V RASI
PIA-29,J4-33
PIA-27,J4-34
PIB-9
PIB-28,J4-35
BLUE GREEN RED CLOCK ϕCPU INT IORQ MREQ WR RD
PIB-29 PIB-28 PIB-27 PIA-14
RD RFSH A7R A15 A14 A13 A7 A6 A5 A4 A3 A2 A1 Aϕ
PIB-22 PIB-23 PIB-24 PIB-25 PIB-13 PIB-12 PIB-11 PIB-10
MA7 MA5 MA6 MA4 MA3 MA2 MA1 MAϕ
TS MUX ROMCS CAS3 CAS2
Dϕ D1 D2 D3 D4 D5 D6 D7
Dϕ' D1' D2' D3' D4' D5' D6' D7'
C67 100µF
C60 47µF
OPT (2).22µF
+5V
U21 74L500
CR27 IN4
(2PL)
VR1 10K SYNC & WHT LEVEL
VR2 10K B-Y VECTOR
VR3 10K R-Y VECTOR
R35 1K
R36 1K
R63 20Ω
R64 33Ω
R62 750Ω
R23 300Ω
C61 .01µF
R61 2.2K
C33 .01µF
R22 2K
R55 270Ω
Q5 PN2222
Q4 PN2222
C62 .01µF
C75 .047µF
R52 620Ω
R53 110Ω
R54 200Ω
R29 1.8K
R30 1.8K
R26 13K
R27 13K
C14 .01 µF
C15 .047 µF
C74 .047 µF
C68 .01µF
C69 .01µF
U4 LM1889N
VIDEO IN/RF MOD BIAS
CHROMA OUT/VIDEO IN
RF SUPPLY
SOUND TANK
CHROMA SUPPLY
REF
R-Y INPUT
B-Y INPUT
CHB TANK
CHA TANK
CHROMA OCS OUT
CHROMA LAG
CHROMA LEAD
CHA OUT
CHB OUT
R24 240Ω
R28 240Ω
L7 12µHy
C25 56pF
R56 240Ω
R57 240Ω
L6 12µHy
C32 75pF
C47 .001µF
C46 .001µF
R58 100Ω
SW1 CH3 CH2
R31 5.1K
R32 3K
C18 6-50pF
Y2 3,579545MHZ
R33 1K
C19 43pF
C20 39pF
C11 .01µF
R34 1K
C71 33µF TAN
R68 680Ω
Q3 2N2907
Q2 PN2222
R69 510Ω
J7
PIB-31
C58 100µF 10V
R67 75Ω
COMPOSITE COLOR VIDEO MONITOR (OUT)
PIB-32
RF SHIELD
RF OUT
J8
C70 68pF
R71 56Ω
R66 22Ω
R65 56Ω
C45 .001µF
C29 24pF
L4 .33µHy
C28 47pF
L3 .33µHy
C27 24pF
R46 75Ω
C12 .01µF
C31 .1µF
C35 .1µF
U6 4416
U7 4416 150NS
MA7 MA6 MA5 MA4 MA3 MA2 MA1 MAϕ RAS WR CAS1 OE
C34 .1µF
74LS245 U9
B0 B1 B2 B3 B4 B5 B6 B7 E
Dϕ D1 D2 D3 D4 D5 D6 D7 RD
PIA-7 PIA-8 PIA-9 PIA-12 PIA-13 PIA-11 PIA-10 PIA-4

"USE OF THE TECHNICAL INFORMATION CONTAINED HEREIN IS AT USER'S SOLE RISK. WHILE THE INFORMATION WAS BELIEVED TO BE CORRECT AT THE TIME IT WAS PREPARED, TIMEX COMPUTER CORPORATION OR ITS AFFILIATES, ASSUME NO RESPONSIBILITY OR LIABILITY FOR THE SAFETY OR PERFORMANCE OF ANY PRODUCT MANUFACTURED RELYING ON THE TECHNICAL DATA CONTAINED HEREIN, OR ANY LIABILITY, LOSS, DAMAGE, OR EXPENSE SUSTAINED BY REASON OF ANY CLAIM THAT SUCH PRODUCTS INFRINGE ANY PATENT OR OTHER INDUSTRIAL PROPERTY RIGHT."

NOTES: (UNLESS OTHERWISE SPECIFIED)

1) ALL RESISTORS ARE 1/4 W, 5%, RATED IN OHMS.
2) ALL CAPACITORS ARE RATED IN MICROFARADS.
3) FOR D28128C, INSERT W1 & W2.
FOR INSERT W3 & W4 (NOT USED)

BRUNING 44-131 22870 3

CHANGES			
ISSUE NO.	C.O. NO.	DATE	DESCRIPTION

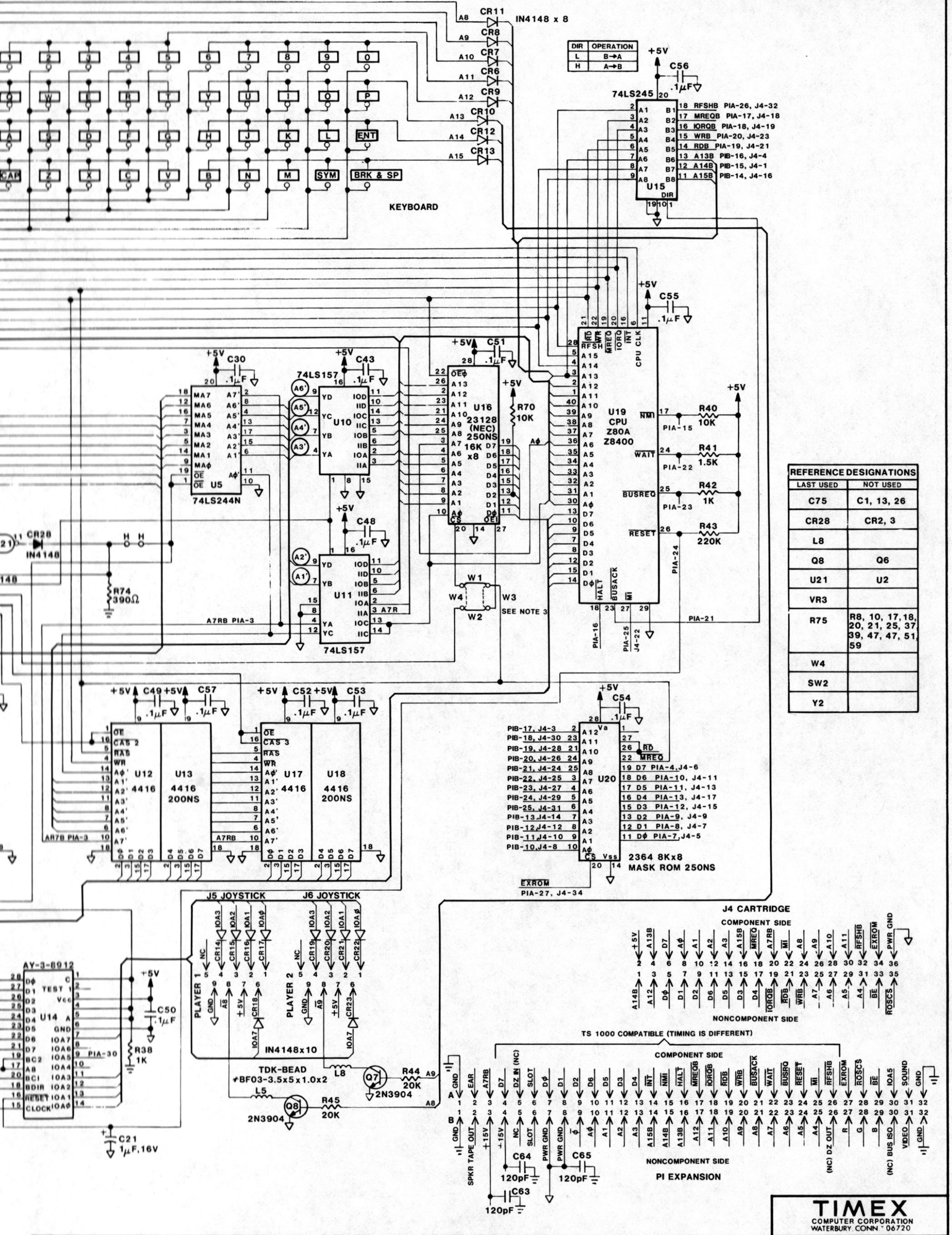
CR11
IN4148 x 8
A8
A9
A10
A11
A12
A13
A14
A15
CR8
CR7
CR6
CR9
CR10
CR12
CR13
1
2
3
4
5
6
7
8
9
0
Q
W
E
R
T
Y
U
I
O
P
A
S
D
F
G
H
J
K
L
ENT
CAP
Z
X
C
V
B
N
M
SYM
BRK & SP
KEYBOARD
DIR
OPERATION
L
B→A
H
A→B
+5V
C56
.1μF
74LS245
U15
DIR
18 RFSHB PIA-26, J4-32
17 MREQB PIA-17, J4-18
16 IORQB PIA-18, J4-19
15 WRB PIA-20, J4-23
14 RDB PIA-19, J4-21
13 A13B PIB-16, J4-4
12 A14B PIB-15, J4-1
11 A15B PIB-14, J4-16
C55
U19
CPU
Z80A
Z8400
CPU CLK
NMI
WAIT
BUSREQ
RESET
HALT
BUSACK
M1
RD
WR
MREQ
IORQ
INT
RFSH
R40 10K
R41 1.5K
R42 1K
R43 220K
PIA-15
PIA-22
PIA-23
PIA-24
PIA-21
PIA-16
PIA-25
J4-22
U16
23128
(NEC)
250NS
16K x8
R70 10K
C51
C30
C43
C48
74LS244N
U5
74LS157
U10
U11
A7RB PIA-3
3 A7R
W1
W2
W3
W4
SEE NOTE 3
CR28
IN4148
R74 390Ω
H H
C49
C57
C52
C53
U12 4416
U13 4416 200NS
U17 4416
U18 4416 200NS
AR7B PIA-3
A7RB
C54
U20
2364 8Kx8
MASK ROM 250NS
EXROM
PIA-27, J4-34
PIB-17, J4-3
PIB-18, J4-30
PIB-19, J4-28
PIB-20, J4-26
PIB-21, J4-24
PIB-22, J4-25
PIB-23, J4-27
PIB-24, J4-29
PIB-25, J4-31
PIB-13 J4-14
PIB-12 J4-12
PIB-11 J4-10
PIB-10 J4-8
D7 PIA-4, J4-6
D6 PIA-10, J4-11
D5 PIA-11, J4-13
D4 PIA-13, J4-17
D3 PIA-12, J4-15
D2 PIA-9, J4-9
D1 PIA-8, J4-7
D0 PIA-7, J4-5
J5 JOYSTICK
J6 JOYSTICK
PLAYER 1
PLAYER 2
IN4148x10
TDK-BEAD
BF03-3.5x5x1.0x2
L8
L5
Q7
Q8
2N3904
R44 20K
R45 20K
AY-3-8912
U14
C50 .1μF
R38 1K
PIA-30
C21 1μF,16V
J4 CARTRIDGE
COMPONENT SIDE
NONCOMPONENT SIDE
TS 1000 COMPATIBLE (TIMING IS DIFFERENT)
PI EXPANSION
C63 120pF
C64 120pF
C65 120pF

REFERENCE DESIGNATIONS	
LAST USED	NOT USED
C75	C1, 13, 26
CR28	CR2, 3
L8	
Q8	Q6
U21	U2
VR3	
R75	R8, 10, 17, 18, 20, 21, 25, 37, 39, 47, 47, 51, 59
W4	
SW2	
Y2	

TIMEX
COMPUTER CORPORATION
WATERBURY CONN 06720

THIS PRINT, AND THE INFORMATION IT GIVES ARE THE PROPERTY OF TIMEX CORPORATION THE PRINT IS NOT TRANSFERABLE AND IT AND ANY COPIES ARE TO BE RETURNED UPON COMPLETION OF THE CORRESPONDENCE OR ORDER THE INFORMATION [illegible] GIVEN IN [illegible]DENCE FOR A LIMITED PUR[illegible] VULGED AND IS NOT TO [illegible] THAT PURPOSE

MATERIAL		DO NOT SCALE DRAWING			NAME TS2000 SYSTEM SCHEMATIC DIAGRAM
SPEC		CHK	DWN N PARSONS		
SIZE & TOL		REF	DATE FEB 84		DWG. NO. 335-870500
TEMPER		FIRST USED ON M2068	SCALE NONE	SUPERSEDES	
PHY SPEC				SUPERSEDED BY	